KONICA MINOLTA

SERVICE MANUAL

FIELD SERVICE

bizhub C652/C552/C452

This service manual is designed for machine with firmware card ver. 47 and onward.

2009.07
KONICA MINOLTA BUSINESS TECHNOLOGIES, INC. Ver. 2.0

FIELD SERVICE TOTAL CONTENTS

SAFETY AND IMPORTANT WARNING ITEMS S-1
- IMPORTANT NOTICE S-1
- DESCRIPTION ITEMS FOR DANGER, WARNING AND CAUTION S-1
- SAFETY WARNINGS S-2
- WARNING INDICATIONS ON THE MACHINE S-18

MEASURES TO TAKE IN CASE OF AN ACCIDENT S-21

Composition of the service manual C-1

Notation of the service manual C-2

bizhub C652/C552/C452 Main body

- OUTLINE 1
- MAINTENANCE 17
- ADJUSTMENT/SETTING 253
- TROUBLESHOOTING 657
- APPENDIX 917

i-Option LK-101 v2/102/103 v2/105

- OUTLINE 1
- ADJUSTMENT/SETTING 3
- TROUBLESHOOTING 21

DF-618/SP-501

- OUTLINE 1
- MAINTENANCE 5
- ADJUSTMENT/SETTING 33

LU-301

- OUTLINE 1
- MAINTENANCE 3
- ADJUSTMENT/SETTING 29

LU-204

- OUTLINE 1
- MAINTENANCE 3
- ADJUSTMENT/SETTING 31

JS-504

- OUTLINE 1
- MAINTENANCE 3

ZU-606

OUTLINE 1
MAINTENANCE 5
ADJUSTMENT/SETTING 27

FS-526

OUTLINE 1
MAINTENANCE 5

SD-508

OUTLINE 1
MAINTENANCE 3
ADJUSTMENT/SETTING 19

PK-516

OUTLINE 1
MAINTENANCE 3
ADJUSTMENT/SETTING 11

JS-602

OUTLINE 1
MAINTENANCE 3

PI-505

OUTLINE 1
MAINTENANCE 3
ADJUSTMENT/SETTING 17

FS-527

OUTLINE 1
MAINTENANCE 5

PK-517

OUTLINE 1
MAINTENANCE 3
ADJUSTMENT/SETTING 7

SD-509

OUTLINE 1
MAINTENANCE 3
ADJUSTMENT/SETTING 21

JS-603

OUTLINE 1
MAINTENANCE 3

Blank Page

SAFETY AND IMPORTANT WARNING ITEMS

Read carefully the safety and important warning items described below to understand them before doing service work.

IMPORTANT NOTICE

Because of possible hazards to an inexperienced person servicing this product as well as the risk of damage to the product, KONICA MINOLTA BUSINESS TECHNOLOGIES, INC. (hereafter called the KMBT) strongly recommends that all servicing be performed only by KMBT-trained service technicians.
Changes may have been made to this product to improve its performance after this Service Manual was printed. Accordingly, KMBT does not warrant, either explicitly or implicitly, that the information contained in this service manual is complete and accurate.
The user of this service manual must assume all risks of personal injury and/or damage to the product while servicing the product for which this service manual is intended.
Therefore, this service manual must be carefully read before doing service work both in the course of technical training and even after that, for performing maintenance and control of the product properly.
Keep this service manual also for future service.

DESCRIPTION ITEMS FOR DANGER, WARNING AND CAUTION

In this Service Manual, each of three expressions "⚠ DANGER", "⚠ WARNING", and "⚠ CAUTION" is defined as follows together with a symbol mark to be used in a limited meaning.
When servicing the product, the relevant works (disassembling, reassembling, adjustment, repair, maintenance, etc.) need to be conducted with utmost care.

⚠ **DANGER: Action having a high possibility of suffering death or serious injury**

⚠ **WARNING: Action having a possibility of suffering death or serious injury**

⚠ **CAUTION: Action having a possibility of suffering a slight wound, medium trouble, and property damage**

Symbols used for safety and important warning items are defined as follows:

△ :Precaution when servicing the product.

⃠ :Prohibition when servicing the product.

● :Direction when servicing the product.

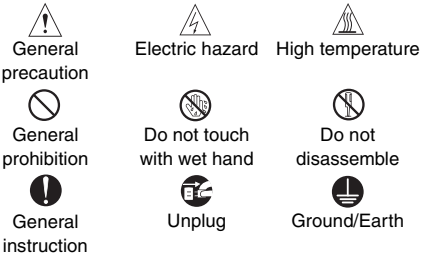

SAFETY WARNINGS

[1] MODIFICATIONS NOT AUTHORIZED BY KONICA MINOLTA BUSINESS TECHNOLOGIES, INC.

KONICA MINOLTA brand products are renowned for their high reliability. This reliability is achieved through high-quality design and a solid service network.
Product design is a highly complicated and delicate process where numerous mechanical, physical, and electrical aspects have to be taken into consideration, with the aim of arriving at proper tolerances and safety factors. For this reason, unauthorized modifications involve a high risk of degradation in performance and safety. Such modifications are therefore strictly prohibited. the points listed below are not exhaustive, but they illustrate the reasoning behind this policy.

Prohibited Actions

⚠ DANGER

- Using any cables or power cord not specified by KMBT.

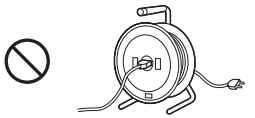

- Using any fuse or thermostat not specified by KMBT. Safety will not be assured, leading to a risk of fire and injury.

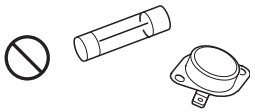

- Disabling fuse functions or bridging fuse terminals with wire, metal clips, solder or similar object.

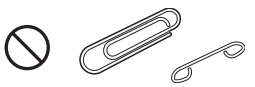

- Disabling relay functions (such as wedging paper between relay contacts)

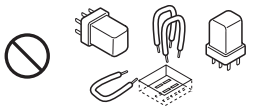

- Disabling safety functions (interlocks, safety circuits, etc.) Safety will not be assured, leading to a risk of fire and injury.

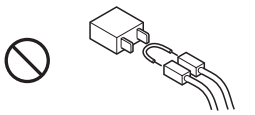

- Making any modification to the product unless instructed by KMBT

- Using parts not specified by KMBT

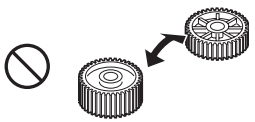

[2] POWER PLUG SELECTION

In some countries or areas, the power plug provided with the product may not fit wall outlet used in the area. In that case, it is obligation of customer engineer (hereafter called the CE) to attach appropriate power plug or power cord set in order to connect the product to the supply.

Power Cord Set or Power Plug

⚠WARNING

- Use power supply cord set which meets the following criteria:
  - provided with a plug having configuration intended for the connection to wall outlet appropriate for the product's rated voltage and current, and
  - the plug has pin/terminal(s) for grounding, and
  - provided with three-conductor cable having enough current capacity, and
  - the cord set meets regulatory requirements for the area.

  Use of inadequate cord set leads to fire or electric shock.

- Attach power plug which meets the following criteria:
  - having configuration intended for the connection to wall outlet appropriate for the product's rated voltage and current, and
  - the plug has pin/terminal(s) for grounding, and
  - meets regulatory requirements for the area.

  Use of inadequate cord set leads to the product connecting to inadequate power supply (voltage, current capacity, grounding), and may result in fire or electric shock.

- Conductors in the power cable must be connected to terminals of the plug according to the following order:
  - •Black or Brown:L (line)
  - •White or Light Blue:N (neutral)
  - •Green/Yellow:PE (earth)

  Wrong connection may cancel safeguards within the product, and results in fire or electric shock.

[3] CHECKPOINTS WHEN PERFORMING ON-SITE SERVICE

KONICA MINOLTA brand products are extensively tested before shipping, to ensure that all applicable safety standards are met, in order to protect the customer and customer engineer (hereafter called the CE) from the risk of injury. However, in daily use, any electrical equipment may be subject to parts wear and eventual failure. In order to maintain safety and reliability, the CE must perform regular safety checks.

1. Power Supply

Connection to Power Supply

⚠ WARNING

- Check that mains voltage is as specified.

  Connection to wrong voltage supply may result in fire or electric shock.

- Connect power plug directly into wall outlet having same configuration as the plug.

  Use of an adapter leads to the product connecting to inadequate power supply (voltage, current capacity, grounding), and may result in fire or electric shock.

  If proper wall outlet is not available, advice the customer to contact qualified electrician for the installation.

- Plug the power cord into the dedicated wall outlet with a capacity greater than the maximum power consumption.

  If excessive current flows in the wall outlet, fire may result.

- If two or more power cords can be plugged into the wall outlet, the total load must not exceed the rating of the wall outlet.

  If excessive current flows in the wall outlet, fire may result.

- Make sure the power cord is plugged in the wall outlet securely.

  Contact problems may lead to increased resistance, overheating, and the risk of fire.

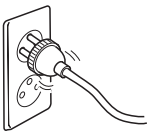

- Check whether the product is grounded properly.

  If current leakage occurs in an ungrounded product, you may suffer electric shock while operating the product.

  Connect power plug to grounded wall outlet.

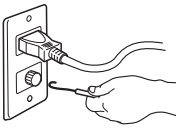

Power Plug and Cord

⚠ WARNING

- When using the power cord set (inlet type) that came with this product, make sure the connector is securely inserted in the inlet of the product.
  When securing measure is provided, secure the cord with the fixture properly.
  If the power cord (inlet type) is not connected to the product securely, a contact problem may lead to increased resistance, overheating, and risk of fire.

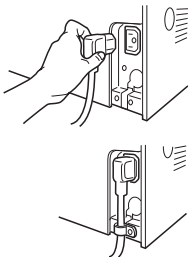

- Check whether the power cord is not stepped on or pinched by a table and so on.
  Overheating may occur there, leading to a risk of fire.

- Check whether the power cord is damaged. Check whether the sheath is damaged.
  If the power plug, cord, or sheath is damaged, replace with a new power cord (with plug and connector on each end) specified by KMBT. Using the damaged power cord may result in fire or electric shock.

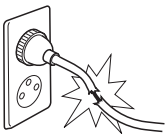

- Do not bundle or tie the power cord.
  Overheating may occur there, leading to a risk of fire.

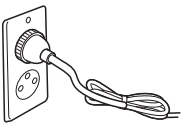

- Check whether dust is collected around the power plug and wall outlet.
  Using the power plug and wall outlet without removing dust may result in fire.

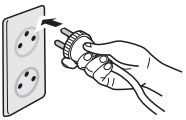

- Do not insert the power plug into the wall outlet with a wet hand.
  The risk of electric shock exists.

- When unplugging the power cord, grasp the plug, not the cable.
  The cable may be broken, leading to a risk of fire and electric shock.

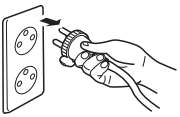

Wiring

⚠ WARNING

- Never use multi-plug adapters to plug multiple power cords in the same outlet.

  If used, the risk of fire exists.

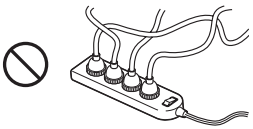

- When an extension cord is required, use a specified one. Current that can flow in the extension cord is limited, so using a too long extension cord may result in fire.

  Do not use an extension cable reel with the cable taken up. Fire may result.

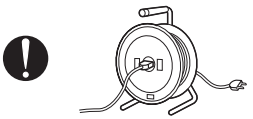

2. Installation Requirements

Prohibited Installation Places

⚠ WARNING

- Do not place the product near flammable materials or volatile materials that may catch fire.

  A risk of fire exists.

- Do not place the product in a place exposed to water such as rain.

  A risk of fire and electric shock exists.

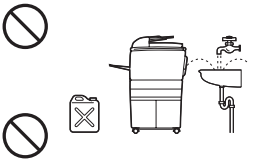

When not Using the Product for a long time

⚠ WARNING

- When the product is not used over an extended period of time (holidays, etc.), switch it off and unplug the power cord.

  Dust collected around the power plug and outlet may cause fire.

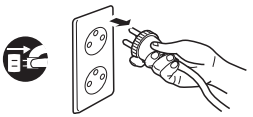

Ventilation

⚠ CAUTION

- The product generates ozone gas during operation, but it will not be harmful to the human body.

  If a bad smell of ozone is present in the following cases, ventilate the room.

  a. When the product is used in a poorly ventilated room
  b. When taking a lot of copies
  c. When using multiple products at the same time

Stability

⚠ CAUTION

- Be sure to lock the caster stoppers.

  In the case of an earthquake and so on, the product may slide, leading to a injury.

Inspection before Servicing

⚠ CAUTION

- Before conducting an inspection, read all relevant documentation (service manual, technical notices, etc.) and proceed with the inspection following the prescribed procedure in safety clothes, using only the prescribed tools. Do not make any adjustment not described in the documentation.

  If the prescribed procedure or tool is not used, the product may break and a risk of injury or fire exists.

- Before conducting an inspection, be sure to disconnect the power plugs from the product and options.

  When the power plug is inserted in the wall outlet, some units are still powered even if the POWER switch is turned OFF. A risk of electric shock exists.

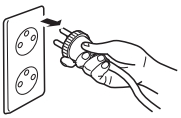

- The area around the fixing unit is hot.

  You may get burnt.

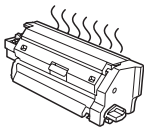

Work Performed with the Product Powered On

⚠ WARNING

- Take every care when making adjustments or performing an operation check with the product powered.

  If you make adjustments or perform an operation check with the external cover detached, you may touch live or high-voltage parts or you may be caught in moving gears or the timing belt, leading to a risk of injury.

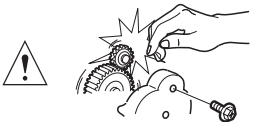

- Take every care when servicing with the external cover detached.

  High-voltage exists around the drum unit. A risk of electric shock exists.

Safety Checkpoints

⚠ WARNING

- Check the exterior and frame for edges, burrs, and other damage.

  The user or CE may be injured.

- Do not allow any metal parts such as clips, staples, and screws to fall into the product.

  They can short internal circuits and cause electric shock or fire.

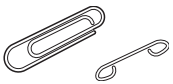

- Check wiring for squeezing and any other damage.

  Current can leak, leading to a risk of electric shock or fire.

- Carefully remove all toner remnants and dust from electrical parts and electrode units such as a charging corona unit.

  Current can leak, leading to a risk of product trouble or fire.

- Check high-voltage cables and sheaths for any damage.

  Current can leak, leading to a risk of electric shock or fire.

Safety Checkpoints

⚠ WARNING

- Check electrode units such as a charging corona unit for deterioration and sign of leakage.

  Current can leak, leading to a risk of trouble or fire.

- Before disassembling or adjusting the write unit (P/H unit) incorporating a laser, make sure that the power cord has been disconnected.

  The laser light can enter your eye, leading to a risk of loss of eyesight.

- Do not remove the cover of the write unit. Do not supply power with the write unit shifted from the specified mounting position.

  The laser light can enter your eye, leading to a risk of loss of eyesight.

- When replacing a lithium battery, replace it with a new lithium battery specified in the Parts Guide Manual. Dispose of the used lithium battery using the method specified by local authority.

  Improper replacement can cause explosion.

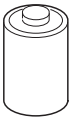

- After replacing a part to which AC voltage is applied (e.g., optical lamp and fixing lamp), be sure to check the installation state.

  A risk of fire exists.

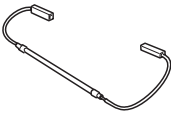

- Check the interlock switch and actuator for loosening and check whether the interlock functions properly.

  If the interlock does not function, you may receive an electric shock or be injured when you insert your hand in the product (e.g., for clearing paper jam).

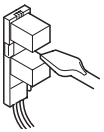

- Make sure the wiring cannot come into contact with sharp edges, burrs, or other pointed parts.

  Current can leak, leading to a risk of electric shock or fire.

Safety Checkpoints

⚠ WARNING

- Make sure that all screws, components, wiring, connectors, etc. that were removed for safety check and maintenance have been reinstalled in the original location. (Pay special attention to forgotten connectors, pinched cables, forgotten screws, etc.)

  A risk of product trouble, electric shock, and fire exists.

Handling of Consumables

⚠ WARNING

- Toner and developer are not harmful substances, but care must be taken not to breathe excessive amounts or let the substances come into contact with eyes, etc. It may be stimulative.

  If the substances get in the eye, rinse with plenty of water immediately. When symptoms are noticeable, consult a physician.

- Never throw the used cartridge and toner into fire.

  You may be burned due to dust explosion.

Handling of Service Materials

⚠ CAUTION

- Unplug the power cord from the wall outlet.

  Drum cleaner (isopropyl alcohol) and roller cleaner (acetone-based) are highly flammable and must be handled with care. A risk of fire exists.

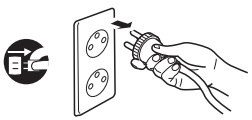

- Do not replace the cover or turn the product ON before any solvent remnants on the cleaned parts have fully evaporated.

  A risk of fire exists.

Handling of Service Materials

⚠ CAUTION

- Use only a small amount of cleaner at a time and take care not to spill any liquid. If this happens, immediately wipe it off.
  A risk of fire exists.

- When using any solvent, ventilate the room well.
  Breathing large quantities of organic solvents can lead to discomfort.

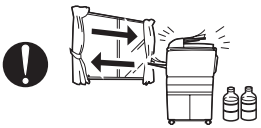

[4] Used Batteries Precautions

ALL Areas

CAUTION

Danger of explosion if battery is incorrectly replaced.
Replace only with the same or equivalent type recommended by the manufacturer.
Dispose of used batteries according to the manufacturer's instructions.

Germany

VORSICHT!

Explosionsgefahr bei unsachgemäßem Austausch der Batterie.
Ersatz nur durch denselben oder einen vom Hersteller empfohlenen gleichwertigen Typ.
Entsorgung gebrauchter Batterien nach Angaben des Herstellers.

France

ATTENTION

Il y a danger d'explosion s'il y a remplacement incorrect de la batterie.
Remplacer uniquement avec une batterie du même type ou d'un type équivalent recommandé par le constructeur.
Mettre au rebut les batteries usagées conformément aux instructions du fabricant.

Denmark

ADVARSEL!

Lithiumbatteri - Eksplosionsfare ved fejlagtig håndtering.
Udskiftning må kun ske med batteri af samme fabrikat og type.
Levér det brugte batteri tilbage til leverandøren.

Finland, Sweden

VAROITUS

Paristo voi räjähtää, jos se on virheellisesti asennettu.
Vaihda paristo ainoastaan laitevalmistajan suosittelemaan tyyppiin.
Hävitä käytetty paristo valmistajan ohjeiden mukaisesti.

VARNING

Explosionsfara vid felaktigt batteribyte.
Använd samma batterityp eller en ekvivalent typ som rekommenderas av apparattillverkaren.
Kassera använt batteri enligt fabrikantens instruktion.

Norway

ADVARSEL

Eksplosjonsfare ved feilaktig skifte av batteri.
Benytt samme batteritype eller en tilsvarende type anbefalt av apparatfabrikanten.
Brukte batterier kasseres i henhold til fabrikantens instruksjoner.

[5] Laser Safety

- This is a digital machine certified as a Class 1 laser product. There is no possibility of danger from a laser, provided the machine is serviced according to the instruction in this manual.

5.1 Internal Laser Radiation

semiconductor laser		
Maximum power of the laser diode		30 mW
Maximum average radiation power (*)	bizhub C652	19.2 µW
	bizhub C552	16.3 µW
	bizhub C452	16.3 µW
Wavelength		775-800 nm

*at laser aperture of the Print Head Unit

- This product employs a Class 3B laser diode that emits an invisible laser beam. The laser diode and the scanning polygon mirror are incorporated in the print head unit.
- The print head unit is NOT A FIELD SERVICEABLE ITEM. Therefore, the print head unit should not be opened under any circumstances.

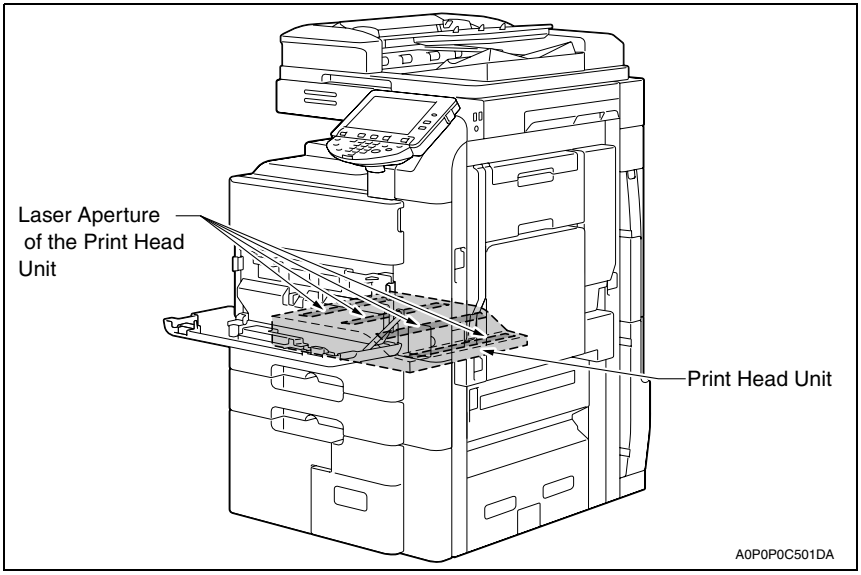

U.S.A., Canada
(CDRH Regulation)

- This machine is certified as a Class 1 Laser product under Radiation Performance Standard according to the Food, Drug and Cosmetic Act of 1990. Compliance is mandatory for Laser products marketed in the United States and is reported to the Center for Devices and Radiological Health (CDRH) of the U.S. Food and Drug Administration of the U.S. Department of Health and Human Services (DHHS). This means that the device does not produce hazardous laser radiation.

- The label shown on page S-16 indicates compliance with the CDRH regulations and must be attached to laser products marketed in the United States.

CAUTION
- **Use of controls, adjustments or performance of procedures other than those specified in this manual may result in hazardous radiation exposure.**

semiconductor laser	
Maximum power of the laser diode	30 mW
Wavelength	775-800 nm

All Areas

CAUTION
- **Use of controls, adjustments or performance of procedures other than those specified in this manual may result in hazardous radiation exposure.**

semiconductor laser	
Maximum power of the laser diode	30 mW
Wavelength	775-800 nm

Denmark

ADVARSEL
- **Usynlig laserstråling ved åbning, når sikkerhedsafbrydere er ude af funktion. Undgå udsættelse for stråling. Klasse 1 laser produkt der opfylder IEC60825-1 sikkerheds kravene.**

halvlederlaser	
Laserdiodens højeste styrke	30 mW
bølgelængden	775-800 nm

Finland, Sweden

LUOKAN 1 LASERLAITE
KLASS 1 LASER APPARAT

VAROITUS!
- **Laitteen käyttäminen muulla kuin tässä käyttöohjeessa mainitulla tavalla saattaa altistaa käyttäjän turvallisuusluokan 1 ylittävälle näkymättömälle lasersäteilylle.**

puolijohdelaser	
Laserdiodin suurin teho	30 mW
aallonpituus	775-800 nm

VARNING!
- **Om apparaten används på annat sätt än i denna bruksanvisning specificerats, kan användaren utsättas för osynlig laserstrålning, som överskrider gränsen för laserklass 1.**

halvledarlaser	
Den maximala effekten för laserdioden	30 mW
våglängden	775-800 nm

VARO!
- **Avattaessa ja suojalukitus ohitettaessa olet alttiina näkymättomälle lasersäteilylle. Älä katso säteeseen.**

VARNING!
- **Osynlig laserstråining när denna del är öppnad och spärren är urkopplad. Betrakta ej stråien.**

Norway

ADVERSEL
- **Dersom apparatet brukes på annen måte enn spesifisert i denne bruksanvisning, kan brukeren utsettes för unsynlig laserstrålning, som overskrider grensen for laser klass 1.**

halvleder laser	
Maksimal effekt till laserdiode	30 mW
bølgelengde	775-800 nm

5.2 Laser Safety Label

- A laser safety label is attached to the inside of the machine as shown below.

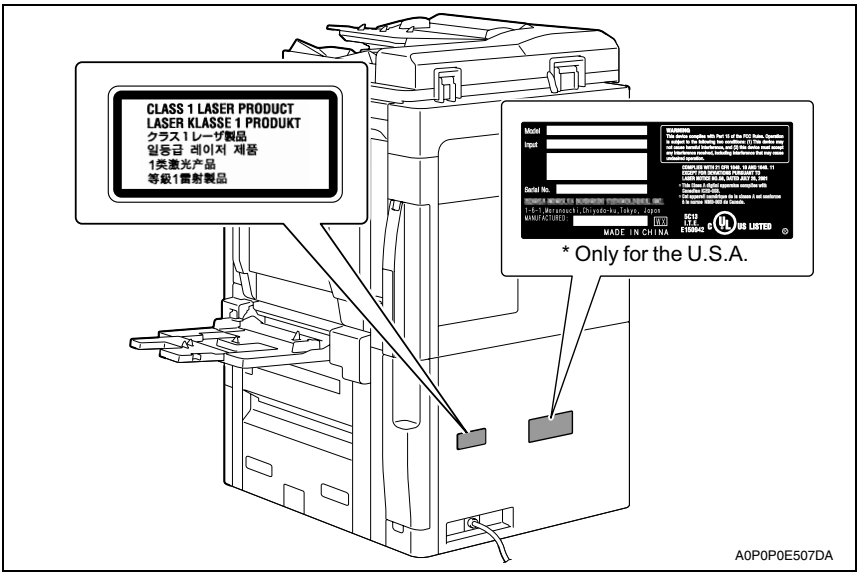

5.3 Laser Caution Label

- A laser caution label is attached to the outside of the machine as shown below.

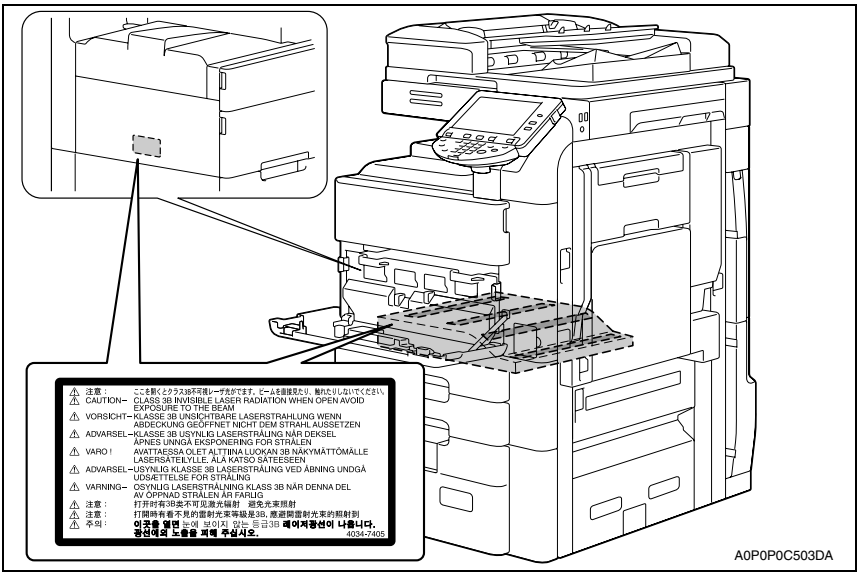

5.4 PRECAUTIONS FOR HANDLING THE LASER EQUIPMENT

- When laser protective goggles are to be used, select ones with a lens conforming to the above specifications.
- When a disassembly job needs to be performed in the laser beam path, such as when working around the printerhead and PC drum, be sure first to turn the printer OFF.
- If the job requires that the printer be left ON, take off your watch and ring and wear laser protective goggles.
- A highly reflective tool can be dangerous if it is brought into the laser beam path. Use utmost care when handling tools on the user's premises.
- The Print head is not to be disassembled or adjusted in the field. Replace the unit or Assembly including the control board. Therefore, remove the laser diode, and do not perform control board trimmer adjustment.

WARNING INDICATIONS ON THE MACHINE

Caution labels shown are attached in some areas on/in the machine.
When accessing these areas for maintenance, repair, or adjustment, special care should be taken to avoid burns and electric shock.

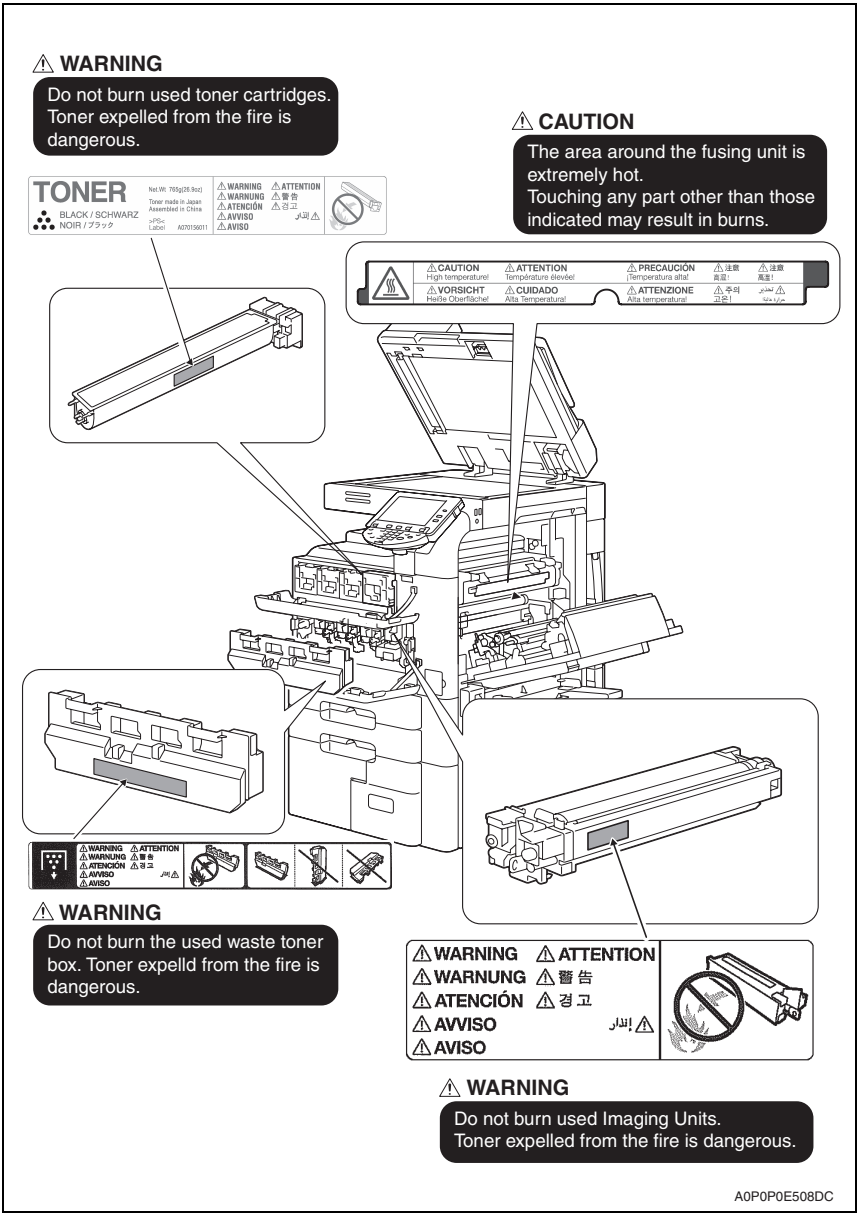

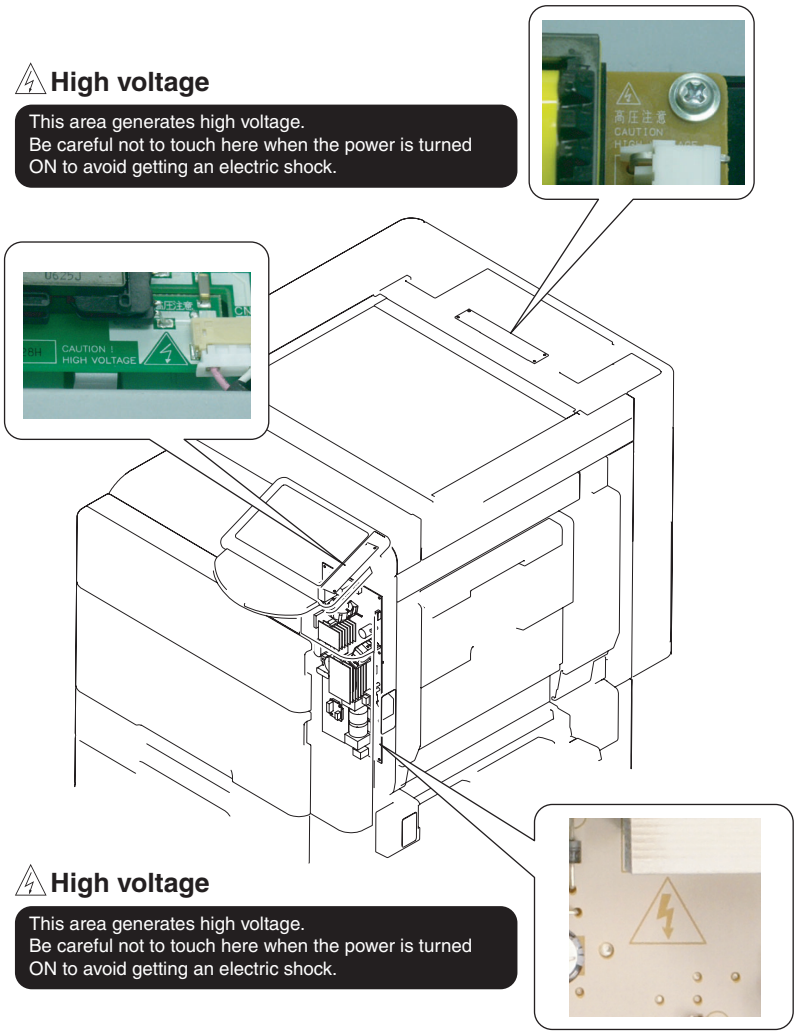

A0P0P0E509DA

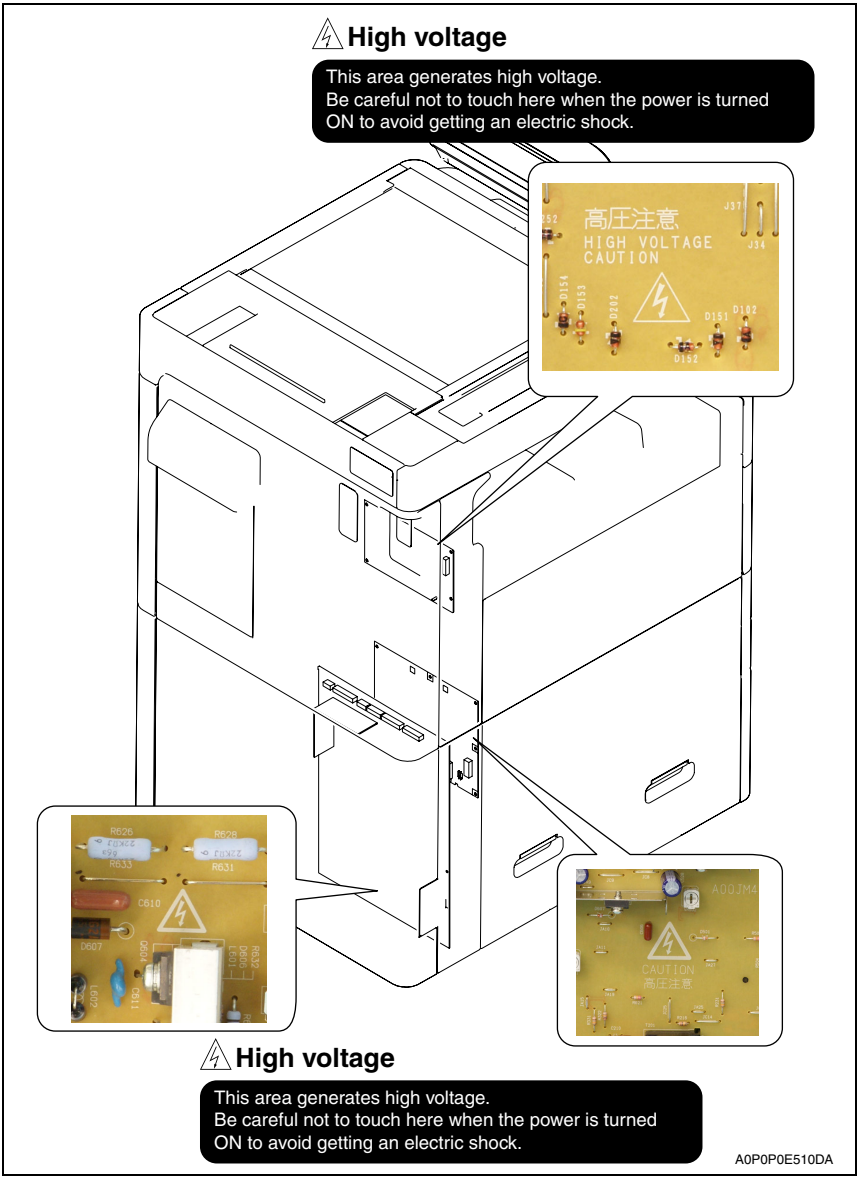

CAUTION:

- **You may be burned or injured if you touch any area that you are advised not to touch by any caution label. Do not remove caution labels. If any caution label has come off or soiled and therefore the caution cannot be read, contact our service office.**

MEASURES TO TAKE IN CASE OF AN ACCIDENT

1. If an accident has occurred, the distributor who has been notified first must immediately take emergency measures to provide relief to affected persons and to prevent further damage.
2. If a report of a serious accident has been received from a customer, an on-site evaluation must be carried out quickly and KMBT must be notified.
3. To determine the cause of the accident, conditions and materials must be recorded through direct on-site checks, in accordance with instructions issued by KMBT.
4. For reports and measures concerning serious accidents, follow the regulations specified by every distributor.

Blank Page

Composition of the service manual

This service manual consists of Theory of Operation section and Field Service section to explain the main machine and its corresponding options.

Theory of Operation section gives, as information for the CE to get a full understanding of the product, a rough outline of the object and role of each function, the relationship between the electrical system and the mechanical system, and the timing of operation of each part.

Field Service section gives, as information required by the CE at the site (or at the customer's premise), a rough outline of the service schedule and its details, maintenance steps, the object and role of each adjustment, error codes and supplementary information.

The basic configuration of each section is as follows. However some options may not be applied to the following configuration.

<Theory of Operation section>

OUTLINE:	Explanation of system configuration, product specifications, unit configuration, and paper path
CONFIGURATION/ OPERATION:	Explanation of configuration of each unit, operating system, and control system

<Field Service section>

OUTLINE:	Explanation of system configuration, and product specifications
MAINTENANCE:	Explanation of service schedule, maintenance steps, service tools, removal/reinstallation methods of major parts, and firmware version up method etc.
ADJUSTMENT/SETTING:	Explanation of utility mode, service mode, and mechanical adjustment etc.
TROUBLESHOOTING:	Explanation of lists of jam codes and error codes, and their countermeasures etc.
APPENDIX:	Parts layout drawings, connector layout drawings, timing chart, overall layout drawing are attached.

Notation of the service manual

A. Product name

In this manual, each of the products is described as follows:

(1)	bizhub C652/C552/C452:	Main body
(2)	Microsoft Windows 98:	Windows 98
	Microsoft Windows Me:	Windows Me
	Microsoft Windows NT 4.0:	Windows NT 4.0 or Windows NT
	Microsoft Windows 2000:	Windows 2000
	Microsoft Windows XP:	Windows XP
	Microsoft Windows Vista:	Windows Vista
	When the description is made in combination of the OS's mentioned above:	
		Windows 98/Me
		Windows NT 4.0/2000
		Windows NT/2000/XP/Vista
		Windows 98/Me/ NT/2000/XP/Vista

B. Brand name

The company names and product names mentioned in this manual are the brand name or the registered trademark of each company.

C. Feeding direction

- When the long side of the paper is parallel with the feeding direction, it is called short edge feeding. The feeding direction which is perpendicular to the short edge feeding is called the long edge feeding.
- Short edge feeding will be identified with [S (abbreviation for Short edge feeding)] on the paper size. No specific notation is added for the long edge feeding.
  When the size has only the short edge feeding with no long edge feeding, [S] will not be added to the paper size.

<Sample notation>

Paper size	Feeding direction	Notation
A4	Long edge feeding	A4
	Short edge feeding	A4S
A3	Short edge feeding	A3

KONICA MINOLTA

SERVICE MANUAL

FIELD SERVICE

bizhub

C652/C552/C452

2009.02

KONICA MINOLTA BUSINESS TECHNOLOGIES, INC. Ver. 2.0

Revision history

After publication of this service manual, the parts and mechanism may be subject to change for improvement of their performance.
Therefore, the descriptions given in this service manual may not coincide with the actual machine.

When any change has been made to the descriptions in the service manual, a revised version will be issued with a revision mark added as required.

Revision mark:

- To indicate clearly a specific section revised within text, ⚠1 is shown at the left margin of the corresponding revised section.
  The number inside ⚠1 represents the number of times the revision has been made.

- To indicate clearly a specific page that contains a revision or revisions, the page number appearing at the left or right bottom of the specific page is marked with ❶ .
  The number inside ❶ represents the number of times the revision has been made.

NOTE

Revision marks shown in a page are restricted only to the latest ones with the old ones deleted.

- When a page revised in Ver. 2.0 has been changed in Ver. 3.0:
  The revision marks for Ver. 3.0 only are shown with those for Ver. 2.0 deleted.
- When a page revised in Ver. 2.0 has not been changed in Ver. 3.0:
  The revision marks for Ver. 2.0 are left as they are.

Date	Service manual Ver.	Revision mark	Descriptions of revision
2009/07	2.0	⚠1	Description addition of bizhub C452 and the function version 2 (card ver. 47) firmaware/ Error corrections
2009/01	1.0	—	Issue of the first edition

CONTENTS

bizhub C652/C552/C452 Main body

OUTLINE

1. SYSTEM CONFIGURATION 1
1.1 bizhub C652/C552 1
1.2 bizhub C452 3
2. PRODUCT SPECIFICATIONS 5
2.1 Type 5
2.2 Functions 6
2.3 Paper 8
2.4 Materials 9
2.5 Print volume 10
2.6 Machine specifications 11
2.7 Operating environment 12
2.8 Print functions 13
2.9 Scan functions 15

MAINTENANCE

3. PERIODICAL MIANTENANCE ITEMS 17
3.1 Concept of periodical maintenance 17
3.1.1 Main body 17
3.1.2 Automatic document feeder (ADF) 18
3.1.3 LU-204/301 19
3.1.4 ZU-606 19
3.1.5 FS-526 20
3.1.6 SD-508 20
3.1.7 PK-516 21
3.1.8 JS-602 21
3.1.9 PI-505 21
3.1.10 FS-527 22
3.2 Periodical replacement parts list 23
3.2.1 Main body 23
3.2.2 Option 24
3.3 Periodical cleaning parts list 25
3.3.1 Main body 25
3.3.2 Option 26

3.4 CMS corresponding parts ... 27
3.4.1 CMS corresponding parts ... 27
3.4.2 CMS corresponding parts list ... 27
3.4.3 Replacing CMS corresponding parts as a set ... 27
3.5 Concept of parts life ... 28
3.5.1 Life value of consumables and parts ... 28
3.5.2 Conditions for life specifications values ... 29
3.5.3 Control causing inhibited printing for one part when an inhibited-printing event occurs in another part ... 30
4. PERIODICAL MAINTENANCE PROCEDURE ... 31
4.1 Housing section ... 31
4.1.1 Replacing the ozone filter ... 31
4.1.2 Replacing the toner filter ... 31
4.2 Write section ... 32
4.2.1 Cleaning of the PH window Y/M/C/K ... 32
4.3 Imaging unit section ... 33
4.3.1 Replacing the imaging unit/Y,M,C ... 33
4.3.2 Replacing the drum unit/K ... 36
4.4 Charging section ... 40
4.4.1 Cleaning of the electrostatic charger wire/Y,M,C ... 40
4.5 Developing section ... 40
4.5.1 Replacing the developing unit/K ... 40
4.6 Toner supply section ... 44
4.6.1 Replacing the toner cartridge ... 44
4.7 1st transfer section ... 46
4.7.1 Replacing the transfer belt unit ... 46
4.8 2nd transfer/separation section ... 50
4.8.1 Replacing the transfer roller unit ... 50
4.9 Toner collection section ... 51
4.9.1 Cleaning of the area around the waste toner collecting port ... 51
4.9.2 Replacing the waste toner box ... 51
4.10 Paper feed section ... 53
4.10.1 Replacing the tray 1 feed roller/tray 1 pick-up roller ... 53
4.10.2 Replacing the tray 1 separation roller assy ... 56
4.10.3 Replacing the tray 2 feed roller/tray 2 pick-up roller ... 57
4.10.4 Replacing the tray 2 separation roller assy ... 60
4.10.5 Replacing the tray 3 feed roller/tray 3 pick-up roller ... 61
4.10.6 Replacing the tray 3 separation roller ... 62
4.10.7 Replacing the tray 4 feed roller/tray 4 pick-up roller ... 64

4.10.8 Replacing the tray 4 separation roller 65
4.10.9 Replacing the manual bypass tray feed roller/manual bypass tray pick-up roller 67
4.10.10 Replacing the manual bypass tray separation roller assy 69
4.11 Vertical conveyance section 70
4.11.1 Cleaning of the paper dust remover 70
4.12 Registration section 71
4.12.1 Cleaning of the timing roller 71
4.13 Fusing section 71
4.13.1 Replacing the fusing unit 71
4.13.2 Cleaning of the IH coil unit 73
4.14 Duplex section 73
4.14.1 Cleaning of the duplex transport rollers 73
5. OTHER MAINTENANCE ITEMS 74
5.1 Disassembly/adjustment prohibited items 74
5.1.1 CCD unit 74
5.1.2 PH unit 74
5.1.3 Fusing unit 74
5.2 Disassembly/reassembly parts list 75
5.3 Cleaning parts list 78
5.4 Need lubrication parts list 78
5.5 Disassembly/reassembly procedure 79
5.5.1 Upper front door 79
5.5.2 Lower front door 80
5.5.3 Upper front cover /1 80
5.5.4 Upper front cover /2 81
5.5.5 Right front cover 81
5.5.6 Lower front cover 82
5.5.7 Upper left cover 83
5.5.8 Lower left cover 83
5.5.9 Rear left cover 84
5.5.10 Paper exit rear cover 84
5.5.11 Scanner rear cover 85
5.5.12 Scanner right cover 85
5.5.13 Scanner upper rear cover/1 86
5.5.14 Scanner upper rear cover/2 86
5.5.15 Scanner left cover 87
5.5.16 Scanner upper front cover 87

5.5.17 Scanner front cover ... 88
5.5.18 USB interface cover ... 88
5.5.19 Original glass ... 89
5.5.20 Interface cover/1 ... 90
5.5.21 Interface cover/2 ... 90
5.5.22 Rear right cover/1 ... 91
5.5.23 Rear right cover/2 ... 91
5.5.24 Manual bypass tray rear cover ... 92
5.5.25 Upper rear cover/1 ... 92
5.5.26 Upper rear cover/2 ... 92
5.5.27 Lower rear cover ... 93
5.5.28 Front right cover ... 93
5.5.29 Control panel assy ... 93
5.5.30 Exit tray (option: OT-503) ... 94
5.5.31 Tray 1/2 ... 96
5.5.32 Tray 3/4 ... 96
5.5.33 PH unit ... 97
5.5.34 Duplex unit ... 99
5.5.35 Manual bypass tray unit ... 100
5.5.36 CCD unit ... 101
5.5.37 Original glass moving unit ... 103
5.5.38 Glass step sheet ... 105
5.5.39 Exposure unit ... 107
5.5.40 Hard disk ... 109
5.5.41 IH coil (FH1) ... 111
5.5.42 Intermediate transport roller assy ... 115
5.5.43 Main drive unit ... 116
5.5.44 LCC drive unit ... 118
5.5.45 Scanner chassis ... 123
5.5.46 Scanner relay board (REYB/SCAN) ... 125
5.5.47 Original glass position control board (OGPCB) ... 126
5.5.48 Inverter board (INVB) ... 127
5.5.49 PH relay board (REYB/PH) ... 128
5.5.50 Paper feed/transport drive board (PFTDB) ... 129
5.5.51 DC power supply (DCPU) ... 130
5.5.52 Relay drive board (REDB) ... 133
5.5.53 Printer control board (PRCB) ... 134

5.5.54 How to open PWB box/1 135
5.5.55 PCI board (PCIB) 136
5.5.56 MFP board (MFPB) 137
5.5.57 How to open PWB box/2 140
5.5.58 High voltage unit/2 (HV2) 140
5.5.59 Service EEPROM board (SV ERB) 141
5.5.60 High voltage unit/1 (HV1) 144
5.5.61 IH power supply (IHPU) 149
5.5.62 Paper size detect board/1 (PSDTB/1) 151
5.5.63 Paper size detect board/2 (PSDTB/2) 152
5.5.64 ADU transport motor/1 (M31) 153
5.5.65 ADU transport motor/2 (M32) 154
5.5.66 Bypass tray up down motor (M28) / bypass paper feed motor (M27) 155
5.5.67 Scanner motor (M201) 159
5.5.68 Original glass moving motor (M202) 161
5.5.69 Waste toner agitating motor (M20) 163
5.5.70 Transport motor (M25) 164
5.5.71 Vertical transport motor (M26) 165
5.5.72 Transfer belt motor (M1) 166
5.5.73 Color PC drum motor (M16) 166
5.5.74 Color developing motor (M17) 167
5.5.75 2nd image transfer pressure retraction motor (M3) 167
5.5.76 Registration motor (M2) 168
5.5.77 Fusing pressure retraction motor (M29) 170
5.5.78 Fusing motor (M30) 171
5.5.79 Switchback motor (M33) 171
5.5.80 Exit motor (M4) 174
5.5.81 K PC drum motor (M18) 175
5.5.82 K developing motor (M19) 176
5.5.83 Tray1 lift-up motor (M6) 176
5.5.84 Tray2 lift-up motor (M8) 177
5.5.85 Tray3 lift-up motor (M23) 178
5.5.86 Tray4 lift-up motor (M24) 178
5.5.87 Tray1 vertical transport motor (M5) 179
5.5.88 Tray2 vertical transport motor (M7) 180
5.5.89 Take-up motor (M22) 181
5.5.90 Charge cleaning motor/K (M15) 182

5.5.91 Cleaner motor (M38) ... 184
5.5.92 1st image transfer pressure retraction motor (M21) ... 188
5.5.93 Toner cartridge motor C/K (M14) ... 188
5.5.94 Toner cartridge motor Y/M (M13) ... 189
5.5.95 Toner supply motor/Y (M9), toner supply motor/M (M10), toner supply motor/C (M11), toner supply motor/K (M12) ... 190
5.5.96 Tray 1 paper feed clutch (CL1) ... 193
5.5.97 Tray 2 paper feed clutch 2 (CL2) ... 194
5.5.98 Horizontal transport clutch (CL3) ... 195
5.5.99 Tray 3 paper feed clutch (CL5)/Tray 3 transport clutch (CL6) ... 195
5.5.100 Tray 4 paper feed clutch (CL7) ... 196
5.5.101 IDC registration sensor/F (IDCS/F), IDC registration sensor/R (IDCS/R) ... 197
5.5.102 Scanner drive cables ... 199
5.5.103 Tray 3/4 lift wire ... 209
5.6 Cleaning procedure ... 215
5.6.1 Transfer belt unit ... 215
5.6.2 Tray 1 feed roller/tray 1 pick-up roller ... 215
5.6.3 Tray 1 separation roller ... 216
5.6.4 Tray 1 transport roller ... 216
5.6.5 Tray 2 feed roller/tray 2 pick-up roller ... 217
5.6.6 Tray 2 separation roller ... 217
5.6.7 Tray 2 transport roller ... 218
5.6.8 Tray 3 feed roller/tray 3 pick-up roller ... 218
5.6.9 Tray 3 separation roller ... 219
5.6.10 Tray 3 transport roller ... 219
5.6.11 Tray 4 feed roller/tray 4 pick-up roller ... 220
5.6.12 Tray 4 separation roller ... 221
5.6.13 Tray 4 transport roller ... 221
5.6.14 Manual bypass tray feed roller ... 221
5.6.15 Manual bypass tray pick-up roller ... 222
5.6.16 Manual bypass tray separation roller ... 222
5.6.17 Intermediate transport roller ... 222
5.6.18 Original glass ... 223
5.6.19 Scanner rails ... 224
5.6.20 Mirrors (1st/2nd/3rd) ... 224
5.6.21 Lens ... 224
5.6.22 CCD sensor ... 225
5.7 Lubrication procedure ... 227

5.7.1 Fusing unit 227
6. SERVICE TOOL 229
6.1 Service material list 229
6.2 CE tool list 229
7. FIRMWARE REWRITING 231
7.1 Outline 231
7.2 USB memory 231
7.2.1 Preparation 231
7.2.2 Procedure 231
7.2.3 Action when data transfer fails 235
7.3 Updating the firmware with the Internet ISW 236
7.3.1 Outline 236
7.3.2 Service environment 236
7.3.3 Preparations for firmware rewriting 236
7.3.4 Firmware rewriting from the control panel 239
7.3.5 Firmware rewriting from the CS Remote Care 241
7.3.6 Error code list for the Internet ISW 242
8. COMMERCIALLY AVAILABLE PARTS 245
8.1 Installing the key counter 245
8.1.1 Configuration 245
8.1.2 Procedure 245
8.2 Installing the original size detection 2 sensor (PS205) 251
8.2.1 Procedure 251

ADJUSTMENT/SETTING

9. HOW TO USE THE ADJUSTMENT/SETTING SECTION253
10. UTILITY 254
10.1 List of utility mode 254
10.2 Starting/Exiting 268
10.2.1 Starting procedure 268
10.2.2 Exiting procedure 268
10.3 Touch Panel Adjustment 269
10.4 One-Touch User Box Registration 270
10.4.1 Create One-Touch destination-Address Book (Public)/(Personal) 270
10.4.2 Create One-Touch destination-Group 271
10.4.3 Create One-Touch destination-E-mail Settings 272
10.4.4 Create User Box 272
10.4.5 Create User Box-Public/Personal User Box 272

10.4.6 Create User Box-Bulletin Board User Box 273
10.4.7 Create User Box-Relay User Box 273
10.4.8 Limiting Access to Destinations 274
10.4.9 Limiting Access to Destinations-Apply Levels/Groups to Destinations 274
10.5 User Settings 275
10.5.1 System Settings-Language Selection 275
10.5.2 System Settings-Measurement Unit Settings 275
10.5.3 System Settings-Paper Tray Settings 275
10.5.4 System Settings-Auto Color Level Adjust. 276
10.5.5 System Settings-Power Save Settings 277
10.5.6 System Settings-Output Settings 277
10.5.7 System Settings-AE Level Adjustment 278
10.5.8 System Settings-Auto Paper Select for Small Original 278
10.5.9 System Settings-Blank Page Print Settings 279
10.5.10 System Settings-Page Number Print Position 279
10.5.11 System Settings-Select Keyboard 279
10.5.12 Custom Display Settings-Copier Settings 280
10.5.13 Custom Display Settings-Scan/Fax Settings 281
10.5.14 Custom Display Settings-User Box Settings 282
10.5.15 Custom Display Settings-Copy Screen 283
10.5.16 Custom Display Settings-Fax Active Screen 283
10.5.17 Custom Display Settings-Color Selection Settings 283
10.5.18 Custom Display Settings-Left Panel Display Default 284
10.5.19 Custom Display Settings-Search Option Settings 284
10.5.20 Copier Settings-Auto Booklet ON when Fold & Staple 284
10.5.21 Copier Settings-Auto Zoom for Combine/Booklet 284
10.5.22 Copier Settings-Auto Sort/Group Selection 285
10.5.23 Copier Settings-Default Copy Settings 285
10.5.24 Copier Settings-Default Enlarge Display Settings 286
10.5.25 Copier Settings-When AMS Direction is Incorrect 286
10.5.26 Copier Settings-Separate Scan Output Method 286
10.5.27 Copier Settings-Enlargement Rotation 287
10.5.28 Copier Settings-Auto Zoom (Platen) 287
10.5.29 Copier Settings-Auto Zoom (ADF) 287
10.5.30 Copier Settings-Specify Default Tray when APS Off 287
10.5.31 Copier Settings-Select Tray for Insert Sheet 288
10.5.32 Copier Settings-Tri-Fold Print Side 288

10.5.33 Copier Settings-Print Jobs During Copy Operation 288
10.5.34 Copier Settings-Automatic Image Rotation 288
10.5.35 Copier Settings-Finishing Program 289
10.5.36 Copier Settings-Card Shot Settings 289
10.5.37 Scan/Fax Settings-JPEG Compression Level 290
10.5.38 Scan/Fax Settings-Black Compression Level 290
10.5.39 Scan/Fax Settings-TWAIN Lock Time 290
10.5.40 Scan/Fax Settings-Default Scan/Fax Settings 291
10.5.41 Scan/Fax Settings-Default Enlarge Display Settings 291
10.5.42 Scan/Fax Settings-Compact PDF/XPS Compression Level 292
10.5.43 Scan/Fax Settings-Color TIFF Type 292
10.5.44 Scan/Fax Settings-OCR Operation Setting 292
10.5.45 Scan/Fax Settings-Graphic Outlining 292
10.5.46 Printer Settings-Basic Settings 293
10.5.47 Printer Settings-Paper Setting 295
10.5.48 Printer Settings-PCL Settings 297
10.5.49 Printer Settings-PS Setting 298
10.5.50 Printer Settings-XPS Settings 299
10.5.51 Printer Settings-Print Reports 300
10.5.52 Printer Settings-TIFF Image Paper Setting 300
10.5.53 Change Password 301
10.5.54 Change E-mail Address 301
10.5.55 Change Icon 301
10.5.56 Register Authentication Settings 302
10.5.57 Registered Application Setting-Default Application Selection 302
10.5.58 Cellular Phone/PDA Setting-Link File Error Notification 302
10.5.59 Cellular Phone/PDA Setting-Proxy Server Use 302
10.5.60 Cellular Phone/PDA Setting-Print Settings 303
10.6 Administrator Settings 304
10.6.1 System Settings-Power Save Settings 304
10.6.2 System Settings-Output Settings 305
10.6.3 System Settings-Date/Time Settings 306
10.6.4 System Settings-Daylight Saving Time 306
10.6.5 System Settings-Weekly Timer Settings 307
10.6.6 System Settings-Restrict User Access 308
10.6.7 System Settings-Expert Adjustment 310
10.6.8 System Settings-List/Counter 345

10.6.9 System Settings-Reset Settings 346
10.6.10 System Settings-User Box Settings 348
10.6.11 System Settings-Standard Size Setting 350
10.6.12 System Settings-Stamp Settings 351
10.6.13 System Settings-Blank Page Print Settings 351
10.6.14 System Settings-Application Key Settings 351
10.6.15 System Settings-Skip Job Operation Settings 352
10.6.16 System Settings-Default Bypass Paper Type Setting 352
10.6.17 System Settings-Page Number Print Position 352
10.6.18 System Settings-Advanced Preview Setting 352
10.6.19 Administrator/Machine Settings-Administrator Registration 352
10.6.20 Administrator/Machine Settings-Input Machine Address 353
10.6.21 One-Touch/User Box Registration-Create One-Touch Destination 353
10.6.22 One-Touch/User Box Registration-Create User Box 355
10.6.23 One-Touch/User Box Registration-One-Touch/User Box Registration List 356
10.6.24 One-Touch/User Box Registration-Maximum Number of User Boxes 357
10.6.25 User Authentication/Account Track-General Settings 357
10.6.26 User Authentication/Account Track-User Authentication Setting 360
10.6.27 User Authentication/Account Track-Account Track Setting 362
10.6.28 User Authentication/Account Track-Print without Authentication 362
10.6.29 User Authentication/Account Track-Print Counter List 363
10.6.30 User Authentication/Account Track-External Server Settings 363
10.6.31 User Authentication/Account Track-Limiting Access to Destinations 363
10.6.32 User Authentication/Account Track-Authentication Device Settings 364
10.6.33 User Authentication/Account Track-Auth/Acct Track Common Setting 365
10.6.34 User Authentication/Account Track-Scan to Home Settings 365
10.6.35 User Authentication/Account Track-Scan to Authorized Folder Settings .. 366
10.6.36 Network Settings-TCP/IP Settings 366
10.6.37 Network Setting-NetWare Settings 372
10.6.38 Network Setting-http Server Settings 375
10.6.39 Network Setting-FTP Settings 377
10.6.40 Network Setting-SMB Setting 378
10.6.41 Network Setting-LDAP Settings 380
10.6.42 Network Setting-E-mail Settings 385
10.6.43 Network Setting-SNMP Setting 392
10.6.44 Network Setting-AppleTalk Settings 396
10.6.45 Network Setting-Bonjour Setting 396

10.6.46 Network Setting-TCP Socket Settings 397
10.6.47 Network Setting-Network Fax Setting 398
10.6.48 Network Setting-WebDAV Settings 399
10.6.49 Network Setting-Web Service Settings 401
10.6.50 Network Setting-SSDP Settings 404
10.6.51 Network Setting-Detail Settings 404
10.6.52 Network Settings-IEEE802.1X Authentication Settings 409
10.6.53 Network Settings-Web Browser Setting 409
10.6.54 Network Settings-Bluetooth Setting 410
10.6.55 Copier Settings-Auto Zoom (Platen) 410
10.6.56 Copier Settings-Auto Zoom (ADF) 410
10.6.57 Copier Settings-Specify Default Tray when APS OFF 410
10.6.58 Copier Settings-Select Tray for Insert Sheet 410
10.6.59 Copier Settings-Print Jobs During Copy Operation 411
10.6.60 Copier Settings-Tri-Fold Print Side 411
10.6.61 Copier Settings-Automatic Image Rotation 411
10.6.62 Copier Settings-Card Shot Settings 412
10.6.63 Printer Settings-USB Timeout 412
10.6.64 Printer Settings-Network Timeout 412
10.6.65 Printer Settings-Print XPS Errors 413
10.6.66 Printer Settings-PSWC Direct Print 413
10.6.67 Fax Settings 413
10.6.68 Fax Settings-Header Information 413
10.6.69 Fax Settings-Header/Footer Position 413
10.6.70 Fax Settings-Line Parameter Setting 414
10.6.71 Fax Settings-TX/RX Settings 416
10.6.72 Fax Settings-Function Settings 418
10.6.73 Fax Settings-PBX Connection Setting 421
10.6.74 Fax Settings-Report Settings 422
10.6.75 Fax Settings-Job Settings List 425
10.6.76 Fax Settings-Multi Lines Settings 426
10.6.77 Fax Settings-Network Fax Settings 427
10.6.78 System Connection-OpenAPI Settings 430
10.6.79 System Connection-Call Remote Center 432
10.6.80 System Connection-Automatic Prefix/Suffix Setting 432
10.6.81 System Connection-Printer Information 432
10.6.82 System Connection-Cellular Phone/PDA Setting 432

10.6.83 Security Settings-Administrator Password 433
10.6.84 Security Settings-User Box Admin. Setting 433
10.6.85 Security Settings-Administrator Security Levels 434
10.6.86 Security Settings-Security Details 434
10.6.87 Security Settings-Enhanced Security Mode 440
10.6.88 Security Settings-HDD Settings 441
10.6.89 Security Settings-Function Management Setting 445
10.6.90 Security Settings-Stamp Settings 446
10.6.91 Security Settings-Image Log Transfer Settings 447
10.6.92 Security Settings-Driver Password Encryption Setting 447
10.6.93 License Settings-Get Request Code 448
10.6.94 License Settings-Install License 448
10.6.95 License Settings-List of Enabled Functions 448
10.6.96 OpenAPI Authentication Management-Restriction Code Setting 449
10.7 Banner Printing 449
10.8 My Panel Settings 450
10.9 Device Information 450
11. ADJUSTMENT ITEM LIST 452
12. SERVICE MODE 454
12.1 List of service mode 454
12.2 Starting/Exiting 459
12.2.1 Starting procedure 459
12.3 Date/Time Input mode 460
12.4 Machine 461
12.4.1 Color Alignment Adjustment 461
12.4.2 Fusing Temperature 462
12.4.3 Fusing Transport Speed 463
12.4.4 Org. Size Detecting Sensor Adj. 464
12.4.5 Printer Area-Leading Edge Adjustment 465
12.4.6 Printer Area-Centering 466
12.4.7 Printer Area-Leading Edge Adj. (Duplex Side 2) 467
12.4.8 Printer Area-Centering (Duplex 2nd Side) 468
12.4.9 Printer Area-Paper Feed Direction Adj. 469
12.4.10 Scan Area 470
12.4.11 Scan Area-Image Position: Leading Edge 471
12.4.12 Scan Area-Image Position: Side Edge 472
12.4.13 Scan Area-Cross Direction Adjustment 473
12.4.14 Scan Area-Feed Direction Adjustment 474

12.4.15 Printer Resist Loop 475
12.4.16 Color Registration Adjustment-Cyan, Magenta, Yellow 476
12.4.17 Skew adjustment-Skew adjustment 477
12.4.18 Skew adjustment-Skew adjustment reset 477
12.4.19 LD adjustment-LD delay adjust. 478
12.4.20 LD adjustment-LD lightness balance adjust. 479
12.4.21 Manual Bypass Tray Adjustment 480
12.4.22 Lead Edge Erase Adjustment 480
12.4.23 Thick Paper Mode 480
12.4.24 Split Line Prior Detection 481
12.4.25 Non-Image Area Erase Check 481
12.5 Firmware Version 482
12.6 Imaging Process Adjustment 482
12.6.1 Gradation Adjust 482
12.6.2 Transfer Belt-Cleaning Bias 483
12.6.3 Transfer Belt-Auto Cleaning 484
12.6.4 D Max Density 484
12.6.5 TCR Level Setting 485
12.6.6 Background Voltage Margin 485
12.6.7 Transfer Output Fine Adjustment-Primary transfer adj. 486
12.6.8 Transfer Output Fine Adjustment-Secondary transfer adj. 487
12.6.9 Stabilizer-Stabilization Only 487
12.6.10 Stabilizer-Initialize+Image Stabilization 488
12.6.11 Thick Paper Density Adjustment 488
12.6.12 Paper separation adjustment 489
12.6.13 TCR Toner Supply 489
12.6.14 Monochrome Density Adjustment 490
12.6.15 Development AC Voltage Choice 490
12.7 CS Remote Care 491
12.7.1 Outlines 491
12.7.2 Setting up the CS Remote Care 491
12.7.3 Software SW setting for CS Remote Care 496
12.7.4 Setup confirmation 505
12.7.5 Calling the maintenance 505
12.7.6 Calling the center from the administrator 506
12.7.7 Checking the transmission log 506
12.7.8 Detail on settings 506
12.7.9 List of the CS Remote Care error code 515

12.7.10 Troubleshooting for CS Remote Care 522
12.7.11 CS Remote Care Operation under Enhanced Security Mode 522
12.8 System 1 523
12.8.1 Marketing Area 523
12.8.2 Tel/Fax Number 524
12.8.3 Serial Number 524
12.8.4 No Sleep 525
12.8.5 Foolscap Size Setting 525
12.8.6 Original Size Detection 525
12.8.7 Install Date 526
12.8.8 Initialization-Clear All Data 526
12.8.9 Initialization-Clear Individual Data 526
12.8.10 Initialization-System Error Clear 528
12.8.11 Charging CH cleaning-Cleaning 528
12.8.12 Charging CH cleaning-Self-Cleaning 528
12.8.13 Trouble Isolation 529
12.8.14 Post card transfer table 529
12.8.15 Change Warm Up Time 529
12.8.16 Machine State LED Setting 530
12.9 System 2 531
12.9.1 HDD 531
12.9.2 Image Controller Setting 531
12.9.3 Option Board Status 532
12.9.4 Consumable Life Reminder 532
12.9.5 Unit Change 533
12.9.6 Software Switch Setting 533
12.9.7 Software Switch Setting-Setting items in the software switch setting 534
12.9.8 Scan Caribration 535
12.9.9 LCC Size Setting 535
12.9.10 LCT Paper Size Setting 535
12.9.11 Line Mag Setting 536
12.9.12 Data Capture 536
12.9.13 Split Line Detect. Setting-Prior Detection 538
12.9.14 Split Line Detect. Setting-Warning Level 539
12.9.15 Split Line Detect. Setting-Paper Passaging Detection 539
12.9.16 Stamp 539
12.9.17 Network Fax Settings 540
12.9.18 Image Stabilization Setting 540

12.9.19 User Paper Settings 541
12.9.20 Coverage Rate Screen 542
12.9.21 JAM Code Display Setting 542
12.9.22 BootUp Screen 542
12.9.23 Install Data 543
12.9.24 Bluetooth Settings 544
12.10 Counter 544
12.10.1 Common procedure 544
12.10.2 Life 544
12.10.3 Service Call Counter 546
12.10.4 Section Service Call 546
12.10.5 Warning 546
12.10.6 Maintenance 547
12.10.7 Service Total 547
12.10.8 Counter of Each Mode 548
12.10.9 Service Call History (Data) 548
12.10.10 ADF Paper Pages 548
12.10.11 Paper Jam History 548
12.10.12 Fax Connection Error 548
12.10.13 Split Line Counter 549
12.10.14 Parts Counter (Fixed) 549
12.10.15 Jam 551
12.10.16 Section JAM 551
12.11 List Output 551
12.11.1 Machine Management List 551
12.11.2 Adjustment List 551
12.11.3 Parameter List 551
12.11.4 Service Parameter 551
12.11.5 Protocol Trace 551
12.11.6 Fax Setting List 551
12.11.7 Fax Analysis List 552
12.12 State Confirmation 552
12.12.1 Sensor Check 552
12.12.2 Sensor check screens 553
12.12.3 Sensor check list 560
12.12.4 Table Number 573
12.12.5 Level History1 574
12.12.6 Level History 2 574

12.12.7 Temp. & Humidity 574
12.12.8 CCD Check 575
12.12.9 Memory/HDD Adj.-Memory Check 575
12.12.10 Memory/HDD Adj.-Compress / Decompression Check 576
12.12.11 Memory/HDD Adj.-Memory Bus Check 576
12.12.12 Memory/HDD Adj.-DSC Bus Check 576
12.12.13 Memory/HDD Adj.-HDD R/W Check 577
12.12.14 Memory/HDD Adj.-HDD Format 577
12.12.15 Memory/HDD State 577
12.12.16 Color Regist 578
12.12.17 IU Lot No. 578
12.12.18 Adjustment Data List 578
12.13 Test Mode 579
12.13.1 Procedure for test pattern output 579
12.13.2 Gradation Pattern 579
12.13.3 Halftone Pattern 580
12.13.4 Lattice Pattern 581
12.13.5 Solid Pattern 582
12.13.6 Color Sample 582
12.13.7 8 Color Solid Pattern 583
12.13.8 CMM pattern 583
12.13.9 Running Mode 584
12.13.10 Fax Test 584
12.14 ADF 585
12.14.1 Original Stop Position 585
12.14.2 Registration Loop Adj. 586
12.14.3 Auto Stop Position Adjustment 587
12.14.4 Paper Passage 589
12.14.5 Sensor Check 590
12.14.6 Original Tray Width 592
12.14.7 Read Pos Adj 593
12.14.8 Feed Zoom 595
12.14.9 Scanning Light Adjustment 596
12.14.10 Mixed original Size adjustment 596
12.15 FAX 596
12.16 Finisher 597
12.16.1 FS-FN adjustment - Center Staple Position 597
12.16.2 FS-FN adjustment - Half-Fold Position 598

12.16.3 FS-FN adjustment - Punch Vertical Position 599
12.16.4 FS-FN adjustment - Punch Horizontal Position 600
12.16.5 FS-FN adjustment - Punch edge detection 601
12.16.6 FS-FN adjustment - Punch vertical position (Z-fold) 602
12.16.7 FS-FN adjustment - Punch horizontal position (Z-fold) 603
12.16.8 FS-FN adjustment - Punch regist adj. (Z-fold) 603
12.16.9 FS-FN adjustment - Punch Regist Loop Size (Body) 604
12.16.10 FS-FN adjustment - Punch Resist Loop Size (PI) 604
12.16.11 FS-FN adjustment - 1st Z-Fold Position
FS-FN adjustment - 2nd Z-Fold Position 605
12.16.12 FS-FN adjustment - Tri-Fold Position 606
12.16.13 FS-FN adjustment - Center-staple pitch adjustment 607
12.16.14 FS-FN adjustment - PI Size Detection 607
12.16.15 FS-FN adjustment - Post Inserter Adjustment 608
12.16.16 FS-FN adjustment - finisher check 608
12.16.17 FS-FN adjustment - Load Data 611
12.16.18 FS-FN adjustment - Side position adjustment 612
12.16.19 FS-FN adjustment - Punch unit edge detection 612
12.16.20 Staple Option Setting 613
12.16.21 Punch Option Setting 613
12.16.22 Fold power of pages restrict 614
12.16.23 Job Separator 614
12.17 Internet ISW 615
12.17.1 Internet ISW Set 615
12.17.2 HTTP Setting 615
12.17.3 HTTP Setting-Data Input Setting 615
12.17.4 HTTP Setting-Connect Proxy 615
12.17.5 HTTP Setting-Proxy Server 616
12.17.6 HTTP Setting-Proxy Authentication 616
12.17.7 HTTP Setting-Connection Time-Out 616
12.17.8 FTP Setting 616
12.17.9 FTP Setting-Data Input Setting 616
12.17.10 FTP Setting-Connect Proxy 617
12.17.11 FTP Setting-Proxy Server 617
12.17.12 FTP Setting-Connection Setting 617
12.17.13 Forwarding Access Setting-User ID 617
12.17.14 Forwarding Access Setting-Password 618
12.17.15 Forwarding Access Setting-URL 618

12.17.16 Forwarding Access Setting-FileName ... 618
12.17.17 Download ... 618
13. ENHANCED SECURITY ... 619
13.1 List of Enhanced Security ... 619
13.2 Starting/Exiting ... 619
13.2.1 Starting procedure ... 619
13.2.2 Exiting procedure ... 619
13.3 Enhanced Security ... 620
13.3.1 CE Password ... 620
13.3.2 Administrator Password ... 620
13.3.3 Administrator Feature Level ... 621
13.3.4 CE Authentication ... 621
13.3.5 IU Life Stop Setting ... 622
13.3.6 NVRAM Data Backup ... 622
13.3.7 Operation Ban release time ... 622
13.3.8 Administrator unlocking ... 623
13.3.9 Engine FW DipSW ... 623
14. BILLING SETTING ... 626
14.1 List of billing setting ... 626
14.2 Starting/Exiting ... 626
14.2.1 Starting procedure ... 626
14.2.2 Exiting procedure ... 626
14.3 Billing Setting ... 627
14.3.1 Counter Setting ... 627
14.3.2 Management Function Choice ... 630
14.3.3 Management Function Choice-Key Counter IF Vendor ... 630
14.3.4 Management Function Choice-Authentication Device 1 ... 630
14.3.5 Management Function Choice-Authentication Device 2 ... 631
14.3.6 Management Function Choice-Key Counter Only ... 633
14.3.7 Management Function Choice-Management Device 1 ... 634
14.3.8 Management Function Choice-Management Device 2 ... 634
14.3.9 Management Function Choice-Vendor 1 ... 634
14.3.10 Management Function Choice-Vendor 2 ... 635
14.3.11 Coverage Rate Clear ... 638
14.3.12 OpenAPI Authentication Management-Restriction Code ... 639
14.3.13 OpenAPI Authentication Management-Region Code ... 639
15. CONTENTS TO BE CLEARED BY RESET FUNCTION ... 640
16. MECHANICAL ADJUSTMENT ... 641

16.1 Mechanical adjustment of the scanner section 641
16.1.1 Adjustment of the scanner motor belt 641
16.1.2 Focus positioning of the scanner and mirrors unit 642
16.1.3 Scanner position adjustment 643
16.1.4 Adjusting the height of the original glass moving unit 644
16.1.5 Adjusting the height of the guide support for the original glass moving unit 646
16.2 Mechanical adjustment of the paper feed section 647
16.2.1 Tray3/4 paper size change 647
16.2.2 Skew adjustment of the tray 1/2 648
16.2.3 Centering adjustment of the tray 1/2 649
16.2.4 Centering adjustment of the tray 3/4 650
16.2.5 Pick-up roller load adjustment of the tray 3/4 651
16.3 Mechanical adjustment of the bypass tray section 652
16.3.1 Adjustment of the bypass paper size unit 652
16.4 Mechanical adjustment of the main drive unit section 654
16.4.1 PC drive gear positioning adjustment 654

TROUBLESHOOTING

17. JAM DISPLAY 657
17.1 List of JAM code 657
17.1.1 Misfeed display resetting procedure 670
17.2 Sensor layout 671
17.2.1 Main body 671
17.2.2 ADF 672
17.2.3 LU-204/LU-301 673
17.2.4 JS-504 674
17.2.5 ZU-606 675
17.2.6 FS-526/SD-508/PK-516 676
17.2.7 JS-602 677
17.2.8 PI-505 677
17.2.9 FS-527/SD-509/PK-517/JS-603 678
17.3 Solution 679
17.3.1 Initial check items 679
17.3.2 Misfeed at manual bypass feed section 679
17.3.3 Misfeed at tray 1 feed section 680
17.3.4 Misfeed at tray 2 feed section 680
17.3.5 Misfeed at tray 3 feed section 681

17.3.6 Misfeed at tray 4 feed section 681
17.3.7 Misfeed at tray 3/4 horizontal transport section 682
17.3.8 Misfeed at tray 3/4 intermediate transport roller section 682
17.3.9 LCT feed section 683
17.3.10 LCT transport section 683
17.3.11 Misfeed at vertical transport section 684
17.3.12 Misfeed at 2nd image transfer section 684
17.3.13 Misfeed at exit section 685
17.3.14 ADF turnover section 685
17.3.15 ADF paper feed section 686
17.3.16 ADF transport section 686
17.3.17 ADF paper exit section 687
17.3.18 ADF image reading section 687
17.3.19 Code: 72-11 688
17.3.20 Code: 72-13 688
17.3.21 Code: 72-14 688
17.3.22 Code: 72-15 689
17.3.23 Code: 72-16 690
17.3.24 Code: 72-17 690
17.3.25 Code: 72-18 691
17.3.26 Code: 72-19 692
17.3.27 Code: 72-21 692
17.3.28 Code: 72-22 693
17.3.29 Code: 72-23 694
17.3.30 Code: 72-25 / 72-26 694
17.3.31 Code: 72-31 / 72-34 695
17.3.32 Code: 72-35 695
17.3.33 Code: 72-38 695
17.3.34 Code: 72-39 696
17.3.35 Code: 72-40 696
17.3.36 Code: 72-41 / 72-42 696
17.3.37 Code: 72-43 697
17.3.38 Code: 72-44 697
17.3.39 Code: 72-45 698
17.3.40 Code: 72-46 698
17.3.41 Code: 72-47 698
17.3.42 Code: 72-49 699

17.3.43 Code: 72-50 699
17.3.44 Code: 72-51 699
17.3.45 Code: 72-60 700
17.3.46 Code: 72-61 700
17.3.47 Code: 72-62 700
17.3.48 Code: 72-64 701
17.3.49 Code: 72-81 701
17.3.50 Code: 72-84 702
17.3.51 Code: 72-85 702
17.3.52 Code: 72-86 703
17.3.53 Code: 72-87 703
17.3.54 Code: 72-90 703
17.3.55 Code: 75-42 704
17.3.56 Code: 75-43 704
17.3.57 Misfeed at duplex pre-registration section 705
17.3.58 Misfeed at duplex transport section 705
18. MALFUNCTION CODE 706
18.1 Display procedure 706
18.2 List 707
18.3 Solution 710
18.3.1 S-1: CCD gain adjustment failure 710
18.3.2 D-1: Split line detect 710
18.3.3 D-2: ADF read guide trouble 710
18.3.4 P-5: IDC sensor (front) failure 711
18.3.5 P-28 IDC sensor (rear) failure 711
18.3.6 P-6: Cyan imaging unit failure 711
18.3.7 P-7: Magenta imaging unit failure 711
18.3.8 P-8: Yellow imaging unit failure 711
18.3.9 P-9: Black imaging unit failure 711
18.3.10 P-14: Skew correction trouble 712
18.3.11 P-16: PC charge cleaning trouble 1 712
18.3.12 P-18: PC charge cleaning trouble 2 712
18.3.13 P-21: Color regist test pattern failure 713
18.3.14 P-22: Color regist adjust failure 713
18.3.15 P-27: Secondary transfer ATVC failure 713
18.3.16 P-31: PC home sensor (K) malfunction 714
18.3.17 P-32: Heating roller temperature sensor /1 temperature detection failure 714
19. TROUBLE CODE 715

19.1 Display procedure 715
19.2 Trouble resetting procedure 715
19.2.1 Trouble resetting procedure by Trouble Reset key 715
19.3 Trouble isolation function 716
19.4 List 716
19.5 Solution 759
19.5.1 C0104: Tray 3/4 feeder transportation motor failure to turn 759
19.5.2 C0105: Tray 3/4 feeder transportation motor turning at abnormal timing . 759
19.5.3 C0202: Tray 1 feeder up/down abnormality 759
19.5.4 C0204: Tray 2 feeder up/down abnormality 760
19.5.5 C0206: Tray 3 feeder up/down abnormality 760
19.5.6 C0208: Tray 4 feeder up/down abnormality 761
19.5.7 C0216: LCT up/down abnormality 761
19.5.8 C0301: Suction fan motor's failure to turn 762
19.5.9 C0351: Paper cooling fan trouble 762
19.5.10 C1003: PK communication error 763
19.5.11 C1004: FNS communication error 763
19.5.12 C1005: ZU communication error 763
19.5.13 C1081: SD communication error 764
19.5.14 C1102: Main tray Up/Down motor malfunction 764
19.5.15 C1103: Side-staple front adjust drive motor malfunction 765
19.5.16 C1104: Paper exit roller drive motor malfunction 765
19.5.17 C1105: Paper exit auxiliary roller motor malfunction 766
19.5.18 C1106: Side-staple stapler drive malfunction 766
19.5.19 C1109: Side-staple stapler motor drive malfunction 767
19.5.20 C1110: Center-staple head roller motor malfunction 767
19.5.21 C1112: Center-staple clinch roller motor malfunction 768
19.5.22 C1113: Center-staple lead edge stopper motor malfunction 768
19.5.23 C1114: Center-staple front adjust drive motor malfunction 769
19.5.24 C1115: Center-staple knife drive motor malfunction 770
19.5.25 C1116: Center-staple transfer motor malfunction 771
19.5.26 C1124: Sheet feeder up/down drive failure (lower) 772
19.5.27 C1125: Sheet feeder up/down drive failure (upper) 773
19.5.28 C1127: Punch shift motor drive malfunction 773
19.5.29 C1130: 1st stopper motor drive malfunction 774
19.5.30 C1131: 2nd folding stopper motor drive malfunction 774
19.5.31 C1132: Output OP punch driving motor malfunction 775
19.5.32 C1133: Punch shift motor drive malfunction 775

19.5.33 C1134: Main motor cooling fan drive malfunction 776
19.5.34 C1135: Punch motor drive malfunction 776
19.5.35 C1136: Punch switchover motor drive malfunction 777
19.5.36 C1140: Side-staple rear adjust drive motor malfunction 777
19.5.37 C1141: Side-staple paddle roller motor malfunction 778
19.5.38 C1142: Side-staple trailing paddle up-down motor malfunction 778
19.5.39 C1143: Side-staple rewinding paddle up-down motor malfunction 779
19.5.40 C1144: Spare stacker board drive motor malfunction 779
19.5.41 C1145: End stopper drive motor malfunction 780
19.5.42 C1150: Center-staple rear adjust drive motor malfunction 780
19.5.43 C1151: Center-staple stapler drive motor malfunction 781
19.5.44 C1152: Center-staple paper exit motor malfunction 782
19.5.45 C1153: Center-staple paddle up-down motor malfunction (trailing edge) 782
19.5.46 C1156: Center-staple paddle roller motor malfunction (trailing edge) 783
19.5.47 C1157: Center-staple paddle roller motor malfunction (middle) 784
19.5.48 C1182: Shift motor drive malfunction 784
19.5.49 C1183: Elevate drive malfunction 785
19.5.50 C1190: Alignment plate motor drive malfunction 786
19.5.51 C1194: Leading edge stopper motor drive malfunction 786
19.5.52 C11A1: Tray 2 exit roller pressure/ retraction malfunction 787
19.5.53 C11A2: Accommodation roller pressure/ retraction malfunction 787
19.5.54 C11A7: Tray 3 exit roller pressure/ retraction malfunction 788
19.5.55 C11B0: Stapler movement drive malfunction 788
19.5.56 C11B2: Staple drive malfunction 789
19.5.57 C11B5: Saddle stapler drive malfunction 789
19.5.58 C11C0: Punch motor drive malfunction 790
19.5.59 C11E0: Duplex path switching motor drive malfunction / Finisher route change malfunction 790
19.5.60 C11E1: Upper lower path switching motor drive malfunction 791
19.5.61 C11E2: Tray1 path switching motor drive malfunction 792
19.5.62 C2101: PC charge cleaning malfunction 792
19.5.63 C2151: Secondary transfer roller pressure welding alienation 793
19.5.64 C2152: Transfer belt pressure welding alienation 793
19.5.65 C2160: PC charge (C) malfunction 794
19.5.66 C2161: PC charge (M) malfunction 794
19.5.67 C2162: PC charge (Y) malfunction 794
19.5.68 C2163: PC charge (K) malfunction 794
19.5.69 C2164: PC charge malfunction 794

19.5.70 C2204: Waste toner agitating motor's failure to turn 794
19.5.71 C2253: Color PC drum motor's failure to turn 795
19.5.72 C2254: Color PC drum motor's turning at abnormal timing 795
19.5.73 C2255: Color developing motor's failure to turn 795
19.5.74 C2256: Color developing motor's turning at abnormal timing 795
19.5.75 C2257: Cleaner motor's failure to turn 796
19.5.76 C2258: Cleaner motor's turning at abnormal timing 796
19.5.77 C2259: K developing motor's failure to turn 796
19.5.78 C225A: K developing motor's turning at abnormal timing 796
19.5.79 C225B: K PC drum motor's failure to turn 797
19.5.80 C225C: K PC drum motor's turning at abnormal timing 797
19.5.81 C2350: Toner suction fan motor's failure to turn 797
19.5.82 C2353: IU cooling fan motor's failure to turn 798
19.5.83 C2354: Rear side cooling fan motor's failure to turn 798
19.5.84 C2551: Abnormally low toner density detected cyan TCR sensor 799
19.5.85 C2553: Abnormally low toner density detected magenta TCR sensor 799
19.5.86 C2555: Abnormally low toner density detected yellow TCR sensor 799
19.5.87 C2552: Abnormally high toner density detected cyan TCR sensor 800
19.5.88 C2554: Abnormally high toner density detected magenta TCR sensor 800
19.5.89 C2556: Abnormally high toner density detected yellow TCR sensor 800
19.5.90 C2557: Abnormally low toner density detected black TCR sensor 800
19.5.91 C2558: Abnormally high toner density detected black TCR sensor 801
19.5.92 C2559: Cyan TCR sensor adjustment failure 801
19.5.93 C255A: Magenta TCR sensor adjustment failure 801
19.5.94 C255B: Yellow TCR sensor adjustment failure 801
19.5.95 C255C: Black TCR sensor adjustment failure 801
19.5.96 C2561: Cyan TCR sensor failure 802
19.5.97 C2562: Magenta TCR sensor failure 802
19.5.98 C2563: Yellow TCR sensor failure 802
19.5.99 C2564: Black TCR sensor failure 802
19.5.100 C2650: Main backup media access error 803
19.5.101 C2651: EEPROM access error (Imaging unit/C) 804
19.5.102 C2652: EEPROM access error (Imaging unit/M) 804
19.5.103 C2653: EEPROM access error (Imaging unit/Y) 804
19.5.104 C2654: EEPROM access error (Drum unit/K) 804
19.5.105 C2A14: Drum unit/K new release failure 804
19.5.106 C2A21: Toner cartridge/C new release failure 804

19.5.107 C2A22: Toner cartridge/M new release failure 804
19.5.108 C2A23: Toner cartridge/Y new release failure 804
19.5.109 C2A24: Toner cartridge/K new release failure 804
19.5.110 C3101: Fusing roller separation failure 805
19.5.111 C3102: Fusing roller failure to turn 805
19.5.112 C3201: Fusing motor failure to turn 806
19.5.113 C3202: Fusing motor turning at abnormal timing 806
19.5.114 C3303: Fusing cooling fan motor/ 1 failure to turn 806
19.5.115 C3304: Fusing cooling fan motor/ 2 failure to turn 807
19.5.116 C3305: Fusing cooling fan motor/ 3 failure to turn 807
19.5.117 C3424: Fusing heaters trouble (soaking side) 808
19.5.118 C3425: Fusing heaters trouble (NC sensor) 808
19.5.119 C3721: Fusing abnormally high temperature detection (Center of the heating roller) 809
19.5.120 C3722: Fusing abnormally high temperature detection (Edge of the heating roller) 809
19.5.121 C3725: Fusing abnormally high temperature detection (NC sensor) 809
19.5.122 C3724: Fusing abnormally high temperature detection (soaking side) 809
19.5.123 C3822: Fusing abnormally low temperature detection (Edge of the heating roller) 810
19.5.124 C3825: Fusing abnormally low temperature detection (NC sensor) 810
19.5.125 C3824: Fusing abnormally low temperature detection (soaking side) 810
19.5.126 C3921: Fusing sensor wire breaks detection (Center of the heating roller) 811
19.5.127 C3922: Fusing sensor wire breaks detection (Edge of the heating roller) 811
19.5.128 C3925: Fusing sensor wire breaks detection (NC sensor) 811
19.5.129 C3924: Fusing sensor wire breaks detection (soaking side) 811
19.5.130 C392A: Fusing sensor contamination (NC sensor) 812
19.5.131 C3B02: IH malfunction (CPU) 813
19.5.132 C3B03: IH malfunction (monitor) 813
19.5.133 C3B05: IH temperature sensor defect 813
19.5.134 C3B06: IH surge error 813
19.5.135 C3B07: IH input power error 813
19.5.136 C3B08: IH input voltage error 813
19.5.137 C4101: Polygon motor rotation trouble 814
19.5.138 C4301: PH cooling fan motor failure to turn 814
19.5.139 C4501: Laser malfunction 815
19.5.140 C5104: Transfer belt motor's failure to turn 815
19.5.141 C5105: Transfer belt motor's turning at abnormal timing 815

19.5.142 C5304: IH cooling fan motor/1's failure to turn 816
19.5.143 C5306: IH cooling fan motor/2's failure to turn 816
19.5.144 C5351: Power supply cooling fan motor/1's failure to turn 817
19.5.145 C5354: Ozone ventilation fan motor's failure to turn 817
19.5.146 C5356: Cooling fan motor's failure to turn 818
19.5.147 C5370: MFP control board cooling fan motor's failure to turn 818
19.5.148 C5372: MFP control board CPU temperature failure 819
19.5.149 C6102: Drive system home sensor malfunction 819
19.5.150 C6103: Slider over running 819
19.5.151 C6301: Optical cooling fan motor's failure to turn 820
19.5.152 C6704: Image input time out 820
19.5.153 C6751: CCD clamp/gain adjustment failure 821
19.5.154 C6752: ASIC clock input error (front side) 821
19.5.155 C6753: ASIC clock input error (back side) 821
19.5.156 C6901: DSC board mount failure 1 822
19.5.157 C6902: DSC board bus check NG1-1 822
19.5.158 C6903: DSC board bus check NG1-2 822
19.5.159 C6F01: Scanner sequence trouble 1 822
19.5.160 C8101: Before reading pressure welding alienation mechanism 822
19.5.161 C8102: Turn around pressure welding alienation trouble 823
19.5.162 C8103: Lift up mechanism trouble (Upward movement) 823
19.5.163 C8104: Glass movement trouble 824
19.5.164 C8106: Lift up mechanism failure (Downward movement) 824
19.5.165 C8302: Cooling fan failure 825
19.5.166 C8401: EEPROM failure 825
19.5.167 C9401: Exposure turning on the lamp trouble detection 826
19.5.168 C9402: Exposure turning on the lamp abnormally detection 826
19.5.169 CA051: Standard controller configuration failure 826
19.5.170 CA052: Controller hardware error 826
19.5.171 CA053: Controller start failure 826
19.5.172 CC001: Vendor connection failure 827
19.5.173 CC151: ROM contents error upon startup (MSC) 827
19.5.174 CC152: ROM contents error upon startup (Scanner) 827
19.5.175 CC153: ROM contents error upon startup (PRT) 827
19.5.176 CC155: Finisher ROM error 827
19.5.177 CC156: ADF ROM error 828
19.5.178 CC157: Finisher ROM error (RU) 828

19.5.179 CC158: Finisher ROM error (ZU) 828
19.5.180 CC159: ROM contents error upon startup (DSC1) 829
19.5.181 CC15A: ROM contents error upon startup (DSC2) 829
19.5.182 CC15B: Finisher ROM error (SD) 829
19.5.183 CC163: ROM contents error (PRT) 830
19.5.184 CC164: ROM contents error (MSC) 831
19.5.185 CC165: ROM contents error (ADF) 831
19.5.186 CC170: Dynamic link error during starting (AP0) 832
19.5.187 CC171: Dynamic link error during starting (AP1) 832
19.5.188 CC172: Dynamic link error during starting (AP2) 832
19.5.189 CC173: Dynamic link error during starting (AP3) 832
19.5.190 CC174: Dynamic link error during starting (AP4) 832
19.5.191 CC180: Dynamic link error during starting (LDR) 832
19.5.192 CC181: Dynamic link error during starting (IBR) 832
19.5.193 CC182: Dynamic link error during starting (IID) 832
19.5.194 CC183: Dynamic link error during starting (IPF) 832
19.5.195 CC184: Dynamic link error during starting (IMY) 832
19.5.196 CC185: Dynamic link error during starting (SPF) 832
19.5.197 CC186: Dynamic link error during starting (OAP) 832
19.5.198 CC190: Outline font load error 832
19.5.199 CD002: JOB RAM save error 833
19.5.200 CD004: Hard disk access error (connection failure) 833
19.5.201 CD00F: Hard disk data transfer error 833
19.5.202 CD020: Hard disk verify error 833
19.5.203 CD010: Hard disk unformat 833
19.5.204 CD011: Hard disk out of specifications mounted 834
19.5.205 CD041 to CD046: HDD command execution error Address Mark Not Found 834
19.5.206 CD047 to CD04B: HDD SCSI library error 834
19.5.207 CD201: File memory mounting error 835
19.5.208 CD202: Memory capacity discrepancy 835
19.5.209 CD203: Memory capacity discrepancy 2 835
19.5.210 CD211: PCI-SDRAM DMA operation failure 835
19.5.211 CD212: Compression/extraction timeout detection 835
19.5.212 CD231: No Fax memory at FAX board mounting 835
19.5.213 CD241: Encryption ASIC setting error 836
19.5.214 CD242: EncryptionASIC mounting error 836

19.5.215 CD252: No relay circuit boards for IC-412 mounting at IC-412 mount setting 836
19.5.216 CD261: USB host board failure 836
19.5.217 CD271: i-Option activated and additional memory not installed 837
19.5.218 CD272: i-Option activated and additional memory and HDD not installed 837
19.5.219 CD401: NACK command incorrect 838
19.5.220 CD402: ACK command incorrect 838
19.5.221 CD403: Checksum error 838
19.5.222 CD404: Receiving packet incorrect 838
19.5.223 CD405: Receiving packet analysis error 838
19.5.224 CD406: ACK receiving timeout 838
19.5.225 CD407: Retransmission timeout 838
19.5.226 CE001: Abnormal message queue 838
19.5.227 CE003: Task error 838
19.5.228 CE004: Event error 838
19.5.229 CE005: Memory access error 838
19.5.230 CE006: Header access error 838
19.5.231 CE007: DIMM initialize error 838
19.5.232 CD3##: NVRAM data error 839
19.5.233 CE002: Message and method parameter failure 840
19.5.234 CEEE1: MFP board malfunction 840
19.5.235 CEEE2: Scanner section malfunction 840
19.5.236 CEEE3: Printer control board malfunction 841
20. NETWORK ERROR CODE 842
20.1 Display procedure 842
20.2 List 842
21. POWER SUPPLY TROUBLE 854
21.1 Machine is not energized at all (DCPU operation check) 854
21.2 Fusing heaters do not operate 854
21.3 Power is not supplied to ADF 855
21.4 Power is not supplied to option 855
21.4.1 LU-204/301 855
21.4.2 FS-526/527 855
22. IMAGE QUALITY PROBLEM 856
22.1 How to read element date 856
22.1.1 Table number 856
22.1.2 Level history 1 857
22.1.3 Level history 2 858

22.2 How to identify problematic part 859
22.2.1 Initial check items 859
22.3 Solution 862
22.3.1 Scanner system: white lines, white bands, colored lines and colored bands in sub scan direction 862
22.3.2 Scanner system: white lines, white bands, colored lines and colored bands in main scan direction 864
22.3.3 Scanner system: color spots 865
22.3.4 Scanner system: fog 866
22.3.5 Scanner system: blurred image, blotchy image 867
22.3.6 Scanner system: incorrect color image registration, sync shift (lines in main scan direction) 868
22.3.7 Scanner system: moire 869
22.3.8 Scanner system: skewed image 870
22.3.9 Scanner system: distorted image 871
22.3.10 Scanner system: low image density, rough image 872
22.3.11 Scanner system: defective ACS 873
22.3.12 Scanner system: blank copy, black copy 874
22.3.13 Scanner system: abnormal image 875
22.3.14 Scanner system: uneven density 876
22.3.15 Printer monocolor: white lines, white bands, colored lines and colored bands in sub scan direction 877
22.3.16 Printer monocolor: white lines, white bands, colored lines and colored bands in main scan direction 878
22.3.17 Printer monocolor: uneven density in sub scan direction 879
22.3.18 Printer monocolor: uneven density in main scan direction 880
22.3.19 Printer monocolor: low image density 881
22.3.20 Printer monocolor: gradation reproduction failure 883
22.3.21 Printer monocolor: foggy background 884
22.3.22 Printer monocolor: void areas, white spots 886
22.3.23 Printer monocolor: colored spots 887
22.3.24 Printer monocolor: blurred image 888
22.3.25 Printer monocolor: blank copy, black copy 889
22.3.26 Printer monocolor: uneven image 890
22.3.27 Printer 4-color: white lines, white bands, colored lines and colored bands in sub scan direction 891
22.3.28 Printer 4-color: white lines, white bands, colored lines and colored bands in main scan direction 892
22.3.29 Printer 4-color: uneven density in sub scan direction 893
22.3.30 Printer 4-color: uneven density in main scan direction 894

22.3.31 Printer 4-color: low image density ... 895
22.3.32 Printer 4-color: poor color reproduction ... 896
22.3.33 Printer 4-color: incorrect color image registration ... 897
22.3.34 Printer 4-color: void areas, white spots ... 898
22.3.35 Printer 4-color: colored spots ... 899
22.3.36 Printer 4-color: poor fusing performance, offset ... 900
22.3.37 Printer 4-color: brush effect, blurred image ... 901
22.3.38 Printer 4-color: back marking ... 902
22.3.39 Printer 4-color: uneven image ... 903
23. IC protector ... 904
23.1 Outline ... 904
23.2 IC protector list ... 904
23.2.1 Main body ... 904
23.2.2 DF-618 ... 909
23.2.3 LU-301/LU-204 ... 910
23.2.4 JS-504 ... 910
23.2.5 ZU-606 ... 911
23.2.6 FS-526 ... 911
23.2.7 SD-508 ... 913
23.2.8 PK-516 ... 914
23.2.9 PI-505 ... 914
23.2.10 FS-527 ... 914
23.2.11 SD-509 ... 916

APPENDIX

24. PARTS LAYOUT DRAWING ... 917
24.1 Main body ... 917
24.1.1 Scanner section ... 917
24.1.2 Front side ... 918
24.1.3 Back side ... 920
24.1.4 Around the write section ... 923
24.1.5 Manual bypass tray ... 924
24.1.6 Tray 1 ... 925
24.1.7 Tray 2 ... 926
24.1.8 Tray 3 ... 927
24.1.9 Tray 4 ... 928
24.1.10 2nd transfer section ... 929
24.1.11 Duplex section ... 930

24.1.12 Fusing/paper exit section 931
24.2 DF-618/SP-501 932
24.3 LU-301 (Option) 934
24.4 LU-204 (Option) 935
24.5 JS-504 (Option) 936
24.6 JS-603 (Option) 937
24.7 ZU-606 (Option) 938
24.8 OT-503 (Option) 940
24.9 FS-526 (Option) 941
24.10 SD-508 (Option) 944
24.11 PK-516 (Option) 946
24.12 JS-602 (Option) 947
24.13 PI-505 (Option) 948
24.14 FS-527 (Option) 949
24.15 SD-509 (Option) 952
24.16 PK-517 (Option) 954
25. CONNECTOR LAYOUT DRAWING 955
25.1 Main body 955
25.1.1 Printer control board (PRCB) 955
25.1.2 MFP board (MFPB) 956
25.1.3 PCI board (PCIB) 957
25.1.4 Paper feed/transport drive board (PFTDB) 957
25.1.5 PH relay board (REYB/PH) 958
25.1.6 Scanner relay board (REYB/SCAN) 958
25.1.7 Original glass position control board (OGPCB) 959
25.1.8 DF control board (DFCB) 959
25.1.9 LU drive board (LUDB) 960
25.1.10 Punch control board (PKDB) 960
25.1.11 ZU control board 961
25.1.12 FS control board (FSCB) 962
25.1.13 Interlock board (IRB) 963
25.1.14 SD drive board (SDDB) 964
25.1.15 PI drive board 965
26. RELAY CONNECTOR LAYOUT DRAWING 966
26.1 How to read the relay connector layout drawing 966
26.2 Main body 966
27. TIMING CHART 973
27.1 Main body 973
27.1.1 Timing chart in color mode 973

27.2 DF-618 974
27.2.1 1-sided mode 974
27.2.2 2-sided mode 976
27.3 LU-204 978
27.4 FS-526/SD-508 979
27.4.1 Straight paper exit mode 979
27.4.2 2 flat stitching staples mode 981
27.4.3 Saddle stitching mode 984
27.4.4 Tri-folding mode 986
27.5 ZU-606 987
27.5.1 Z-folding+Punch mode 987
27.6 FS-527/SD-509/PK-517 988
27.6.1 Shift mode 988
27.6.2 2 flat stitching staples mode 989
27.6.3 Center staples mode 990
27.6.4 Punch mode 991
27.7 JS-603 992
27.7.1 Tray3 paper exit mode 992

OUTLINE

1. SYSTEM CONFIGURATION

1.1 bizhub C652/C552

1/2 System front view

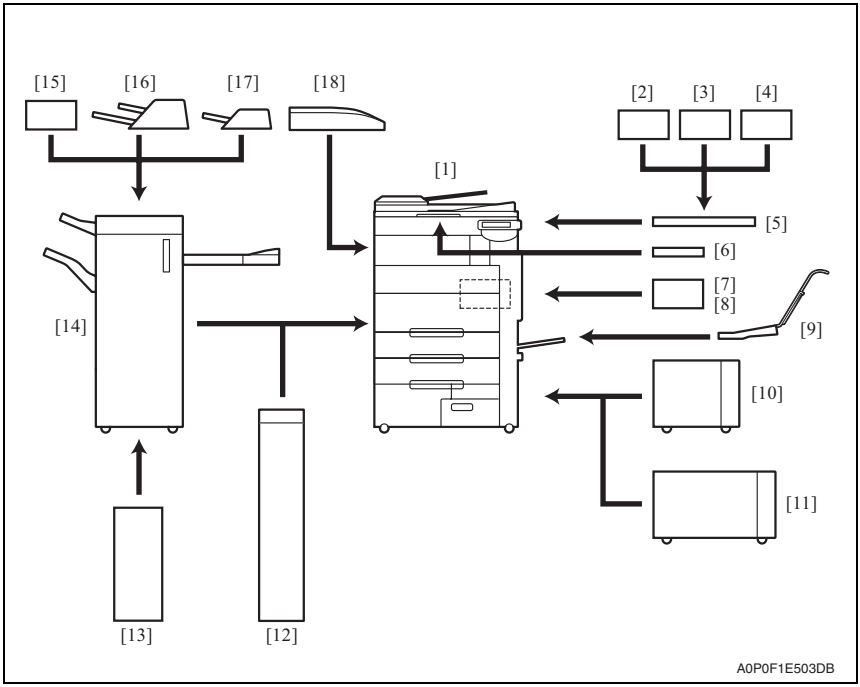

[1]	bizhub C652/552		[9]	Mount kit	MK-715 *2
[2]	Authentication unit: Biometric type	AU-101	[10]	Large capacity unit	LU-301
			[11]	Large capacity unit	LU-204
[3]	Authentication unit: Biometric type	AU-102	[12]	Z folding unit	ZU-606
			[13]	Saddle sticher	SD-508
[4]	Authentication unit: IC card type	AU-201	[14]	Finisher	FS-526
			[15]	Punch kit	PK-516
[5]	Working table	WT-506	[16]	Post inserter	PI-505
[6]	Keyboard holder	KH-101	[17]	Job separator	JS-602
[7]	Local interface kit	EK-604	[18]	Output tray	OT-503
[8]	Local interface kit	EK-605 *1			

*1: Except for China.
*2: Except for the North America and Europe area.

2/2 System rear view

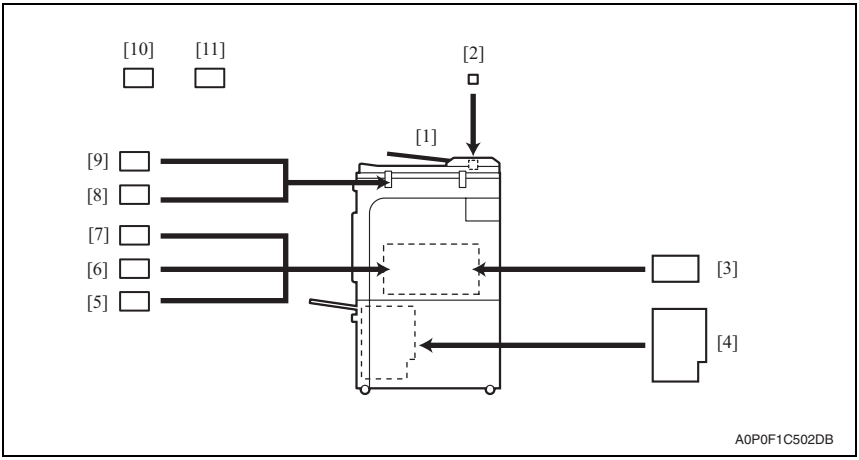

[1]	bizhub C652/552		[7]	Mount kit	MK-720
[2]	Stamp unit	SP-501	[8]	Key counter kit	KIT-1
[3]	Fax kit	FK-502	[9]	Key counter kit	KIT-CF *2
[4]	Image controller	IC-412	[10]	i-Option	LK-101 v2/102/103 v2 /105 *3
[5]	Security kit	SC-507	[11]	Upgrade kit	UK-203
[6]	Video interface kit	VI-505			

*1: Europe only
*2: Except for North America area.

1.2 bizhub C452

1/2 System front view

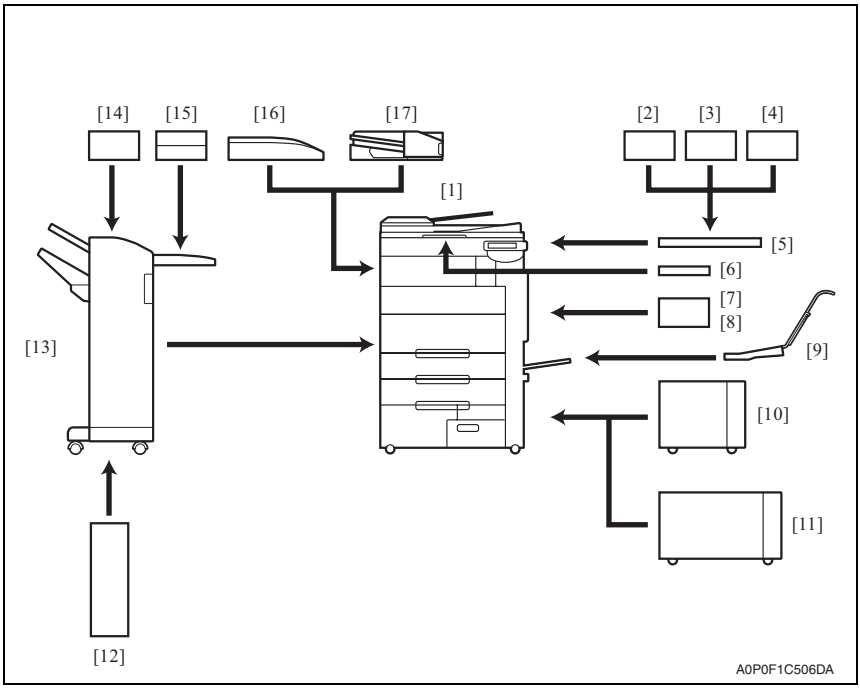

[1]	bizhub C452		[8]	Local interface kit	EK-605 *1
[2]	Authentication unit: Biometric type	AU-101	[9]	Mount kit	MK-715 *2
[3]	Authentication unit: Biometric type	AU-102	[10]	Large capacity unit	LU-301
[4]	Authentication unit: IC card type	AU-201	[11]	Large capacity unit	LU-204
[5]	Working table	WT-506	[12]	Saddle sticher	SD-509
[6]	Keyboard holder	KH-101	[13]	Finisher	FS-527
[7]	Local interface kit	EK-604	[14]	Punch kit	PK-517
			[15]	Job separator	JS-603
			[16]	Output tray	OT-503
			[17]	Job separator	JS-504

*1: Except for China.
*2: Except for the North America and Europe area.

2/2 System rear view

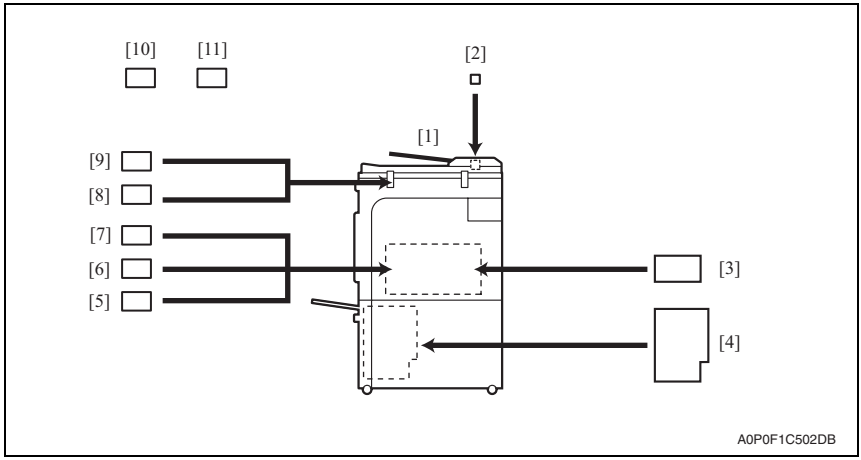

[1]	bizhub C452		[7]	Mount kit	MK-720
[2]	Stamp unit	SP-501	[8]	Key counter kit	KIT-1
[3]	Fax kit	FK-502	[9]	Key counter kit	KIT-CF *1
[4]	Image controller	IC-412	[10]	i-Option	LK-101 v2/102/103 v2 /105 *2
[5]	Security kit	SC-507	[11]	Upgrade kit	UK-203
[6]	Video interface kit	VI-505			

*1: Europe only
*2: Except for North America area.

2. PRODUCT SPECIFICATIONS

2.1 Type

Type	Combination scanner and printer console type
Copying system	Electrostatic dry-powdered image transfer to plain paper
Printing process	Laser electrostatic printing system
PC drum type	OPC drum: KM-12 (OPC with high mold releasability)
Scanning density	Main scan direction: 600 dpi, Sub scan direction: 600 dpi
Exposure lamp	White rare-gas fluorescent lamp 30 W
Platen	Stationary (mirror scan)
Original scanning	Mirror scanning CCD optical system * Sheet through system when ADF is used
Registration	Rear left edge
Paper feeding separation system	Manual bypass : Roller separation system with pick-up mechanism Tray 1 : Roller separation system with pick-up mechanism Tray 2 : Roller separation system with pick-up mechanism Tray 3 : Roller separation system with pick-up mechanism Tray 4 : Roller separation system with pick-up mechanism
Exposure system	1 polygon 2 beam x 4 LD exposure and polygon mirror scan system
Exposure density	Equivalent to 1800 dpi in main scanning direction × 600 dpi in sub scanning direction
Developing system	Dry 2 components developing method, HMT developing system
Charging system	DC comb electrode scorotron system with electrode cleaning function
Neutralizing system	Red LED system
Image transfer system	Belt image transfer system (1st)/roller image transfer system (2nd)
Paper separating system	Combination of curvature, separating claws, and bias system
Fusing system	Belt IH fusing system
Heating system	Heating: IH heating, Soaking: Halogen lamp

2.2 Functions

Types of original		Sheets, books, and three-dimensional objects
Max. original size		A3 or 11 x 17
Max. original weight		2 kg
Multiple copies		1 to 9999
Warm-up time (at ambient temperature of 23° C/73.4° F and rated source voltage)	When the sub power switch is turned ON at any timing while the main power switch remains ON for a predetermined period of time or more (room temperature is 23° C/73.4° F)	
	bizhub C652/C552/C452	30 sec. or less (Black print, Color print)
	bizhub C552: Taiwan only	60 sec. or less (Black print, Color print)
	bizhub C452: Taiwan only	30 sec. or less (Black print) 60 sec. or less (Color print)
	When the main power switch is turned ON during the sub power switch being ON (room temperature is 23° C/73.4° F)	
	bizhub C652/C552/C452	45 sec. or less (Black print, Color print)
	bizhub C552: Taiwan only	60 sec. or less (Black print, Color print)
	bizhub C452: Taiwan only	45 sec. or less (Black print) 60 sec. or less (Color print)
Image loss		Leading edge: 4.2 mm (3/16 inch), Trailing edge: 3 mm (1/8 inch), Rear edge: 3 mm (1/8 inch), Front edge: 3 mm (1/8 inch)
First copy time	(Tray1/2 A4 or 8 $^1/_2$ x 11, full size)	
	bizhub C652	3.8 sec. or less (Black print) 5.5 sec. or less (Color print)
	bizhub C552	4.3 sec. or less (Black print) 6.0 sec. or less (Color print)
	bizhub C452	4.8 sec. or less (Black print) 6.0 sec. or less (Color print)
Processing speed	Plain paper black	bizhub C652: 310.00 mm/s
		bizhub C552: 264.00 mm/s
		bizhub C452: 216.00 mm/s
	Plain paper/full color	bizhub C652: 240.00 mm/s
		bizhub C552: 216.00 mm/s
		bizhub C452: 216.00 mm/s
	Thick 1, Thick 1+	bizhub C652: 155.00 mm/s
		bizhub C552: 132.00 mm/s
		bizhub C452: 132.00 mm/s
	Thick 2, Thick 3, Thick 4, OHP, Post card, Envelope, Label sheet, glossy mode	bizhub C652: 120.00 mm/s
		bizhub C552: 108.00 mm/s
		bizhub C452: 108.00 mm/s

Copying speed for multi-copy cycle (A4 or 8 1/2 x 11, plain paper, tray 1)	Black	bizhub C652: 1-sided: 65 copies/min, 2-sided: 65 copies/min (8 1/2 x 11: 64 copies/min)		
		bizhub C552: 1-sided: 55 copies/min, 2-sided: 55 copies/min		
△1		bizhub C452: 1-sided: 45 copies/min, 2-sided: 45 copies/min		
	Full color	bizhub C652: 1-sided: 50 copies/min, 2-sided: 50 copies/min		
		bizhub C552: 1-sided: 45 copies/min, 2-sided: 45 copies/min		
△1		bizhub C452: 1-sided: 45 copies/min, 2-sided: 45 copies/min		
Fixed zoom ratios	Full size	x1.000		
	Reduction	Metric area	x0.500, x0.707, x0.816, x0.866	
		Inch area	x0.500, x0.647, x0.733, x0.785	
	Enlargement	Metric area	x1.154, x1.224, x1.414, x2.000	
		Inch area	x1.214, x1.294, x1.545, x2.000	
	Zoom ratios memory	Metric area	3 memories	
Variable zoom ratios	x0.250 to x4.000	Inch area	in 0.001 increments	
Paper size	Tray 1/Tray 2	Metric area	A3 Wide, A3 to A5S, A6S, post card	
		Inch area	11 x 17 to 8 1/2 x 11, 8 x 13 *1, 16K, 8K, 12 1/4 x 18	
	Tray 3/Tray 4	A4, B5, A5, 8 1/2 x 11, 5 1/2 x 8 1/2, 16K, postcard		
	Bypass tray	Metric area	A3 wide, A3 to B6S, A6S, postcard, long size paper (210 to 297 mm x 457 to 1,200 mm)	
		Inch area	11 x 17 to 5 1/2 x 8 1/2, 8 x 13 *1, 16K, 8K, 12 1/4 x 18, long size paper (8 1/4 to 11 11/16 x 18 to 47 1/4)	
Copy exit tray capacity (When OT-503 is mounted)	Plain paper	250 sheets		
	Thick paper	10 sheets		
	OHP transparencies	1 sheet		
△1 External memory function	Supported external memory devices	USB flash memory device that supports the USB (1.1/2.0) interface FAT32-formatted memory device		

2.3 Paper

Type		Paper source (maximum tray capacity)				
		Tray 1	Tray 2	Tray 3	Tray 4	Bypass tray
Paper type	Plain paper (64 to 90 g/m² / 17 to 24 lb)	❍ (500 sheets)	❍ (500 sheets)	❍ (1500 sheets)	❍ (1000 sheets)	❍ (150 sheets)
	Translucent paper	–	–	–	–	–
	OHP transparencies	–	–	–	–	❍ (20 sheets)*3
	Thick paper 1 *1 (91 to 120 g/m² / 24.25 to 32 lb)	❍ (400 sheets)	❍ (400 sheets)	❍ (1150 sheets)	❍ (750 sheets)	❍ (100 sheets)
	Thick paper 1+ *1 (121 to 157 g/m² / 32 to 41.75 lb)	❍ (280 sheets)	❍ (280 sheets)	❍ (800 sheets)	❍ (500 sheets)	❍ (80 sheets)
	Thick paper 2 *1 (158 to 209 g/m² / 42 to 55.5 lb)	❍ (250 sheets)	❍ (250 sheets)	❍ (700 sheets)	❍ (450 sheets)	❍ (70 sheets)
	Thick paper 3 *1,2 (210 to 256 g/m² / 55.75 to 68 lb)	❍ (200 sheets)	❍ (200 sheets)	❍ (600 sheets)	❍ (400 sheets)	❍ (60 sheets)
	Thick paper 4 *1,2 (257 to 300 g/m² / 68.25 to 80 lb)	–	–	–	–	❍ (50 sheets)
	Postcards	–	–	❍ (200 sheets)	❍ (200 sheets)	❍ (50 sheets)
	Envelopes	–	–	–	–	❍ (10 sheets)
	Labels	–	–	–	–	❍ (50 sheets)
	Long size paper *4	–	–	–	–	❍ (1 sheet)
Copy paper dimensions	Width	139.7 to 311.1 mm 5 1/2 to 12 1/2 inch		A4, B5, A5, 8 1/2 x 11, 5 1/2 x 8 1/2, 16K, postcard		90 to 311.1 mm 3 1/2 to 12 1/4 inch
	Length	182.0 to 457.2 mm 7 1/4 to 18 inch				139.7 to 457.2 mm 5 1/2 to 18 inch
Long size paper *4	Width	–	–	–	–	210 to 297 mm 8 1/4 to 11 3/4 inch
	Length	–	–	–	–	457 to 1200 mm 18 to 47 1/4 inch

*1: Excluding damp paper, curled paper, and recycled paper.
*2: Image is not guaranteed when thick paper 3/4 is used.
*3: Black print only.
*4: 127 to 210 g/m² / 33.75 to 55.75 lb
Automatic duplex unit : Only the plain paper weighing 64 to 90 g/m² (17 to 24 lb) or thick paper weighing 91 to 256 g/m² (24.25 to 68 lb) are reliably fed.

2.4 Materials

Parts name		Field standard yield *1	Type name
Toner cartridge/C		30,000 prints	TN613C
Toner cartridge/M		30,000 prints	TN613M
Toner cartridge/Y		30,000 prints	TN613Y
Toner cartridge/K		45,000 prints	TN613K
Imaging unit/C	bizhub C652	135,000 prints	IU612C
	bizhub C552	120,000 prints	
Imaging unit/M	bizhub C652	135,000 prints	IU612M
	bizhub C552	120,000 prints	
Imaging unit/Y	bizhub C652	135,000 prints	IU612Y
	bizhub C552	120,000 prints	
Developing unit/K		1,140,000 prints	DV612K
Drum unit/K		285,000 prints	DR612K
Waste toner box		48,000 prints	Waste toner box

***1: Field standard yield**

- This machine has the field standard yield which indicates the available print numbers estimated by the quantities and usage of the unit in the market standard job mode. Yields for each preventative maintenance unit will differ depending on actual usage.
- The market standard job modes for this unit are as follows.

⚠1 Market standard job modes

		bizhub C652	bizhub C552	bizhub C452
Printing	B/W	7 P/J	6 P/J	5 P/J
	Color	4 P/J	3 P/J	3 P/J
Color mode		[Full Color] or [Black] (apart from [Auto Color])		
Paper size		A4: 93 %, A4S: 7 %		
Color ratio		25 %		
Total print volume/month		US: 21,900 EU: 29,600	US: 15,700 EU: 21,200	US: 10,500 EU: 14,300
No. of image stabilization operations	No. of times power turned on	20 times/month		
	No. of returns from sleep mode	None		
	Changes in surrounding environment	None		

2.5 Print volume

- bizhub C652

US	Average	Color print	5,500 prints/month
		Black print	16,400 prints/month
	Maximum	Color print	63,000 prints/month
		Black print	187,000 prints/month
EU	Average	Color print	7,400 prints/month
		Black print	22,200 prints/month
	Maximum	Color print	63,000 prints/month
		Black print	187,000 prints/month

- bizhub C552

US	Average	Color print	3,900 prints/month
		Black print	11,800 prints/month
	Maximum	Color print	50,000 prints/month
		Black print	150,000 prints/month
EU	Average	Color print	5,300 prints/month
		Black print	15,900 prints/month
	Maximum	Color print	50,000 prints/month
		Black print	150,000 prints/month

- bizhub C452

US	Average	Color print	2,600 prints/month
		Black print	7,900 prints/month
	Maximum	Color print	38,000 prints/month
		Black print	112,000 prints/month
EU	Average	Color print	3,600 prints/month
		Black print	10,700 prints/month
	Maximum	Color print	38,000 prints/month
		Black print	112,000 prints/month

2.6 Machine specifications

- bizhub C652

Power requirements	Voltage:	AC 100 V, 120 V, 127 V, 220-240 V	
	Current:	100 V	15 A + 7A
		110 V	15 A + 7A
		120 V	16 A
		127 V	16 A
⚠1		220-240 V	10 A
	Frequency:	50 to 60 Hz ± 3 Hz	
Max power consumption		100 V	2,000 W or less
		110 V	2,000 W or less
		120 V	2,100 W or less
		127 V	2,100 W or less
⚠1		220-240 V	2,100 W or less
Dimensions		650 *1 (W) x 879 *2 (H) x 1,155 mm (H) 25.5 *1 (W) x 34.5 *2 (D) x 45.5 inch (H)	
⚠1 Space requirements		2,554 (W) x 1,525 mm (D) x 1,650 mm (H)*3 100.5 (W) x 60.0 inch (D) x 65.0 inch (H) *3	
Weight	Machine	Approx. 207.0 kg / 456.25 lb (without IU and TC)	
	IU and TC	Approx. 14.0 kg / 32.0 lb	

*1: Width when the bypass tray is closed.
⚠1 *2: Including the control panel.
*3: Space requirements are the values when the finisher tray extension, paper trays and LCU are pulled out, and the ADF is open.

- bizhub C552

Power requirements	Voltage:	AC 100 V, 120 V, 127 V, 220-240 V	
	Current:	100 V	15 A
		110 V	15 A
		120 V	16 A
		127 V	16 A
⚠1		220-240 V	10 A
	Frequency:	50 to 60 Hz ± 3 Hz	
Max power consumption		100 V	1,500 W or less
		110 V	1,500 W or less
		120 V	2,000 W or less
		127 V	2,000 W or less
⚠1		220-240 V	2,000 W or less
Dimensions		650 *1 (W) x 879 *2 (H) x 1,155 mm (H) 25.5 *1 (W) x 34.5 *2 (D) x 45.5 inch (H)	
⚠1 Space requirements		2,554 (W) x 1,525 mm (D) x 1,650 mm (H)*3 100.5 (W) x 60.0 inch (D) x 65.0 inch (H) *3	
Weight	Machine	Approx. 207.0 kg / 456.25 lb (without IU and TC)	
	IU and TC	Approx. 14.0 kg / 32.0 lb	

*1: Width when the bypass tray is closed.
⚠1 *2: Including the control panel.

*3: Space requirements are the values when the finisher tray extension, paper trays and LCU are pulled out, and the ADF is open.

⚠1 • bizhub C452

Power requirements	Voltage:	AC 100 V, 120 V, 127 V, 220-240 V	
	Current:	100 V	15 A
		110 V	15 A
		120 V	16 A
		127 V	16 A
		220-240 V	10 A
	Frequency:	50 to 60 Hz ± 3 Hz	
Max power consumption		100 V	1,500 W or less
		110 V	1,500 W or less
		120 V	2,000 W or less
		127 V	2,000 W or less
		220-240 V	2,000 W or less
Dimensions		650 *1 (W) x 879 *2 (H) x 1,155 mm (H) 25.5 *1 (W) x 34.5 *2 (D) x 45.5 inch (H)	
Space requirements		2,148 (W) x 1,525 mm (D) x 1,650 mm (H) *3 84.5 (W) x 60.0 inch (D) x 65.0 inch (H) *3	
Weight	Machine	Approx. 207.0 kg / 456.25 lb (without IU and TC)	
	IU and TC	Approx. 14.0 kg / 32.0 lb	

*1: Width when the bypass tray is closed.
*2: Including the control panel.
*3: Space requirements are the values when the finisher tray extension, paper trays and LCU are pulled out, and the ADF is open.

2.7 Operating environment

Temperature	10 to 30° C / 50 to 86° F (with a fluctuation of 10° C / 18° F or less per hour)
Humidity	15 to 85% (Relative humidity with a fluctuation of 10%/h)
Levelness	Difference between front and back, right and left should be 1 degree or under.

2.8 Print functions

	Type	Built-in printer controller	
	RAM	2 GB (shared with the main body)	
	HDD	250 GB (shared with the main body)	
	Interface	Standard	Ethernet (1000Base-T/100Base-TX/10Base-T) USB2.0/1.1
		Option	USB 2.0
	Frame type	Ethernet 802.2, Ethernet 802.3, Ethernet II, Ethernet SNAP	
	Supported protocols	TCP/IP (IPv4/IPv6), BOOTP, ARP, ICMP, DHCP, DHCPv6, AutoIP, SLP, SNMP, FTP, LPR/LPD, RAW Socket, SMB over TCP/IP, IPP, HTTP, POP, SMTP, LDAP, NTP, SSL, IPX/SPX, AppleTalk, Bonjour, NetBEUI, WebDAV, DPWS, S/MIME, IPsec, DNS, DynamicDNS, LLMNR, LLTD	
	Print speed (A4 or 8 $^1/_2$ x 11, plain paper)	Black print	C652: 1-sided: 65 ppm, 2-sided: 65 ppm (64 ppm for 8 $^1/_2$ x 11) C552: 1-sided: 55 ppm, 2-sided: 55 ppm C452: 1-sided: 45 ppm, 2-sided: 45 ppm
1		Color print	C652: 1-sided: 50 ppm, 2-sided: 50 ppm C552/C452: 1-sided: 45 ppm, 2-sided: 45 ppm
	Printer language	PCL5c/6 Emulation PCL XL ver. 2.1 Emulation PostScript 3 Emulation (3016) XPS ver.1.0	
	Print resolution	Equivalent to 1,800 dpi in main scanning direction × 600 dpi in sub scanning direction	
	Printer fonts	PCL Latin 80 Fonts Postscript 3 Emulation Latin 137 Fonts	
	Supported computer	IBM PC/AT compatible machine, Macintosh (PowerPC/Intel processor : Only MacOS X 10.4/10.5 for Intel processor)	
1	Printer driver	PCL KONICAMINOLTA driver (PCL driver)	Windows NT Workstation Version 4.0 (SP6 or later) Windows NT Server Version 4.0 (SP6 or later) Windows 2000 Professional (SP4 or later) Windows 2000 Server (SP3 or later) Windows XP Home Edition (SP1 or later) Windows XP Professional (SP1 or later) Windows Server 2003, Standard Edition (SP1 or later) Windows Server 2003, Enterprise Edition (SP1 or later) Windows Server 2003 R2, Standard Edition Windows Server 2003 R2, Enterprise Edition Windows XP Professional x64 Edition Windows Server 2003, Standard x64 Edition Windows Server 2003, Enterprise x64 Edition Windows Server 2003 R2, Standard x64 Edition Windows Server 2003 R2, Enterprise x64 Edition Windows Vista Business * Windows Vista Enterprise * Windows Vista Home Basic * Windows Vista Home Premium * Windows Vista Ultimate * Windows Server 2008 Standard * Windows Server 2008 Enterprise * * 32 bits (x86)/64 bits (x64) environment are supported

1 Printer driver	PostScript KONICAMINOLTA driver (PS driver)	Windows 2000 Professional (SP4 or later) Windows 2000 Server (SP3 or later) Windows XP Home Edition (SP1 or later) Windows XP Professional (SP1 or later) Windows Server 2003, Standard Edition (SP1 or later) Windows Server 2003, Enterprise Edition (SP1 or later) Windows Server 2003 R2, Standard Edition Windows Server 2003 R2, Enterprise Edition Windows XP Professional x64 Edition Windows Server 2003, Standard x64 Edition Windows Server 2003, Enterprise x64 Edition Windows Server 2003 R2, Standard x64 Edition Windows Server 2003 R2, Enterprise x64 Edition Windows Vista Business * Windows Vista Enterprise * Windows Vista Home Basic * Windows Vista Home Premium * Windows Vista Ultimate * Windows Server 2008 Standard * Windows Server 2008 Enterprise * * 32 bits (x86)/64 bits (x64) environment are supported
	XPS KONICAMINOLTA driver (XPS driver)	Windows Vista Business * Windows Vista Enterprise * Windows Vista Home Basic * Windows Vista Home Premium * Windows Vista Ultimate * Windows Server 2008 Standard * Windows Server 2008 Enterprise * * 32 bits (x86)/64 bits (x64) environment are supported
	PostScript PPD driver (PS-PPD)	Mac OS 9.2 or later Mac OS X 10.2.8/10.3/10.4/10.5

⚠1 Printer driver	Fax driver	Windows NT Workstation Version 4.0 (SP6 or later) Windows NT Server Version 4.0 (SP6 or later) Windows 2000 Professional (SP4 or later) Windows 2000 Server (SP3 or later) Windows XP Home Edition (SP1 or later) Windows XP Professional (SP1 or later) Windows Server 2003, Standard Edition (SP1 or later) Windows Server 2003, Enterprise Edition (SP1 or later) Windows Server 2003 R2, Standard Edition Windows Server 2003 R2, Enterprise Edition Windows XP Professional x64 Edition Windows Server 2003, Standard x64 Edition Windows Server 2003, Enterprise x64 Edition Windows Server 2003 R2, Standard x64 Edition Windows Server 2003 R2, Enterprise x64 Edition Windows Vista Business * Windows Vista Enterprise * Windows Vista Home Basic * Windows Vista Home Premium * Windows Vista Ultimate * Windows Server 2008 Standard * Windows Server 2008 Enterprise * * 32 bits (x86)/64 bits (x64) environment are supported

⚠1 2.9 Scan functions

Scanner	Scannable range	Same as the copier (Max. 11 x 17: inch area, A3: metric area)
	Scan speed (A4 or 8 1/2 x 11, Resolution 300 dpi)	78 pages/min
	Functions	Scan to E-mail, Scan to FTP, Scan to SMB, Scan to WebDAV, Scan to BOX
	Scanning resolution	200/300/400/600 dpi
TWAIN	Driver	TWAIN Driver, HDD TWAIN Driver
	Supported operating systems	Windows 2000 Professional (SP4) Windows XP Home Edition (SP3) Windows XP Professional (SP3) Windows NT 4.0 (SP6a) Windows Vista Home Basic (SP1) Windows Vista Home Premium (SP1) Windows Vista Business (SP1) Windows Vista Enterprise (SP1) Windows Vista Ultimate (SP1)
	PC	Conform to the specification of operating system
	Required memory	Conform to the specification of operating system
	Network	Computer to which TCP/IP protocol is correctly set
	Hard disk	Required 20 MB or more disk space

SMB	Supported operating systems	Windows	Windows NT4.0 Server/Workstation Windows 2000 Server/Professional Windows XP Home/Professional Windows Server 2003 each edition Windows Vista each edition Windows Server 2008 DFS function is supported only in the environment that structured with the following Windows server operating systems. • Windows 2000 Server each edition • Windows Server 2003 each edition • Windows Server 2008 Direct hosting function apply to the following operating systems. • Windows 2000 • Windows XP • Windows Vista (IPv6 function is available only when the Windows Vista is installed.)
		Samba	2.2.x 3.x
		Novell Netware	Netware 6.5 (SP6 or later)

NOTE

- **These specifications are subject to change without notice.**

MAINTENANCE

3. PERIODICAL MIANTENANCE ITEMS

3.1 Concept of periodical maintenance

⚠1 • Cleaning/replacement cycle for each maintenance item of main body/options can be evaluated with the total counter value or each life counter/fixed parts counter value of [Service mode] → [Counter] → [Life].

3.1.1 Main body

A. Periodical maintenance1 (total counter; every 100,000 counts)

No.	Section	Description/part name	Qt.	Clean	Check	Lubrication	Replace	Descriptions
1	Overall	Paper feed and image conditions	—		●			
2		Appearance	—	●	●			
3	Conveyance section	Timing roller	—	●				
4		Paper dust remover	—	●				
5	Image transfer section	Around waste toner port	—	●				
6	Processing section	Electrostatic charger wire	—	●				
7	Duplex section	Duplex transport roller	—	●				

B. Periodical maintenance 2 (life counter; every 150,000 counts)

No.	Section	Description/part name	Qt.	Clean	Check	Lubrication	Replace	Descriptions
1	Processing section	Imaging unit/Y,M,C	1				●	
2		Toner filter	1				●	*1

*1: Replace these parts when drum unit/K is replaced, or when either black 285,000 counts or color 120,000 counts is reached.

C. Periodical maintenance 3 (life counter; every 300,000 counts)

No.	Section	Description/part name	Qt.	Clean	Check	Lubrication	Replace	Descriptions
1	Manual bypass tray Tray 1 Tray 2	Pick-up roller	1				●	*1
		Feed roller	1				●	
		Separation roller assy	1				●	
2	Tray 3 Tray 4	Pick-up roller	1				●	*1
		Feed roller	1				●	
		Separation roller	1				●	
3	Processing section	Toner filter	1				●	*2
4		Drum unit/K	1				●	
5		Ozone filter	1				●	*3

*1: Replace those three parts at the same time.
*2: Replace these parts when drum unit/K is replaced, or when either black 285,000 counts or color 120,000 counts is reached.
*3: Replace it when replacing drum unit/K.

D. Periodical maintenance 4 (life counter; every 600,000 counts)

No.	Section	Description/part name	Qt.	Clean	Check	Lubrication	Replace	Descriptions
1	Conveyance section	Transfer roller unit	1				●	
2	Image transfer section	Transfer belt unit	1				●	
3	Fusing section	Fusing unit	1				●	
4		IH coil unit	1	●				*1

*1: When fusing unit is replaced.

3.1.2 Automatic document feeder (ADF)

A. Periodical maintenance 1 (life counter; every 50,000 counts)

No.	Section	Description/part name	Qt.	Clean	Check	Lubrication	Replace	Descriptions
1	Overall	Paper feed and image conditions	—		●			
2		Appearance	—	●	●			
3	Paper feed section	Pick-up roller	—	●				
4		Feed roller	—	●				
5		Separation roller	—	●				
6	Conveyance section	Roller and rolls	—	●				
7	Scanning section	Scanning guide	—	●				
8	Paper feed section	Reflective sensor section	—	●				

B. Periodical maintenance 2 (life counter; every 200,000 counts)

No.	Section	Description/part name	Qt.	Clean	Check	Lubrication	Replace	Descriptions
1	Paper feed section	Pick-up roller	2				●	*1
2		Feed roller	1				●	
3		Separation roller	1				●	

*1: Replace those three parts at the same time.

3.1.3 LU-204/301

A. Periodical maintenance 1 (life counter; every 300,000 counts)

No.	Section	Description/part name	Qt.	Clean	Check	Lubrication	Replace	Descriptions
1	Paper feed section	Pick-up roller	1				●	*1
2		Feed roller	1				●	
3		Separation roller	1				●	

*1: Replace those three parts at the same time.

⚠1 3.1.4 ZU-606

A. Periodical maintenance 1 (total counter; every 100,000 counts)

No.	Section	Description/part name	Qt.	Clean	Check	Lubrication	Replace	Descriptions
1	Overall	Paper feed and image conditions	—		●			
2		Appearance	—	●	●			
3	Punch section	Punch edge	—	●				
4	Conveyance section	Entrance guide plate	—	●				
5		Conveyance guide plate	—	●				
6		Registration roller	—	●				
7		Conveyance roller	—	●				
8		Exit guide plate	—	●				
9	Z folding section	Folding roller	—	●				
10		Folding guide plate	—	●				
11	Punch scraps conveyance section	Punch scraps box	—	●				

B. Periodical maintenance 2 (fixed parts counter; every 1,000,000 counts)

No.	Section	Description/part name	Qt.	Clean	Check	Lubrication	Replace	Descriptions
1	Punch scraps conveyance section	Punch scraps conveyance motor	1				●	
2		Punch clutch	1				●	

3.1.5 FS-526

A. Periodical maintenance 1 (total counter; every 100,000 counts)

No.	Section	Description/part name	Qt.	Clean	Check	Lubrication	Replace	Descriptions
1	Overall	Paper feed and image conditions	—		●			
2		Appearance	—	●	●			
3	Conveyance section	Paper exit roller	6				●	
4		Paddle/1	1				●	
5		Paddle/2	2				●	
6		Conveyance roller	—	●				
7		Main drive section	—		●	●		
8		Main tray section	—		●	●		
9		Alignment drive section	—		●	●		
10		Paper exit drive section	—		●	●		
11	Staple section	Staple section	—		●	●		

B. Periodical maintenance 2 (fixed parts counter; every 500,000 counts)

No.	Section	Description/part name	Qt.	Clean	Check	Lubrication	Replace	Descriptions
1	Staple section	Stapler unit	—				●	

3.1.6 SD-508

A. Periodical maintenance 1 (total counter; every 100,000 counts)

No.	Section	Description/part name	Qt.	Clean	Check	Lubrication	Replace	Descriptions
1	Overall	Paper feed and image conditions	—		●			
2		Appearance	—	●	●			
3	Conveyance section	Conveyance roller	—	●				
4	Folding section	Folding section	—	●				
5		Folding roller	—	●				
6		Paper exit belt	—	●				
7	Staple section	Staple section	—		●	●		

B. Periodical maintenance 2 (fixed parts counter; every 200,000 counts)

No.	Section	Description/part name	Qt.	Clean	Check	Lubrication	Replace	Descriptions
1	Staple section	Stapler unit	—				●	

3.1.7 PK-516

A. Periodical maintenance 1 (total counter; every 100,000 counts)

No.	Section	Description/part name	Qt.	Clean	Check	Lubrication	Replace	Descriptions
1	Overall	Paper feed and image conditions	—		●			
2		Appearance	—	●	●			
3	Punch section	Punch edge	—	●				
4		Punch scraps box	—	●				
5		Punch scraps full sensor	—	●				

⚠1 3.1.8 JS-602

A. Periodical maintenance 1 (total counter; every 100,000 counts)

No.	Section	Description/part name	Qt.	Clean	Check	Lubrication	Replace	Descriptions
1	Overall	Paper feed and image conditions	—		●			
2		Appearance	—	●	●			
3	Conveyance section	Conveyance roller	—	●				
4	Paper exit section	Exit roller	—	●				

⚠1 3.1.9 PI-505

A. Periodical maintenance 1 (total counter; every 100,000 counts)

No.	Section	Description/part name	Qt.	Clean	Check	Lubrication	Replace	Descriptions
1	Overall	Paper feed and image conditions	—		●			
2		Appearance	—	●	●			
3	Paper feed section	Feed roller	—	●				
4		Separation roller	—	●				
5		Pick-up roller	—	●				
6	Conveyance section	Exit roller	—	●				

B. Periodical maintenance 2 (fixed parts counter; every 100,000 counts)

No.	Section	Description/part name	Qt.	Clean	Check	Lubrication	Replace	Descriptions
1	Paper feed section	Feed roller/Up	—				●	
2		Feed roller/Lw	—				●	
3		Separation roller/Up	—				●	
4		Separation roller/Lw	—				●	

C. Periodical maintenance 3 (fixed parts counter; every 200,000 counts)

No.	Section	Description/part name	Qt.	Clean	Check	Lubrication	Replace	Descriptions
1	Paper feed section	Pick-up roller/Up	—				●	
2		Pick-up roller/Lw	—				●	

D. Periodical maintenance 4 (fixed parts counter; every 600,000 counts)

No.	Section	Description/part name	Qt.	Clean	Check	Lubrication	Replace	Descriptions
1	Paper feed section	Torque limiter/Up	—				●	
2		Torque limiter/Lw	—				●	

3.1.10 FS-527

A. Periodical maintenance 1 (total counter; every 300,000 counts)

No.	Section	Description/part name	Qt.	Clean	Check	Lubrication	Replace	Descriptions
1	Overall	Paper feed and image conditions	—		●			
2		Appearance	—	●	●			
3	Conveyance section	Roller and rolls	—	●				
4		Paddles	—	●				

B. Periodical maintenance 2 (life counter; every 800,000 counts)

No.	Section	Description/part name	Qt.	Clean	Check	Lubrication	Replace	Descriptions
1	Conveyance section	Upper paddle	2				●	
2		Lower paddle	9				●	

3.2 Periodical replacement parts list

- To ensure that the machine produces good copies and to extend its service life, it is recommended that the maintenance jobs described in this schedule be carried out as instructed.
- ⚠1 Replace with reference to the numeric values displayed on the totalcounter, the life counter, the fixed parts counter or the messages displayed on the control panel.
- Maintenance conditions are based on the case of A4 or 8 1/2 x 11, standard mode and low power mode OFF.
  (Consumables which adopt field standard yield are excluded.)

		Color	B/W
* Standard mode	bizhub C652	5 pages per job	7 pages per job
	bizhub C552	5 pages per job	6 pages per job
⚠1	bizhub C452	5 pages per job	5 pages per job

3.2.1 Main body

Classification	Parts name	Parts No.	Qt.	Replacing cycle	Descriptions	Ref. page
ADF	Pick-up roller	9J07 3301 ##	2	200,000 *1	*3	*4
	Feed roller	4030 3005 ##	1	200,000 *1		
	Separation roller	9J07 3409 ##	1	200,000 *1		
Tray 1	Feed roller	A00J 5636 ##	1	300,000 *1	*3	P.53
	Separation roller assy	A0P0 R740 ##	1	300,000 *1		P.56
	Pick-up roller	A00J 5636 ##	1	300,000 *1		P.53
Tray 2	Feed roller	A00J 5636 ##	1	300,000 *1	*3	P.57
	Separation roller assy	A0P0 R740 ##	1	300,000 *1		P.60
	Pick-up roller	A00J 5636 ##	1	300,000 *1		P.57
Tray 3	Feed roller	A00J 5636 ##	1	300,000 *1	*3	P.61
	Separation roller	A00J 5636 ##	1	300,000 *1		P.62
	Pick-up roller	A00J 5636 ##	1	300,000 *1		P.61
Tray 4	Feed roller	A00J 5636 ##	1	300,000 *1	*3	P.64
	Separation roller	A00J 5636 ##	1	300,000 *1		P.65
	Pick-up roller	A00J 5636 ##	1	300,000 *1		P.64
Manual bypass tray	Feed roller	A00J 5636 ##	1	300,000 *1	*3	P.67
	Separation roller assy	A0P0 R741 ##	1	300,000 *1		P.69
	Pick-up roller	A00J 5636 ##	1	300,000 *1		P.67
Conveyance section	Transfer roller unit	A0P0 R719 ##	1	570,000 *2		P.50
Fusing section	Fusing unit	A0P0 R733 ##	1	570,000 *2	*5	P.71
		A0P0 R734 ##			*6	

Classification	Parts name	Parts No.	Qt.	Replacing cycle	Descriptions	Ref. page
Processing section	Imaging unit/ Y,M,C	-	1	C652: 135,000 *2 C552/C452: 120,000 *2	*7	P.33
	Drum unit/ K	-	1	285,000 *2	*8	P.36
	Developing unit/ K	-	1	1,140,000 *2		P.40
	Ozone filter	A00J R731 ##	1	285,000 *2		P.31
	Toner cartridge/ Y,M,C	-	1	30,000 *2	*7	P.44
	Toner cartridge/ K	-	1	45,000 *2	*7	
	Toner filter	A0P0 R701 ##	1	285,000 (Black)/ 120,000 (Color) *2, *9		P.31
Image transfer section	Transfer belt unit	A0P0 R700 ##	1	570,000 *2		P.46
	Waste toner box	A0XPWY1	1	(48,000) *2	*7, *10	P.51

*1: Actual durable cycle (life counter value)
*2: Field standard yield
See P.9
*3: Replace those three parts at the same time.
*4: See the DF-618/SP501 service manual.
*5: 110 V to 120 V areas only.
*6: 220-240 V areas only.
*7: The parts can be replaced either by user or service engineer.
*8: The ozone filter and the toner filter are furnished with the drum unit/K so that all of them are replaced at same time.
*9: When either black or color counter arrived at the replacing cycle.
*10: A waste toner full condition is detected with detecting the actual waste toner emissions.

3.2.2 Option

Classification	Parts name	Parts No.	Qt.	Replacing cycle	Descriptions	Ref. Page
LU-204	Pick-up roller	A00J 5636 ##	1	300,000 *1	*2	*3
	Feed roller	A00J 5636 ##	1	300,000 *1		
	Separation roller	A00J 5636 ##	1	300,000 *1		
LU-301	Pick-up roller	A00J 5636 ##	1	300,000 *1	*2	
	Feed roller	A00J 5636 ##	1	300,000 *1		
	Separation roller	A00J 5636 ##	1	300,000 *1		
⚠1 ZU-606	Punch scraps conveyance motor	A111A928	1	1,000,000 *4		
	Punch clutch	13NKK0010	1	1,000,000 *4		
FS-526	Paper exit roller	122H 4825 #	6	100,000 *1		
	Stapler unit	A07P 7901 ##	1	500,000 *4		
	Paddle/1	A11P R745 ##	1	100,000 *1		
	Paddle/2	A11P R746 ##	2	100,000 *1		
SD-508	Stapler unit	20AK 4241 ##	1	200,000 *4		

Classification	Parts name	Parts No.	Qt.	Replacing cycle	Descrip tions	Ref. Page
PI-505	Feed roller /Up	13QN-446	1	100,000 *4		
	Feed roller /Lw	13QN-446	1	100,000 *4		
	Separation roller /Up	13QN-443	1	100,000 *4		
	Separation roller /Lw	13QN-443	1	100,000 *4		
	Pick-up roller /Up	50BA-574	1	200,000 *4		*3
	Pick-up roller /Lw	50BA-574	1	200,000 *4		
	Torque limiter /Up	13QN4073	1	600,000 *4		
	Torque limiter /Lw	13QN4073	1	600,000 *4		
FS-527	Upper paddle	A0HR 7317 ##	2	800,000 *5		
	Lower paddle	A0HR 7348 ##	9	800,000 *5		

*1: Actual durable cycle (life counter value)
*2: Replace those three parts at the same time.
*3: See each option service manual.
*4: Fixed counter value
*5: Total conter value

3.3 Periodical cleaning parts list

- Clean with reference to the numeric values displayed on the totalcounter, the life counter or the messages displayed on the control panel.

3.3.1 Main body

Classification	Parts name	Actual cleaning cycle	Descrip-tions	Ref.Page
ADF	Pick-up roller	50,000		
	Feed roller	50,000		
	Separation roller	50,000		
	Rollers and rolls	50,000		*1
	Scanning guide	50,000		
	Reflective sensor section	50,000		
Conveyance section	Timing roller	100,000		P.71
	Paper dust remover	100,000		P.70
Duplex section	Duplex transport roller	100,000		P.73
Processing section	Electrostatic charger wire	100,000		P.40
Image transfer section	Area around the waste toner collecting port	100,000		P.51
Fusing section	IH coil unit	When fusing unit is replaced (600,000)		P.73

*1: See DF-618/SP-501 service manual.

3.3.2 Option

	Classification	Parts name	Actual cleaning cycle *1	Descrip-tions	Ref.Page
1	ZU-606	Punch edge	100,000 *1		
		Entrance guide plate	100,000 *1		
		Conveyance guide plate	100,000 *1		
		Registration roller	100,000 *1		
		Conveyance roller	100,000 *1		
		Exit guide plate	100,000 *1		
		Folding roller	100,000 *1		
		Folding guide plate	100,000 *1		
		Punch waste box	100,000 *1		
		Appearance	100,000 *1		
	FS-526	Conveyance roller	100,000 *1		
	SD-508	Conveyance roller	100,000 *1		
		Folding section	100,000 *1		
		Folding roller	100,000 *1		*2
		Exit belt	100,000 *1		
	PK-516	Punch edge	100,000 *1		
		Punch scraps box	100,000 *1		
		Punch scraps full sensor	100,000 *1		
1	JS-602	Conveyance roller	100,000 *1		
		Exit roller	100,000 *1		
1	PI-505	Feed roller	100,000 *1		
		Separation roller	100,000 *1		
		Pick-up roller	100,000 *1		
		Conveyance roller	100,000 *1		
1	FS-527	Roller and rolls	300,000 *1		
		Upper paddle	300,000 *1		
		Lower paddle	300,000 *1		

*1: Total counter value
*2: See each option service manual.

3.4 CMS corresponding parts

3.4.1 CMS corresponding parts

- "CMS" stands for "customer maintenance support," and this is applicable when the user wants to change parts by himself.

3.4.2 CMS corresponding parts list

No	Section	Corresponding parts	Cycle	Clean	Replace	Ref. page
1	Processing section	Drum unit/K	285,000		●	P.36
2		Ozone filter	285,000		●	P.31
3		Toner filter	285,000 (Black)/ 120,000 (Color)		●	P.31

3.4.3 Replacing CMS corresponding parts as a set

- There are three types of parts set which correspond to CMS. When conducting CMS, replace all three parts at the same time.

3.5 Concept of parts life

3.5.1 Life value of consumables and parts

- The life counter value of each consumables and parts is available from [Service Mode] → [Counter] → [Life].
- Life specification value means an actual life terminated when prints are made under the conditions as defined in the next section, “Conditions for life specifications values.” The actual life may vary greatly depending on how the machine has been used and other factors.
See P.29
- “M” refers to the rotation time of each unit.

	Description	Life value (Specification value)	Max. life value
Waste toner box	The waste toner full sensor detects the amount of toner accumulated in the waste toner box and sends a signal that determines the end of the waste toner box life.	48,000 prints *1,2	–
Fusing unit	When the number of printed pages *4 reaches the set life value shown on the right, the end of unit life is detected. Rotation time for the fusing unit is also counted for control’s sake, but not used for detecting life.	600,000 counts	615,000 counts *3
Transfer roller unit	When the number of printed pages *4 reaches the set life value shown on the right, the end of unit life is detected.	600,000 counts	615,000 counts *3 (printable)
Transfer belt unit	Number of prints *4 and rotation time of the transfer belt are counted, and detected when one of those two reaches to the life value shown on the right.	600,000 counts/ 32,638 M	615,000 counts *3/ 33,333 M *3
Ozone filter	Rotation time of the black photo conductor is counted, and detected when it reaches to the set life value shown on the right. * The PC drum rotation is calculated based on the distance the PC drum has run.	10,302 M	10,750 M (printable)
Toner filter	Number of prints *4 for color printing and black printing are counted, and detected when one of those two reaches to the set life value shown on the right. For the life counter, value based on the calculation below is displayed. Value (1) or (2) below whichever is larger than the other one (1) Number of prints for black printing (2) Number of prints for color printing ÷ 150,000 x 300,000	Color: 150,000 counts Bk: 300,000 counts	Color: 160,000 counts Bk: 315,000 counts (printable)
Imaging unit/Y,M,C	Rotation time of the PC drum and number of prints *4 are counted, and detected when one of those values reaches to the set life value shown on the right. * The PC drum rotation is calculated based on the distance the PC drum has run.	150,000 counts/ 5,180 M	160,000 counts *3/ 5,525 M *3

	Description	Life value (Specification value)	Max. life value
Drum unit/K	Rotation time of the PC drum is counted, and detected when it reaches to the set life value shown on the right. * The PC drum rotation is calculated based on the distance the PC drum has run.	10,302 M	10,750 M *3
Developing unit/K	When the number of printed pages *4 reaches the set life value shown on the right, the end of unit life is detected.	1,200,000 counts	1,215,000 counts *3

*1: A waste toner full condition is detected with detecting the actual waste toner emissions.
*2: Once the toner-full is detected, it has to be replaced with the new waste toner box in order to reset.
*3: The initiation of any new print cycle is inhibited when the max. life value is reached.
*4: For counting with number of prints, the paper size in the sub scan direction is accumulated and counts one when it reaches to 216.0 mm. For the paper with sub scan size of less than 216.0mm, it is accumulated with the size of 216.0 mm.

3.5.2 Conditions for life specifications values

- The life specification values represent the number of copies made or figures equivalent to it when given conditions (see the table given below) are met. They can be more or less depending on the machine operating conditions of each individual user.

Item			Description
Job type	bizhub C652		Black : Making 7 copies per job Color : Making 5 copies per job
	bizhub C552		Black : Making 6 copies per job Color : Making 5 copies per job
1	bizhub C452		Black : Making 5 copies per job Color : Making 5 copies per job
Paper size			A4 / 8 $^{1}/_{2}$ x 11
Color ratio			Black to Color = 4:1
PV/M	bizhub C652	Average	Bk: 16,400 / Color: 5,500 (US), Bk: 22,200 / Color: 7,400 (EU)
		Maximum	Bk: 187,000 / Color: 63,000
	bizhub C552	Average	Bk: 11,800 / Color: 3,900 (US), Bk: 15,900 / Color: 5,300 (EU)
		Maximum	Bk: 150,000 / Color: 50,000
1	bizhub C452	Average	Bk: 7,900 / Color: 2,600 (US), Bk: 10,700 / Color: 3,600 (EU)
		Maximum	Bk: 112,000 / Color: 38,000
Original density			B/W = 5 % for each color, 5 % for black
No. of operating days per month			20 days (main power switch turned ON and OFF 20 times per month)

3.5.3 Control causing inhibited printing for one part when an inhibited-printing event occurs in another part

- In order to reduce the maintenance call times: when printing prohibiting is reached for any of the following parts, make printing prohibited also for other parts whose life value is reached, and replace those parts at the same time.

A. Object parts

- Object parts are divided into two groups. Each group has its own control method. Two groups are listed below.

Group A	• Fusing unit, transfer belt unit, developing unit/K
Group B	• imaging unit/Y,M,C, drum unit/K

B. Control method

When a part from group A or B is prohibited from printing:

- A part from group A which reached its life is considered to be “printing inhibited” only when the difference between the life counter value and the maximum life value is for 10,000 prints or under.
- A parts from group B which reached its life is considered to be “printing inhibited” regardless of the difference with maximum life value.

4. PERIODICAL MAINTENANCE PROCEDURE

NOTE

- **The alcohol described in the cleaning procedure of maintenance represents the isopropyl alcohol.**

4.1 Housing section

4.1.1 Replacing the ozone filter

A. Periodically replaced parts/cycle

- Ozone filter: Every 285,000 counts

B. Procedure

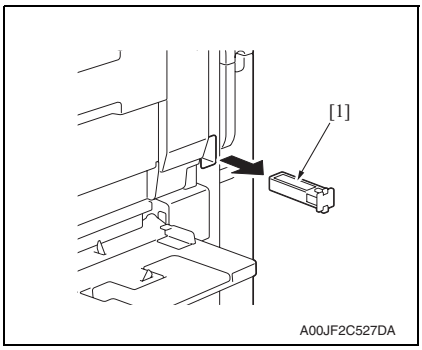

1. Remove the ozone filter [1], and then install the new ozone filter.

2. Select [Service Mode] → [Counter] → [Life] and clear the count of [Ozone Filter].
See P.544

4.1.2 Replacing the toner filter

A. Periodically replaced parts/cycle

- Toner filter: Every 285,000 (black)/120,000 (color) counts

B. Procedure

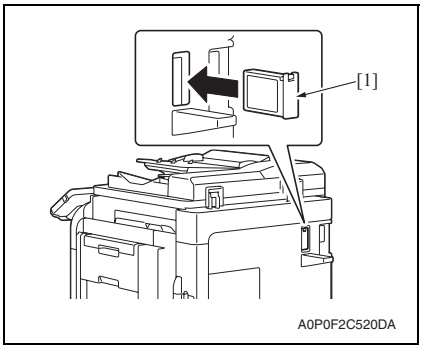

1. Remove the toner filter [1], and then install the new color toner filter.

2. Select [Service Mode] → [Counter] → [Life] and clear the count of [Toner Filter].
See P.544

4.2 Write section

4.2.1 Cleaning of the PH window Y/M/C/K

A. Periodically cleaning parts/cycle

- PH window Y,M,C,K: when toner cartridge is replaced

B. Procedure

1. Open the lower front door.

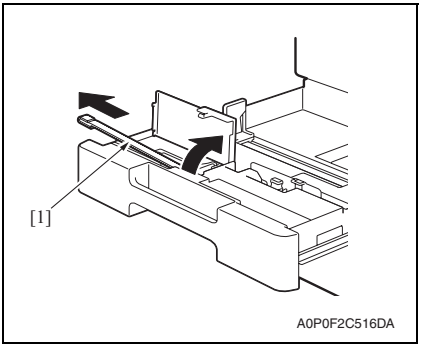

2. Pull out tray 2 and remove the cleaning tool [1] from tray 2.

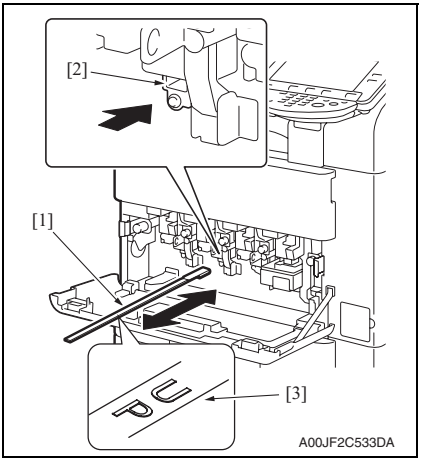

3. Insert the cleaning tool [1] into the print head cleaning opening [2], pull it out, and then repeat this back-and-forth movement two or three times.

NOTE

- **When using the cleaning tool, put the side with "UP" stamping [3] face up.**
- **Clean the PH window of each CMYK color.**
- **When cleaning the PH window of K color, release the lock lever for the imaging unit.**

4.3 Imaging unit section

4.3.1 Replacing the imaging unit/Y,M,C

A. Periodically replaced parts/cycle

- Imaging unit/Y,M,C: Every 120,000 counts

B. Removal procedure

1. Open the lower front door.
2. Remove the waste toner box.
See P.51

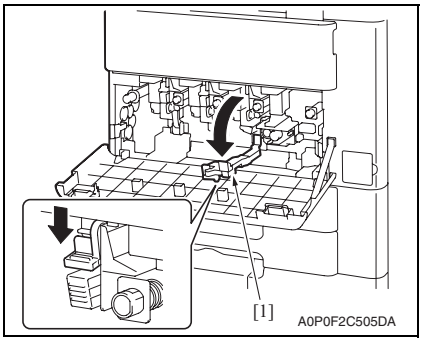

3. Release the lock lever [1] for the imaging unit.

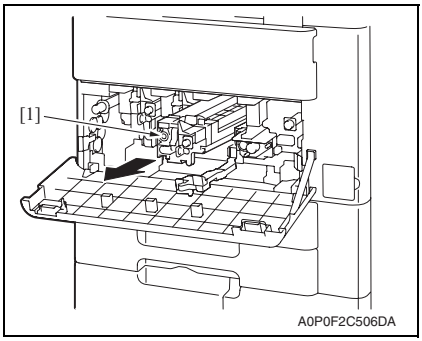

4. Remove the imaging unit [1].

C. Reinstall procedure

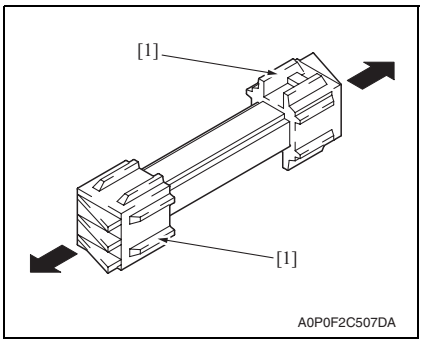

1. Remove the imaging unit from its packaging.
2. Remove the packing materials [1].

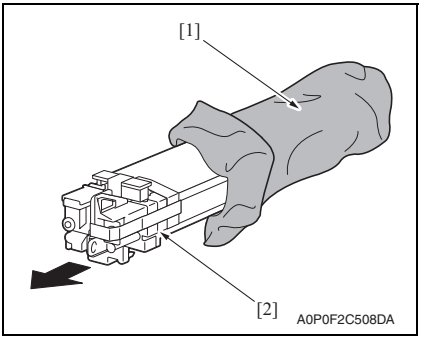

3. Remove the imaging unit [2] from the black protective bag [1].

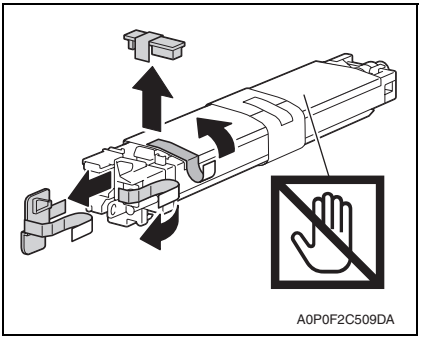

4. Remove the packing material and securing material.

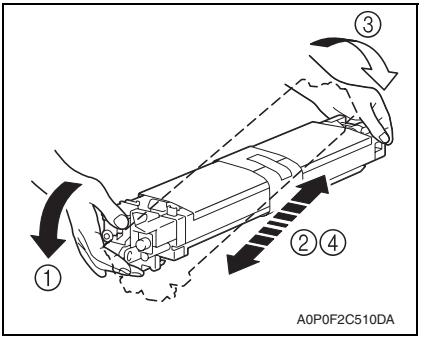

5. Tilt the imaging unit to the direction ①, and lightly shake it twice (②). Tilt it to the direction ③ and shake it twice (④).

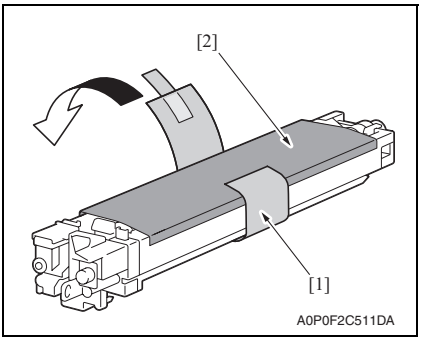

6. Peel off the tape [1], and remove the protective sheet [2] for the PC drum.

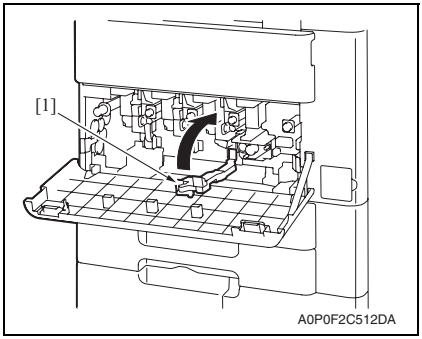

7. Insert the new imaging unit into the machine, and close the securing lever [1] for the imaging unit.

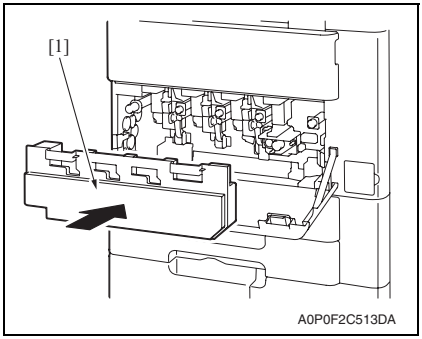

8. Install the waste toner box [1], and close the lower front door.

4.3.2 Replacing the drum unit/K

A. Periodically replaced parts/cycle

- Drum unit/K: Every 285,000 counts

B. Removal procedure

NOTE

- **In this procedure, the state in which the drum unit/K and the developing unit/K are assembled is called "imaging unit/K."**

1. Open the lower front door.
2. Remove the waste toner box.
See P.51

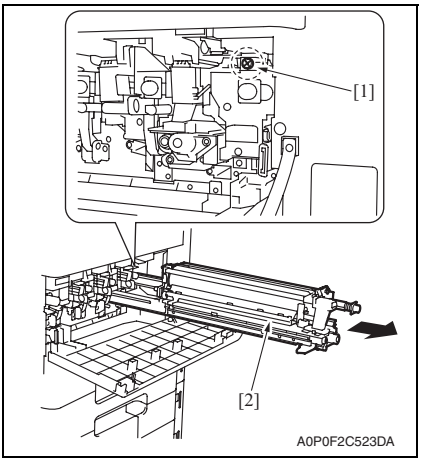

3. Loosen the shoulder screw [1], and pull out the drum unit/K [2].

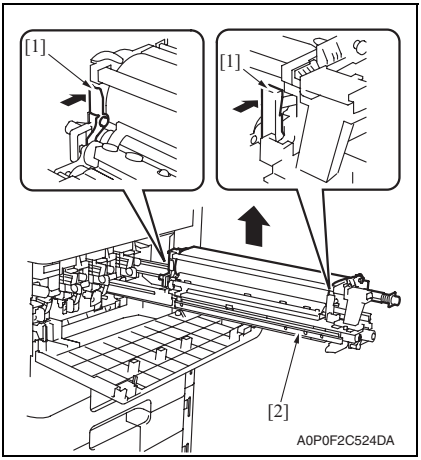

4. Hold the fixed levers [1] for the drum unit/K at two positions, and remove the drum unit/K [2] while loosening the fixed lever.

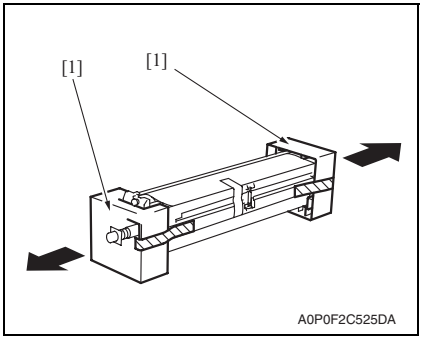

5. Remove the new drum unit/K from the black protective bag.
6. Remove caps [1] at the front and the back of the drum unit/K.

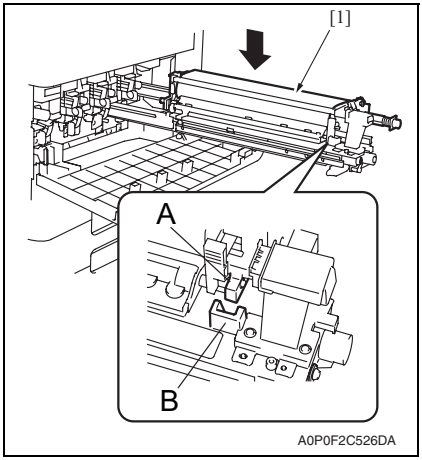

7. Put the drum unit/K [1] on the developing unit/K.

NOTE

- **Do not tilt the drum unit/K when putting it on the developing unit/K. (Keep the drum unit/K level.)**
- **Position the drum unit/K so that part A of the drum unit/K is inserted into part B of the developing unit/K.**

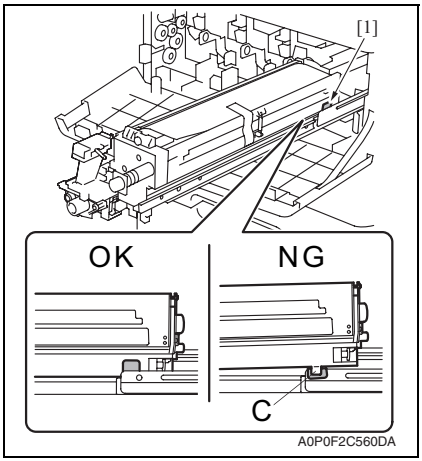

NOTE

- **Position the drum unit/K so that part C of the drum unit/K is inside the film [1] located on the main body rail. (Check that Part C is not on the top of the rail.)**

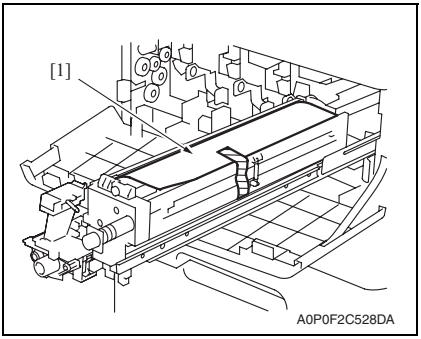

8. Remove the protective sheet [1] for the PC drum.

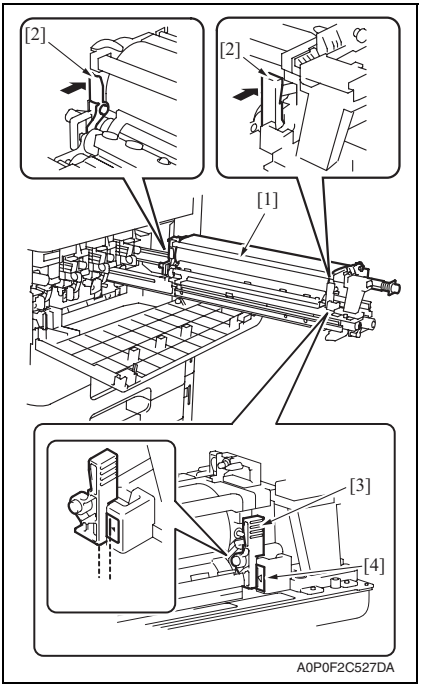

9. Secure the drum unit/K [1] to the developing unit/K with the two levers [2].

NOTE

- **Push the front and back levers in the direction of the arrow at a time to secure the drum unit/K.**
- **Make sure the drum unit/K is securely fixed with two levers.**
- **Check that the front lever [3] of the drum unit/K is parallel to the vertical line marked on the label [4] on the developing unit/K.**

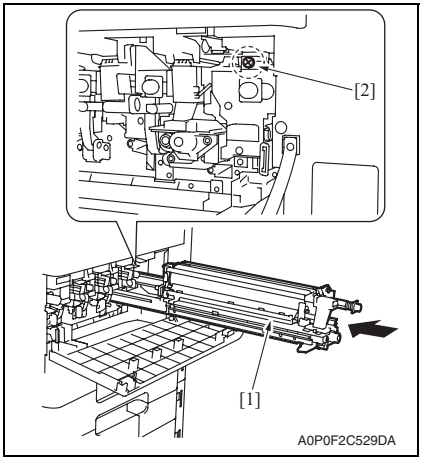

10. Insert the imaging unit/K [1] into the machine, and tighten the shoulder screw [2] to secure the drum unit/K.

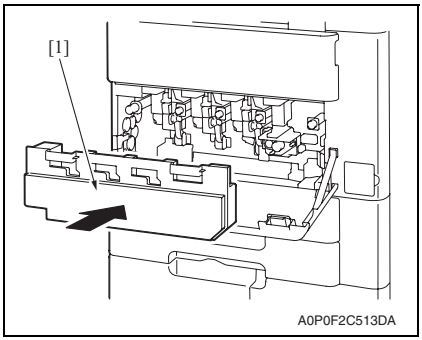

11. Remount the waste toner box [1], and close the lower front door.

12. Replace the ozone filter furnished with the drum unit/K.
See P.31

13. Replace the toner filter furnished with the drum unit/K.
See P.31

4.4 Charging section

4.4.1 Cleaning of the electrostatic charger wire/Y,M,C

A. Periodically cleaning parts/cycle

- Electrostatic charger wire/Y,M,C: Every 100,000 counts

B. Procedure

1. Open the lower front door.

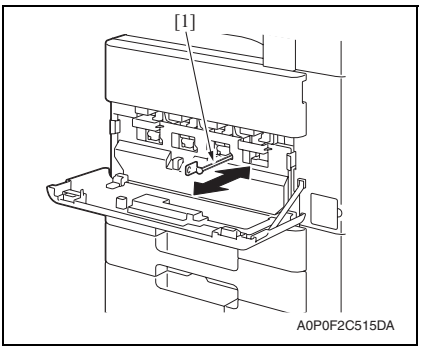

2. Slowly pull out the charger-cleaning tool [1] as far as possible.
Next, slowly push in the charger-cleaning tool as far as possible.
Repeat the above operations three times.

NOTE

- **Move the charger-cleaning tool slowly all the way to the end of either way.**

4.5 Developing section

4.5.1 Replacing the developing unit/K

A. Periodically replaced parts/cycle

- Developing unit/K: Every 1,140,000 counts

B. Procedure

1. Remove the drum unit/K.
See P.36

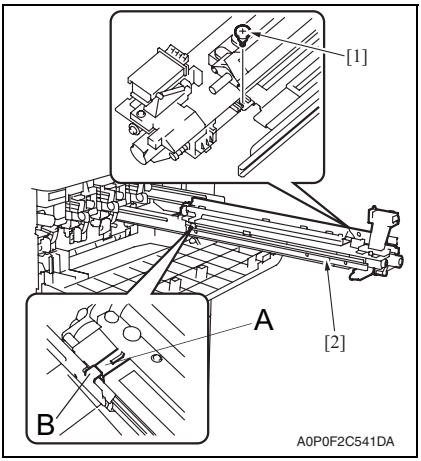

2. Remove the shoulder screw [1].
3. Set A of the developing unit/K to meet B of the rail to remove the developing unit/K [2].

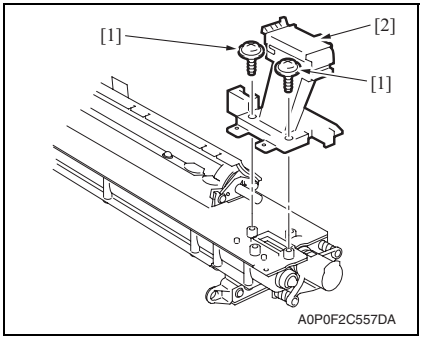

4. Remove two screws [1], and remove the toner supply duct [2].

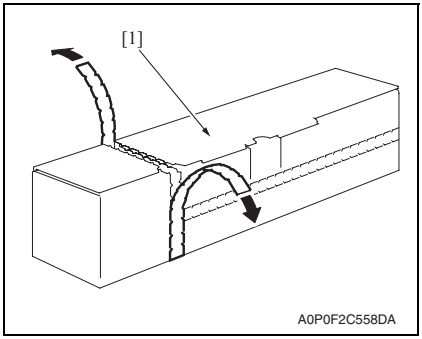

5. Open the package [1] of the new developing unit/K from the part shown on the left.

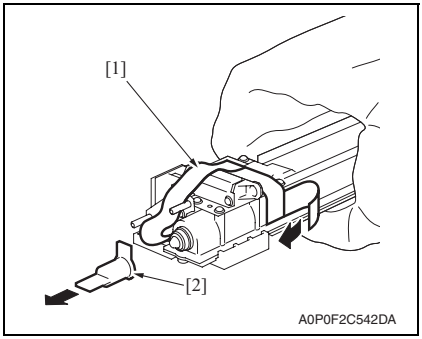

6. Place the new developing unit/K upside down together with its package.

7. Remove the tape [1] and the mounting member [2] for the new developing unit/K.

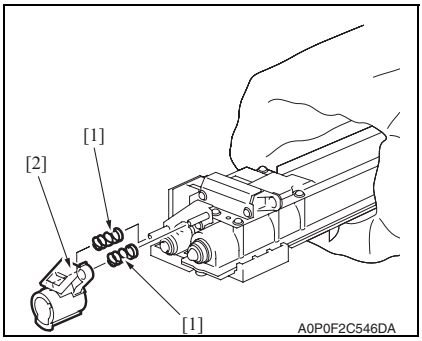

8. Set two springs [1] for mounting and the shutter [2] included to the new developing unit/K.

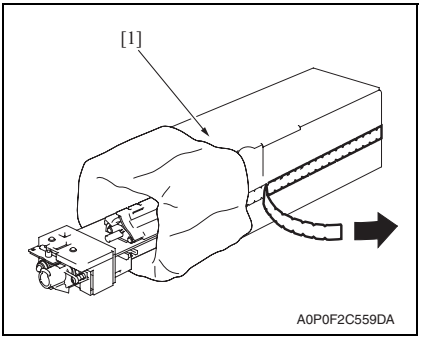

9. Place the new developing unit/K upside down together with its package.

10. Open the package [1] of the new developing unit/K from the part shown on the left, and take out the developing unit/K.

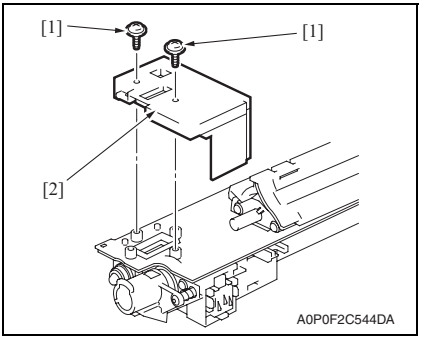

11. Remove two screws [1], and remove the cover [2].

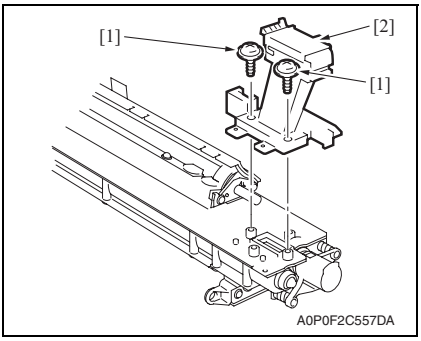

12. Mount the toner supply duct [2] removed in step 4, with two screws [1] to the new developing unit/K.

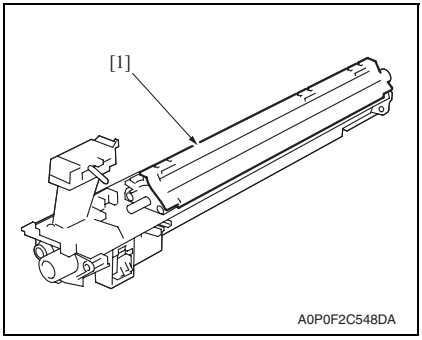

13. Remove the protective sheet [1].

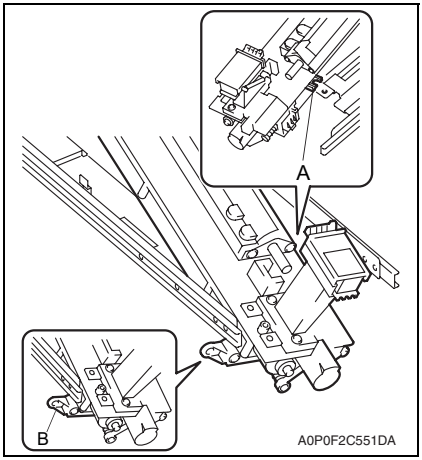

14. While aligning part A of the developing unit/K with the screw hole on the rail, pass part B of the developing unit/K under the rail.

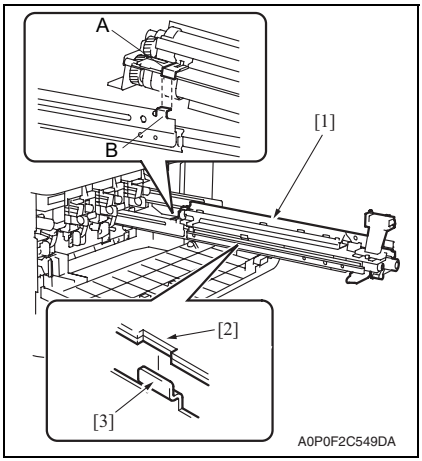

15. Align part A of the developing unit with part B of the rail and place the developing unit/k [1] on the rail of the machine.

NOTE

- **Make sure that the positioning metal bracket [3] of the rail fits in the cutout [2] in the developing unit/K.**

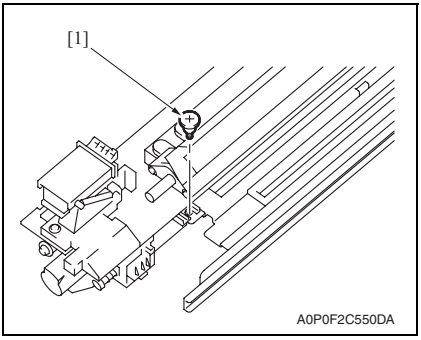

16. Fix the developing unit/K to the rail using the shoulder screw [1].

17. Remount the drum unit/K.
See P.36

4.6 Toner supply section

4.6.1 Replacing the toner cartridge

NOTE

- **Although the procedure shown below is for the replacement of the toner cartridge/Y, use the same procedure to replace other toner cartridges.**

A. Periodically replaced parts/cycle

- Toner cartridge/Y,M,C: Every 30,000 counts
- Toner cartridge/K: Every 45,000 counts

B. Removal procedure

1. Open the upper front door.

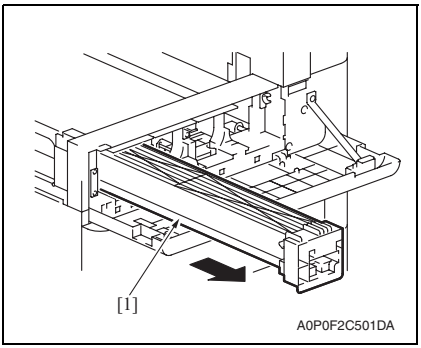

2. Pull out the empty toner cartridge [1].

C. Reinstall procedure

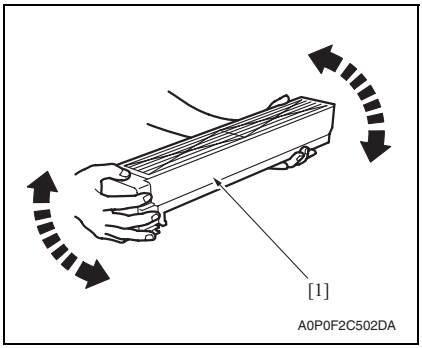

1. Remove the new toner cartridge [1] from its packaging, and then shake the cartridge up and down 5 to 10 times.

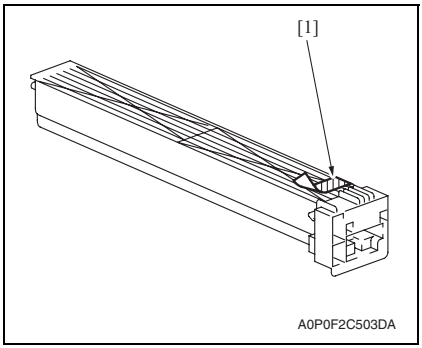

2. Remove the protective tape [1].

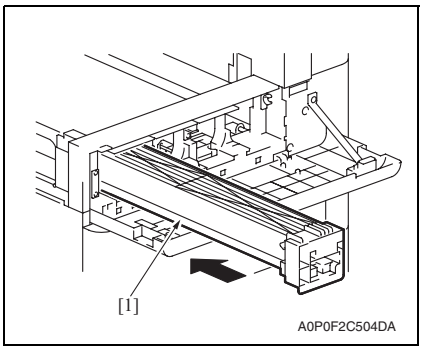

3. Align the toner cartridge [1] with the slots in the cartridge compartment, and then insert the cartridge.
Close the upper front door.

4. Clean the electrostatic charger wire.
See P.40

4.7 1st transfer section

4.7.1 Replacing the transfer belt unit

A. Periodically replaced parts/cycle

- Transfer belt unit: Every 570,000 counts

B. Procedure

1. Open the upper right door.

A00JF2C046DA

2. Remove the screw [1] and the upper right door stopper.

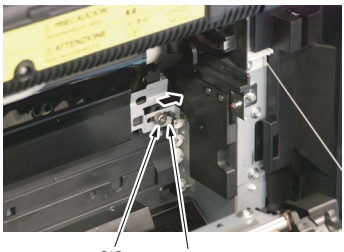

A00JF2C047DA

3. Loosen the shoulder screw [1] and slide the image transfer entrance guide stopper [2] towards the back of the main body.

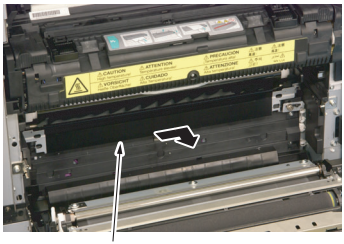

A00JF2C048DA

4. Slide the image transfer entrance guide [1] towards the back of the main body and remove it.

NOTE

- **Slide the image transfer entrance guide [1] towards the back of the main body and remove it.**

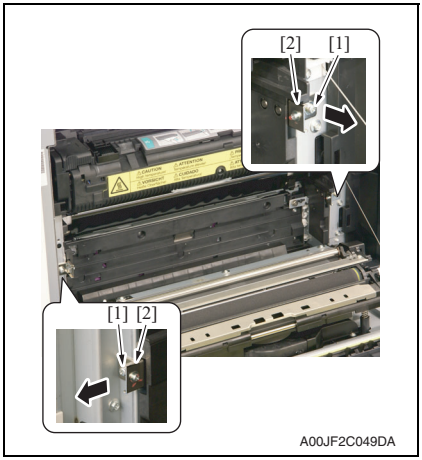

5. Remove two screws [1] and pull the two transfer belt locks [2] towards the right of the main body to unlock the transfer belt.

NOTE

- **Remove two screws [1] and pull the two transfer belt locks [2] towards the right of the main body to unlock the transfer belt.**
  When mounting the transfer belt unit, also make sure the transfer belt is completely unlocked.

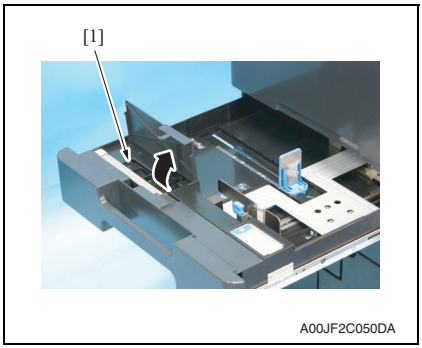

6. Remove the rail [1] that aids in mounting the transfer belt unit from the tray 1.

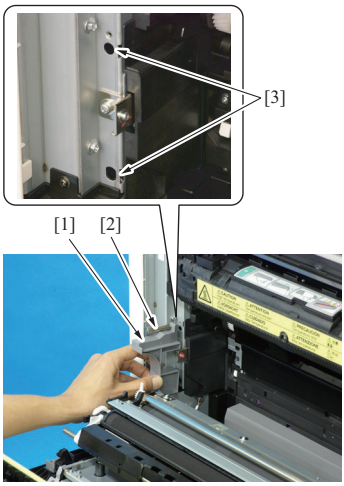

A0P0F2C005DA

7. Install the rail [1] on the main body and secure it with the shoulder screw [2].

NOTE

- **Make sure that the protrusion (at two places) on the rail is inserted into the dowel holes [3] (at two places) on the main body.**

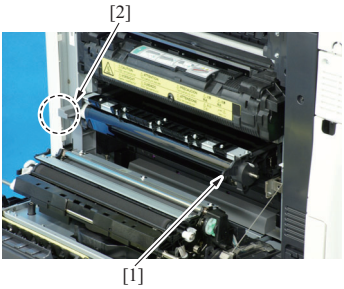

A0P0F2C006DA

8. Grip the part [1] of the transfer belt unit and slide it out until it touches the stopper [2] of the rail.

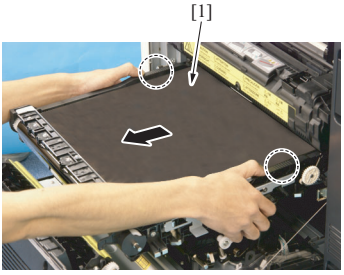

A00JF2C053DA

9. Change the way of holding the transfer belt unit [1] as shown in the picture and remove it.

NOTE

- **Do not touch the surface of the transfer belt unit.**
- **Cover the transfer belt unit with something such shade cloth to protect its surface from dust or foreign matter.**

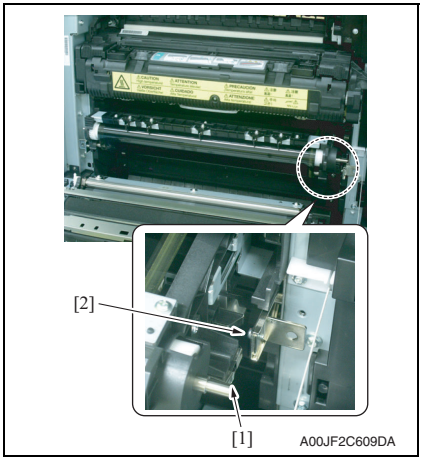

NOTE

- **When removing/reinstalling the transfer belt unit, be sure not to allow the contact [1] to hit the screw [2] of the transfer belt unit lock.**

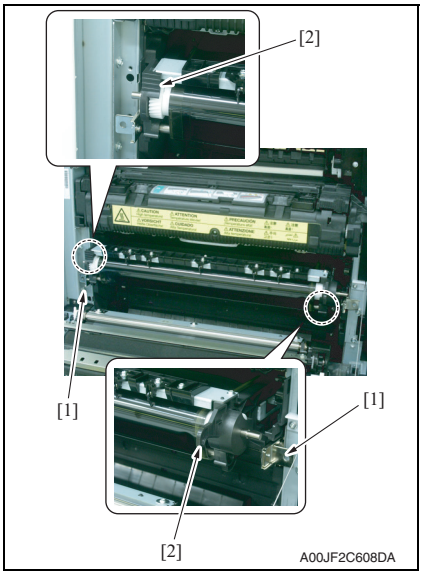

10. To reinstall, reverse the order of removal.

NOTE

- **Insert the transfer belt unit with care not to allow its docking gear to be damaged by hitting it against the rail or associated part.**
- **Before reinstalling the transfer belt unit, make sure that the two transfer belt unit locks [1] are completely unlocked. Insert the transfer belt unit by pressing the area [2] (two places) shown in the illustration on the left until the transfer belt unit is fitted into its place.**

11. Select [Service Mode] → [Counter/Data] → [Life] → [New Release] and carry out new release for the transfer belt unit.
See P.544

12. Select [Service Mode] → [Imaging Process Adjustment] → [Gradation Adjust] and carry out gradation adjust.
See P.482

4.8 2nd transfer/separation section

4.8.1 Replacing the transfer roller unit

A. Periodically replaced parts/cycle

- Transfer roller unit: Every 570,000 counts

B. Removal procedure

1. Open the upper right door.

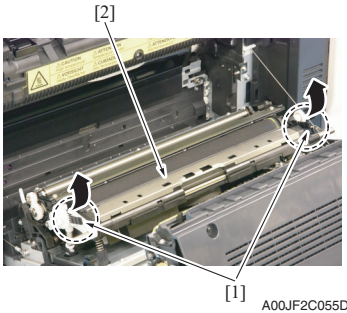

2. Unlock the lock levers [1] of the transfer roller unit (at two places).
3. Holding onto the lock levers [1] (at two places), remove the transfer roller unit [2].

C. Reinstall procedure

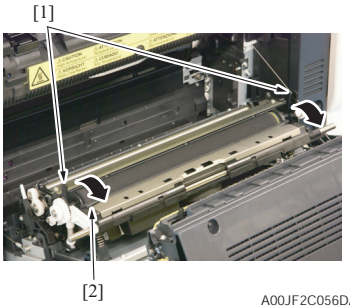

1. Holding onto the lock levers [1] (at two places), mount the new transfer roller unit [2].
2. Lock the lock levers [1] (at two places).

NOTE

- **Make sure that the levers are locked in position both at front and rear.**

3. Select [Service Mode] → [Counter] → [Life] and clear the count of [Transfer Roller Unit]. See P.544

4.9 Toner collection section

4.9.1 Cleaning of the area around the waste toner collecting port

A. Periodically cleaning parts/cycle

- Area around the waste toner collecting port: Every 100,000 counts

B. Procedure

1. Open the lower front door.
2. Remove the waste toner box.
See P.51

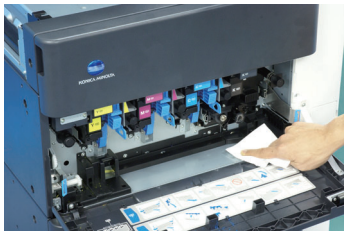

A0P0F2C003DA

3. Wipe the areas around the waste toner collecting port clean of spilled toner and dirt using a cleaning pad dampened with water or alcohol.

4.9.2 Replacing the waste toner box

A. Periodically replaced parts/cycle

- Waste toner box: Every 48,000 counts

B. Removal procedure

1. Open the lower front door.

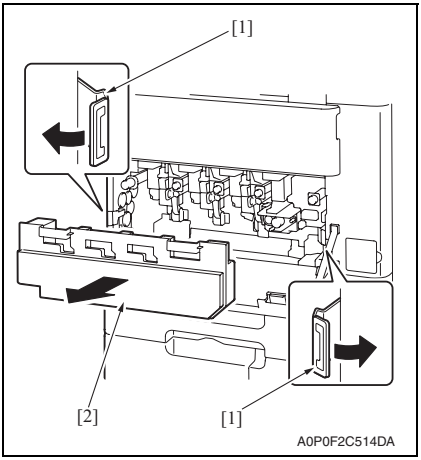

A0P0F2C514DA

2. Release the securing levers [1] for the waste toner box, and then remove the waste toner box [2].

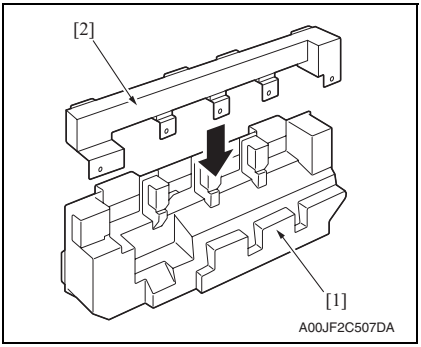

3. Mount the enclosed cap [2] included in the new waste toner box to the waste toner box [1] that has been removed at the step 2.

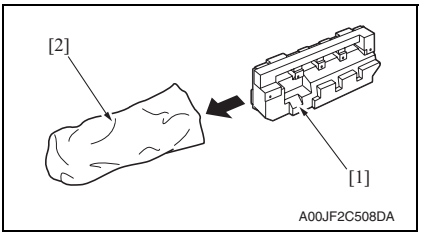

4. Place the waste toner box [1] with the cap attached into the plastic bag [2].

5. Clean the surface around the waste toner collecting port.
See P.51

C. Reinstall procedure

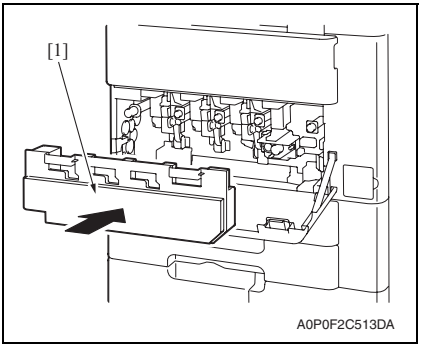

1. Install the new waste toner box [1], and close the lower front door.

4.10 Paper feed section

4.10.1 Replacing the tray 1 feed roller/tray 1 pick-up roller

A. Periodically replaced parts/cycle

- Tray 1 feed roller: Every 300,000 counts
- Tray 1 pick-up roller: Every 300,000 counts

B. Procedure

1. Slide out the tray 1.
2. Remove the rear right cover.
See P.91
3. Remove the tray 2 paper feed unit.
See the replacement procedures 1 to 8 in “Tray 2 feed roller/tray 2 pick-up roller.”
See P.57

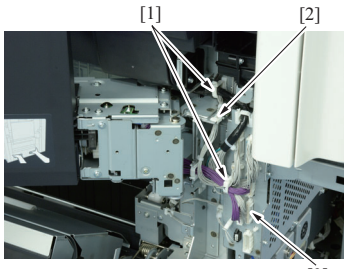

4. Remove the harness from two wire saddles [1] and the edge cover [2], and disconnect the connector [3].

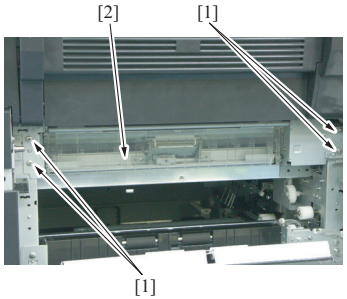

5. Remove four screws [1], take out the tray1 paper feed unit [2] with the upper right door open.

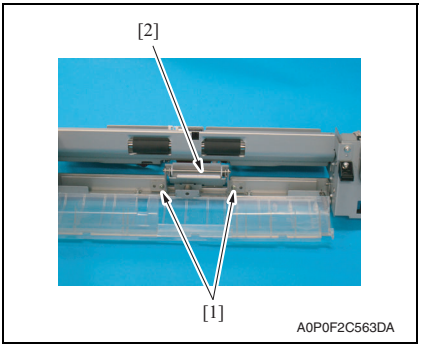

6. Remove two screws [1], and remove the tray 1 separation roller installation plate assy [2].

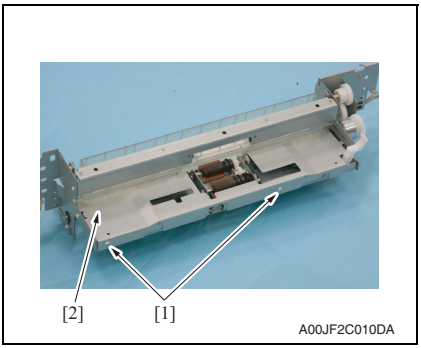

7. Remove two screws [1], and remove the tray 1 feed roller cover [2].

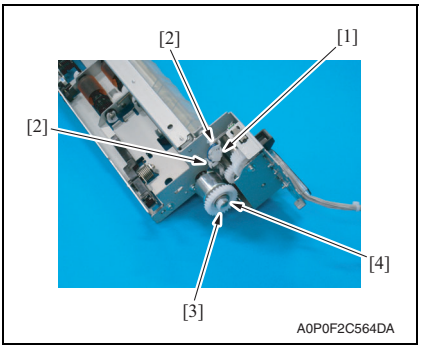

8. Disconnect the connector [1], and remove the harness from two wire saddles [2].

9. Remove the C-clip [3], and remove the tray 1 paper feed clutch [4].

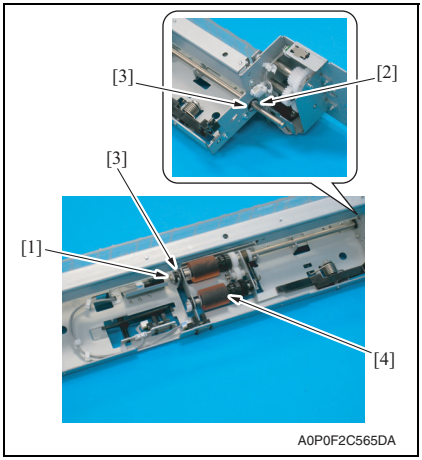

10. Remove the C-clip [1], C-ring [2] and two bearings [3], and remove the feed roller/pick-up roller assy [4].

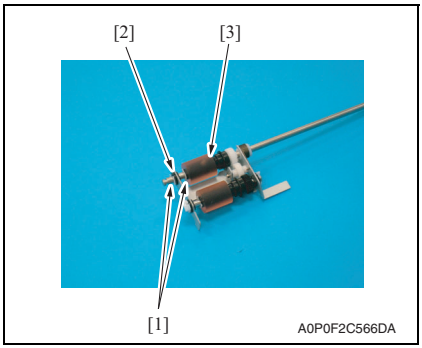

11. Remove two C-rings [1] and bearing [2], and remove the tray 1 feed roller [3].

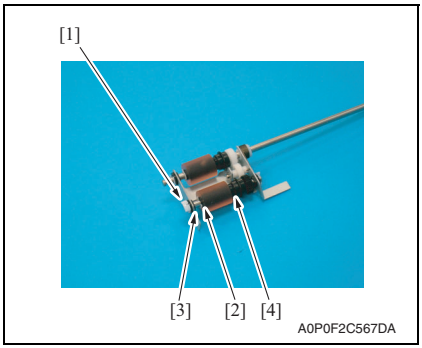

12. Remove the C-clip [1], C-ring [2] and bearing [3], and remove the tray 1 pick-up roller [4].

13. To reinstall, reverse the order of removal.

14. Remove the tray 1 separation roller assy.
See P.56

15. Select [Service Mode] → [Counter] → [Life] and clear the count of [1st.].
See P.544

4.10.2 Replacing the tray 1 separation roller assy

A. Periodically replaced parts/cycle

- Tray 1 separation roller assy: Every 300,000 counts

B. Procedure

1. Slide out the tray 1.
2. Remove the manual bypass tray rear cover.
See P.92
3. Open the manual bypass tray door.

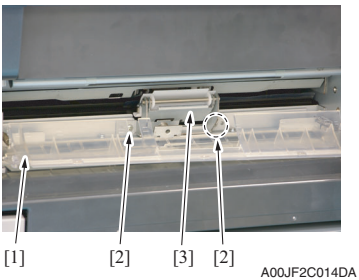

4. Opening the jam clearing cover [1], remove two screws [2] and take out the tray1 separation roller assy [3].

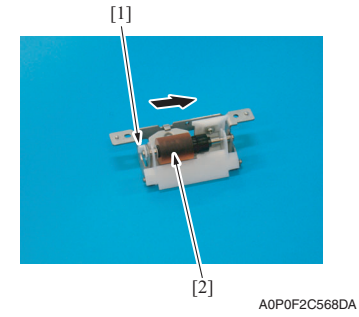

5. Remove the C-clip [1],and remove the tray 1 separation roller assy [2].

6. To reinstall, reverse the order of removal.

4.10.3 Replacing the tray 2 feed roller/tray 2 pick-up roller

A. Periodically replaced parts/cycle

- Tray 2 feed roller: Every 300,000 counts
- Tray 2 pick-up roller: Every 300,000 counts

B. Procedure

1. Slide out the tray 2.
2. Open the lower right-side door.
3. Remove the manual bypass tray rear cover.
See P.92
4. Open the manual bypass tray door.
5. Remove the interface cover /2.
See P.90

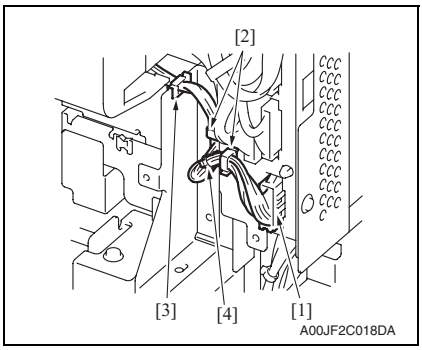

6. Disconnect the connector [1], and remove the harness from the wire saddles [2] and the edge cover [3].

NOTE

- **When reinstalling the harness, route it so that the harness ties [4] are positioned as shown in the illustration on the left.**

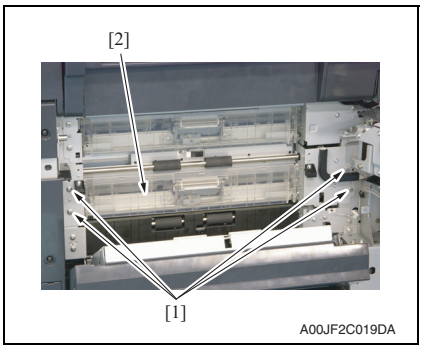

7. Remove four screws [1], and remove the tray 2 paper feed unit [2].

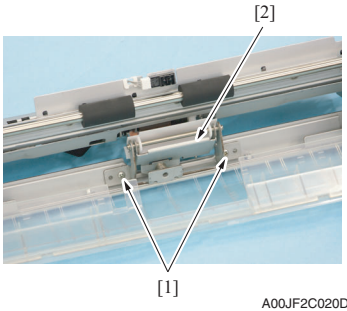

8. Remove two screws [1], and remove the tray 2 separation roller installation plate assy [2].

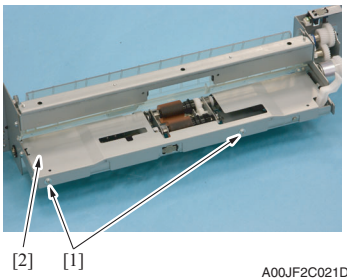

9. Remove two screws [1], and remove the tray 2 feed roller cover [2].

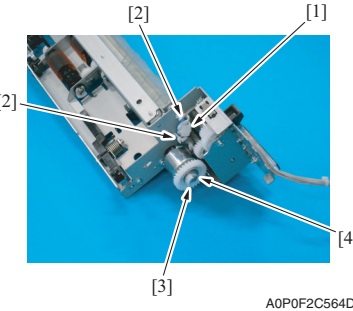

10. Disconnect the connector [1], and remove the harness from two wire saddles [2].
11. Remove the C-clip [3], and remove the tray 2 paper feed clutch [4].

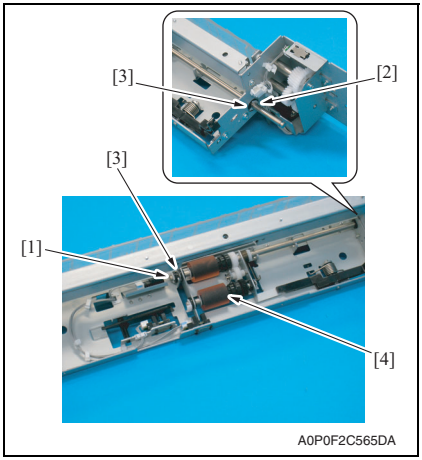

12. Remove the C-clip [1], C-ring [2] and two bearings [3], and remove the feed roller/pick-up roller assy [4].

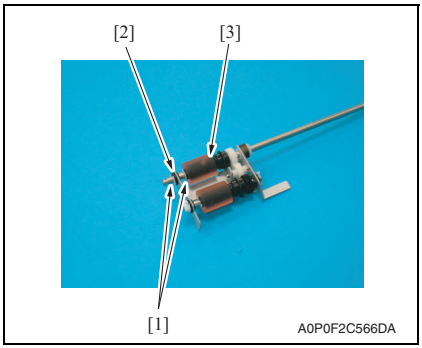

13. Remove two C-rings [1] and bearing [2], and remove the tray 2 feed roller [3].

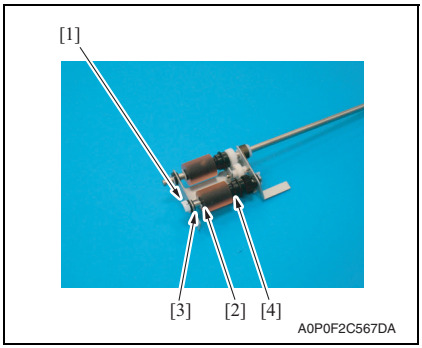

14. Remove the C-clip [1], C-ring [2] and bearing [3], and remove the tray 2 pick-up roller [4].

15. To reinstall, reverse the order of removal.

16. Remove the tray 2 separation roller assy.
See P.60

17. Select [Service Mode] → [Counter] → [Life] and clear the count of [2nd.].
See P.544

4.10.4 Replacing the tray 2 separation roller assy

A. Periodically replaced parts/cycle

- Tray 2 separation roller assy: Every 300,000 counts

B. Procedure

1. Slide out the tray 2.
2. Open the lower right door.
3. Open the manual bypass tray door.

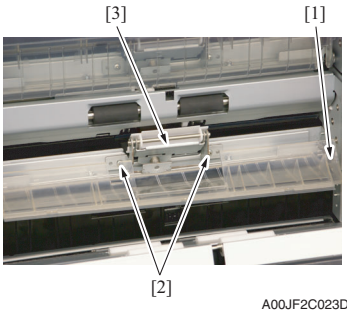

4. Opening the jam clearing cover [1], remove two screws [2] and take out the tray 2 separation roller assy [3].

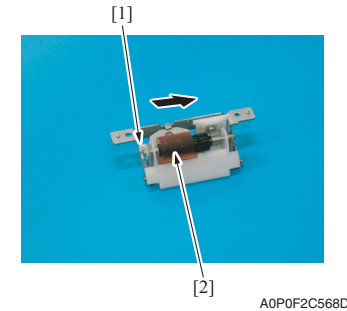

5. Remove the C-clip [1], and remove the tray 2 separation roller assy [2].

6. To reinstall, reverse the order of removal.

4.10.5 Replacing the tray 3 feed roller/tray 3 pick-up roller

A. Periodically replaced parts/cycle

- Tray 3 feed roller: Every 300,000 counts
- Tray 3 pick-up roller: Every 300,000 counts

B. Procedure

1. Slide out the tray 3.

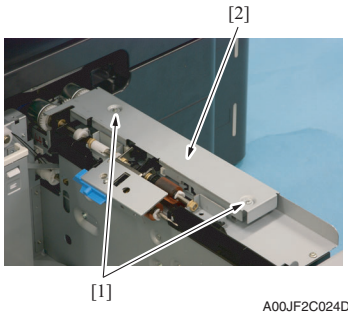

A00JF2C024DA

2. Remove two screws [1], and remove the tray 3 paper feed cover [2].

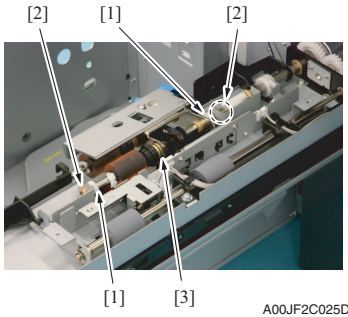

A00JF2C025DA

3. Remove two C-clips [1] and two bearings [2], and remove the feed roller/pick-up roller assy [3].

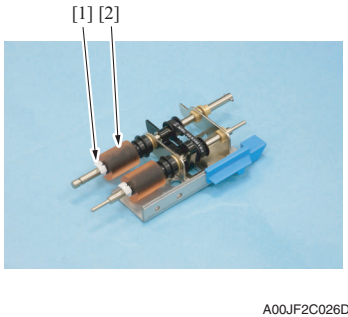

A00JF2C026DA

4. Remove the C-clip [1], and remove the tray 3 feed roller [2].

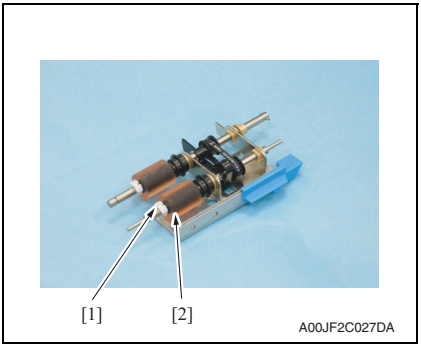

5. Remove the C-clip [1], and remove the tray 3 pick-up roller [2].

6. To reinstall, reverse the order of removal.
7. Remove the tray 3 separation roller.
See P.62
8. Select [Service Mode] → [Counter] → [Life] and clear the count of [3rd.].
See P.544

4.10.6 Replacing the tray 3 separation roller

A. Periodically replaced parts/cycle

- Tray 3 separation roller: Every 300,000 counts

B. Procedure

1. Remove the feed roller/pick-up roller assy.
See the replacement procedures 1 to 4 in “Tray 3 feed roller/tray 3 pick-up roller.”
See P.61

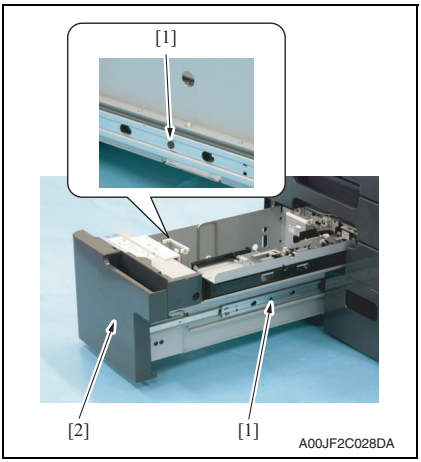

2. Remove two screws [1] and pull out the tray 3 [2] to the end.

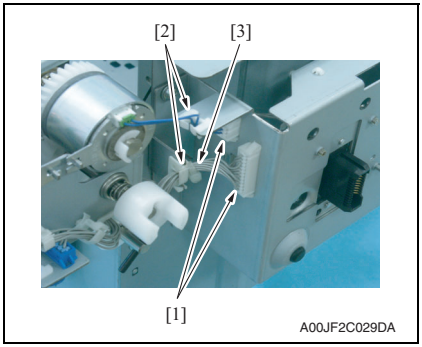

3. Disconnect two connectors [1], and remove the harness from two edge covers [2].

NOTE

- **When reinstalling the harness, route the harness so that the harness tie [3] is positioned as shown in the illustration on the left.**

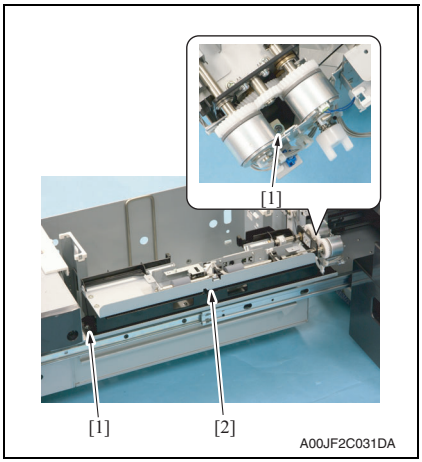

4. Remove two screws [1], and remove the tray 3 paper feed unit [2].

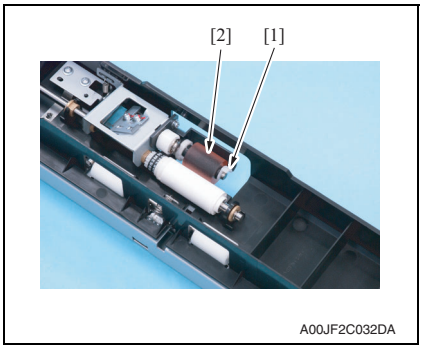

5. Remove the C-clip [1], and remove the tray 3 separation roller [2].

6. To reinstall, reverse the order of removal.

4.10.7 Replacing the tray 4 feed roller/tray 4 pick-up roller

A. Periodically replaced parts/cycle

- Tray 4 feed roller: Every 300,000 counts
- Tray 4 pick-up roller: Every 300,000 counts

B. Procedure

1. Slide out the tray 4.

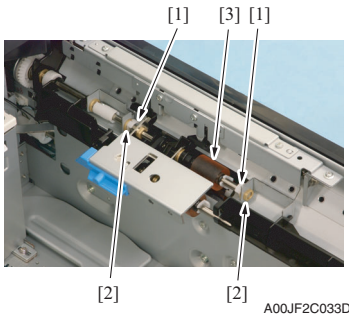

A00JF2C033DA

2. Remove two C-clips [1] and two bearings [2], and remove the feed roller/pick-up roller assy [3].

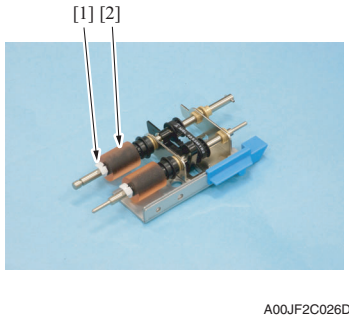

A00JF2C026DA

3. Remove the C-clip [1], and remove the tray 4 feed roller [2].

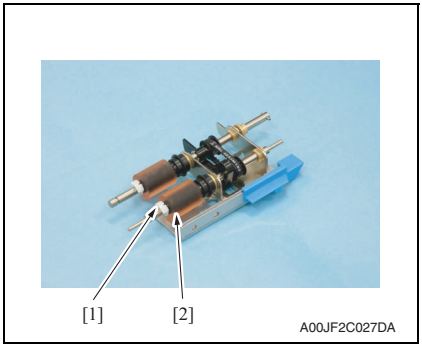

4. Remove the C-clip [1], and remove the tray 4 pick-up roller [2].

5. To reinstall, reverse the order of removal.
6. Remove the tray 4 separation roller.
See P.65
7. Select [Service Mode] → [Counter] → [Life] and clear the count of [4th.].
See P.544

4.10.8 Replacing the tray 4 separation roller

A. Periodically replaced parts/cycle

- Tray 4 separation roller: Every 300,000 counts

B. Procedure

1. Remove the feed roller/pick-up roller assy.
See the replacement procedures 1 to 4 in “Tray 4 feed roller/tray 4 pick-up roller.”
See P.64

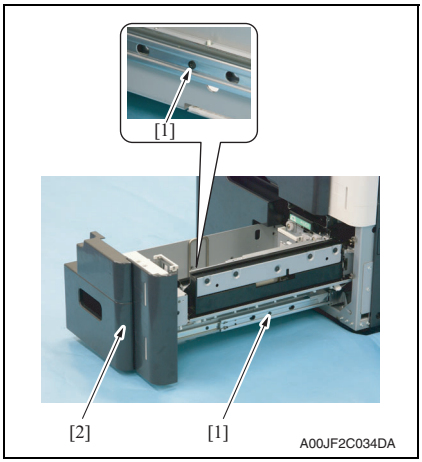

2. Remove the two screws [1] and pull out the tray 4 [2] to the end.

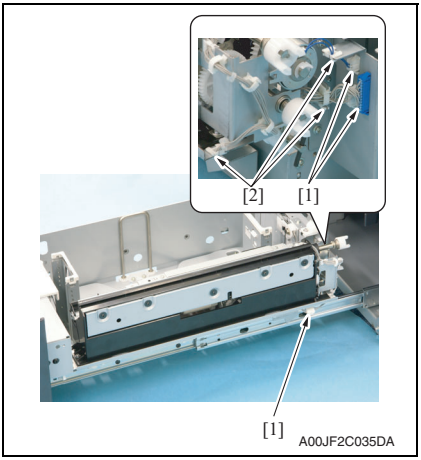

3. Disconnect three connectors [1], and remove the harness from three edge covers [2].

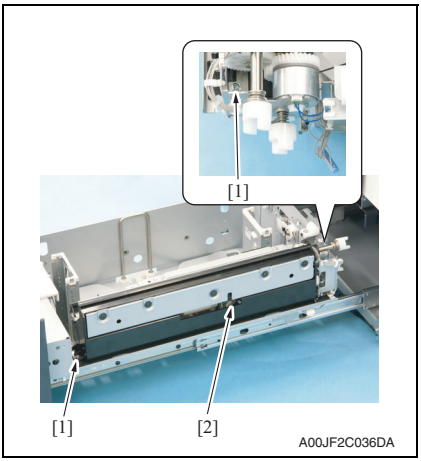

4. Remove two screws [1], and remove the tray 4 paper feed unit [2].

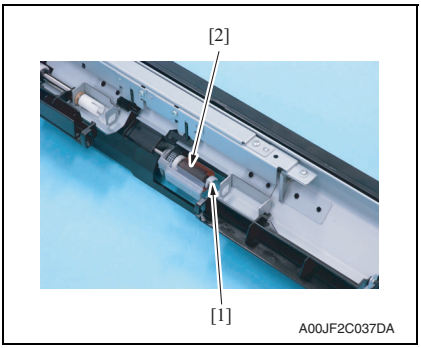

5. Remove the C-clip [1], and remove the tray 4 separation roller [2].

6. To reinstall, reverse the order of removal.

4.10.9 Replacing the manual bypass tray feed roller/manual bypass tray pick-up roller

A. Periodically replaced parts/cycle

- Manual bypass tray feed roller: Every 300,000 counts
- Manual bypass tray pick-up roller: Every 300,000 counts

B. Procedure

1. Remove the manual bypass tray separation roller assy.
See the replacement procedures 1 to 2 in “Manual bypass tray separation role assy.” See P.69

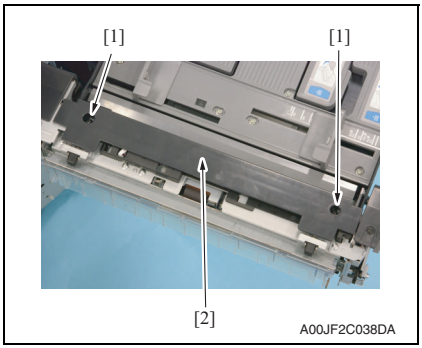

2. Remove two screws [1], and remove the manual bypass tray upper cover [2].

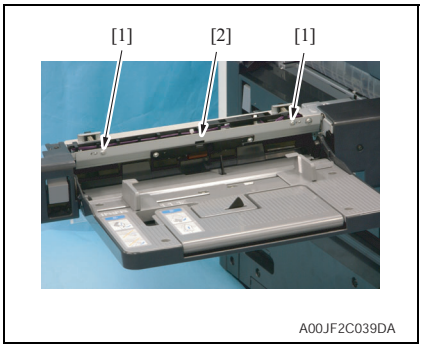

3. Remove two screws [1], and remove the manual bypass tray feed roller cover [2].

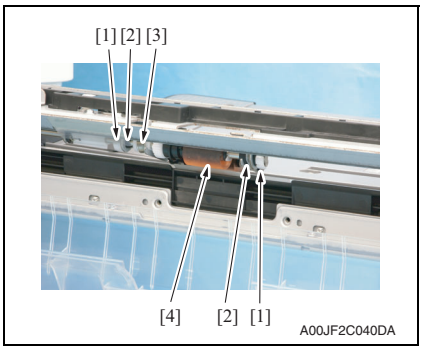

4. Remove two C-clips [1] and two bearings [2].
5. Remove the spring [3], and remove the feed roller/pick-up roller assy [4].

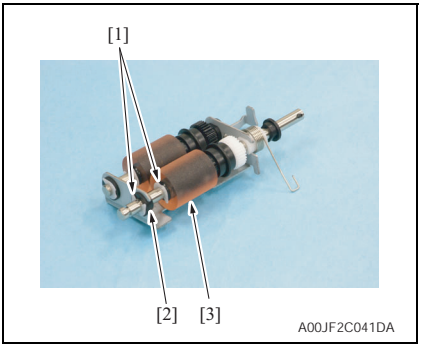

6. Remove two C-rings [1] and bearing [2], and remove the manual bypass tray feed roller [3].

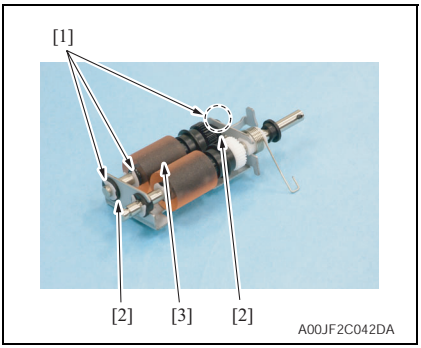

7. Remove three C-rings [1] and two bearings [2], and remove the manual bypass tray pick-up roller [3].

8. To reinstall, reverse the order of removal.

9. Remove the manual bypass tray separation roller assy.
See P.69

10. Select [Service Mode] → [Counter] → [Life] and clear the count of [Manual Tray].
See P.544

4.10.10 Replacing the manual bypass tray separation roller assy

A. Periodically replaced parts/cycle

- Manual bypass tray separation roller assy: Every 300,000 counts

B. Procedure

1. Open the manual bypass tray door.

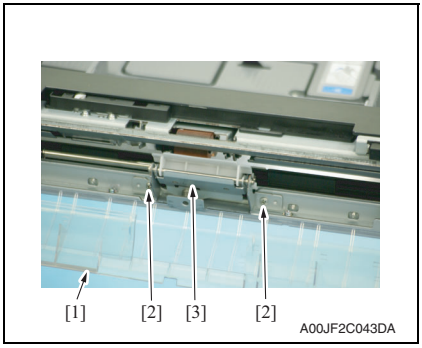

2. Opening the jam clearing cover [1], remove the two screws [2] and take out the manual bypass tray separation roller assy [3].

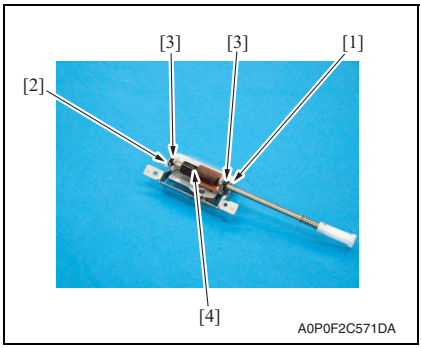

3. Remove the E-ring [1], C-clip [2] and the shaft [3], and remove the manual bypass tray separation roller assy [4].

4. To reinstall, reverse the order of removal.

4.11 Vertical conveyance section

4.11.1 Cleaning of the paper dust remover

A. Periodically cleaning parts/cycle

- Paper dust remover: Every 100,000 counts

B. Procedure

1. Open the upper right door.

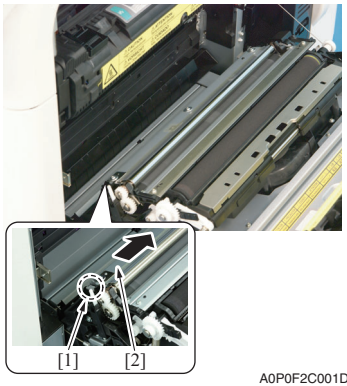

2. Pushing the hook [1], remove the paper dust remover [2].

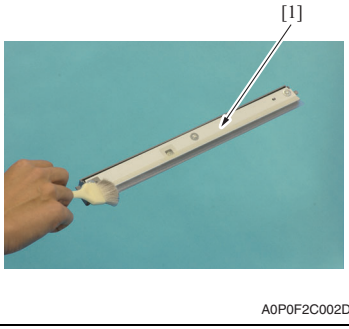

3. Using a brush, whisk dust off the paper dust remover [1].

4.12 Registration section

4.12.1 Cleaning of the timing roller

A. Periodically cleaning parts/cycle

- Timing roller: Every 100,000 counts

B. Procedure

1. Open the upper right door.

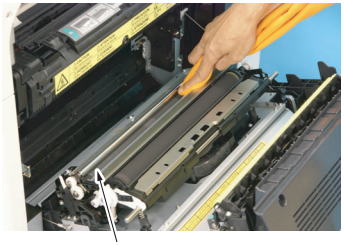

2. Using a cleaning pad dampened with alcohol, wipe the timing roller [1] clean of dirt.

4.13 Fusing section

4.13.1 Replacing the fusing unit

⚠ CAUTION

- **The temperature gets high in the vicinity of the fusing unit. You may get burned when you come into contact with the area. Before replacement operations, make sure that more than 20 minutes have elapsed since the main and sub power switches were turned off.**

A. Periodically replaced parts/cycle

- Fusing unit: Every 570,000 counts

B. Procedure

1. Open the upper right door.

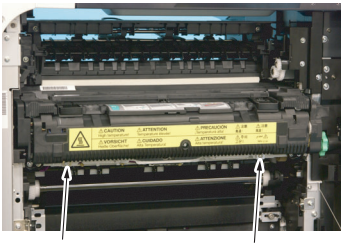

2. Loosen two screws [1] of the fusing unit.

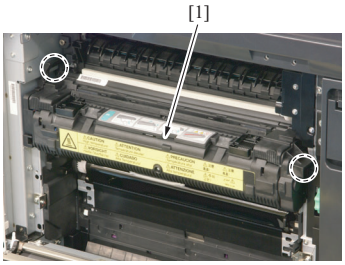

A00JF2C058DA

3. Hold the position as shown in the left and remove the fusing unit [1].

NOTE

- **When removing the fusing unit, grip it with both hands to avoid letting the fusing unit fall down.**

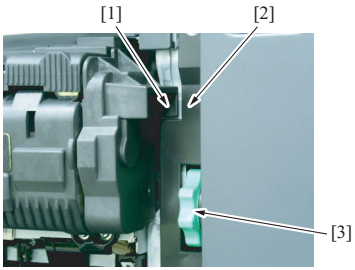

A00KF2C508DA

4. Clean the IH coil unit.
See P.73

5. To reinstall, reverse the order of removal.

NOTE

- **When reinstalling the fusing unit, be sure to press the fusing unit into the machine until the surfaces of the A [1] and B [2] are level with each other.**
  To remove unevenness between the surfaces of the A and B, turn the misfeed-clearing dial [3] while pushing the fusing unit into the machine.
- **After ensuring that the surfaces are level, secure the fusing unit by tightening the two mounting screws on the back side first, and then the front side.**

6. Select [Service Mode] → [Counter] → [Life] → [New Release] and carry out new release for the fusing unit.
See P.544

4.13.2 Cleaning of the IH coil unit

A. Periodically cleaning parts/cycle

- IH coil unit: Every 570,000 counts (When the fusing unit is replaced)

B. Procedure

1. Remove the fusing unit.
See P.71

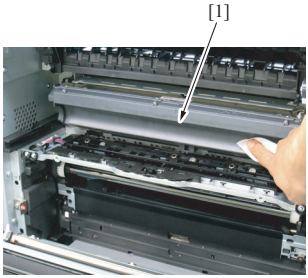

2. Using a cleaning pad dampened with alcohol, wipe the IH coil unit [1] clean of dirt.

4.14 Duplex section

4.14.1 Cleaning of the duplex transport rollers

A. Periodically cleaning parts/cycle

- Duplex transport rollers: Every 100,000 counts

B. Procedure

1. Open the duplex door.

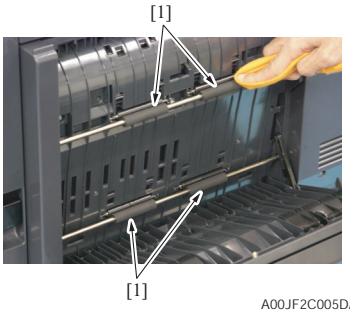

2. Using a cleaning pad dampened with alcohol, wipe the transport rollers [1] clean of dirt.

5. OTHER MAINTENANCE ITEMS

5.1 Disassembly/adjustment prohibited items

A. Paint-locked screws

NOTE
- **To prevent loose screws, a screw lock in blue or green series color is applied to the screws.**
- **The screw lock is applied to the screws that may get loose due to the vibrations and loads created by the use of machine or due to the vibrations created during transportation.**
- **If the screw lock coated screws are loosened or removed, be sure to apply a screw lock after the screws are tightened.**

B. Red-painted screws

NOTE
- **The screws which are difficult to be adjusted in the field are painted in red in order to prevent them from being removed by mistake.**
- **Do not remove or loosen any of the red-painted screws in the field. It should also be noted that, when two or more screws are used for a single part, only one representative screw may be marked with the red paint.**

C. Variable resistors on board

NOTE
- **Do not turn the variable resistors on boards for which no adjusting instructions are given in Adjustment/Setting.**

D. Removal of PWBs

⚠ CAUTION
- **When removing a circuit board or other electrical component, refer to "Handling of PWBs" and follow the corresponding removal procedures.**
- **The removal procedures given in the following omit the removal of connectors and screws securing the circuit board support or circuit board.**
- **Where it is absolutely necessary to touch the ICs and other electrical components on the board, be sure to ground your body.**

5.1.1 CCD unit

A. Reason for prohibition
- Since the accuracy of the CCD unit is guaranteed as a unit, no accuracy is guaranteed if it is disassembled.
  Therefore, screws that lead to the disassembly of the CCD unit must not be removed.

5.1.2 PH unit

A. Reason for prohibition
- The laser runs inside the PH unit. Opening the cover may cause dust to enter and interrupt the laser. Do no remove any screw which may disassemble the PH unit.

5.1.3 Fusing unit

A. Reason for prohibition
- Inner part of the fusing unit and the position of the fusing belt are adjusted prior to shipping. Do not remove any screw which may disassemble the fusing unit.

5.2 Disassembly/reassembly parts list

No.	Section	Part name	Ref. page
1	Exterior parts	Upper front door	P.79
2		Lower front door	P.80
3		Upper front cover /1	P.80
4		Upper front cover /2	P.81
5		Right front cover	P.81
6		Lower front cover	P.82
7		Upper left cover	P.83
8		Lower left cover	P.83
9		Rear left cover	P.84
10		Paper exit rear cover	P.84
11		Scanner rear cover	P.85
12		Scanner right cover	P.85
13		Scanner upper rear cover/1	P.86
14		Scanner upper rear cover/2	P.86
15		Scanner left cover	P.87
16		Scanner upper front cover	P.87
17		Scanner front cover	P.88
18		USB interface cover	P.88
19		Original glass	P.89
20		Interface cover/1	P.90
21		Interface cover/2	P.90
22		Rear right cover/1	P.91
23		Rear right cover/2	P.91
24		Manual bypass tray rear cover	P.92
25		Upper rear cover/1	P.92
26		Upper rear cover/2	P.92
27		Lower rear cover	P.93
28		Front right cover	P.93
29		Control panel assy	P.93
30		Exit tray	P.94
31		Tray 1/2	P.96
32		Tray 3/4	P.96

No.	Section	Part name	Ref. page
33	Units	PH unit	P.97
34		Duplex unit	P.99
35		Manual bypass tray unit	P.100
36		CCD unit	P.101
37		Original glass moving unit	P.103
38		Glass step sheet	P.105
39		Exposure unit	P.107
40		Hard disk	P.109
41		IH coil	P.111
42		Intermediate transport roller assy	P.115
43		Main drive unit	P.116
44		LCC drive unit	P.118
45		Scanner chassis	P.123
46	Boards	Scanner relay board (REYB/SCAN)	P.125
47		Original glass position control board (OGPCB)	P.126
48		Inverter board (INVB)	P.127
49		PH relay board (REYB/PH)	P.128
50		Paper feed/transport drive board (PFTDB)	P.129
51		DC power supply (DCPU)	P.130
52		Relay drive board (REDB)	P.133
53		Printer control board (PRCB)	P.134
54		PCI board (PCIB)	P.136
55		MFP board (MFPB)	P.137
56		High voltage unit/2 (HV2)	P.140
57		Service EEPROM board (SV ERB)	P.141
58		High voltage unit/1 (HV1)	P.144
59		IH power supply (IHPU)	P.149
60		Paper size detect board/1 (PSDTB/1)	P.151
61		Paper size detect board/2 (PSDTB/2)	P.152
62		ADU transport motor/1 (M31)	P.153
63		ADU transport motor/2 (M32)	P.154
64		Bypass tray up down motor (M28)	P.155
65		Bypass paper feed motor (M27)	P.155
66		Scanner motor (M201)	P.159
67		Original glass moving motor (M202)	P.161
68		Waste toner agitating motor (M20)	P.163
69		Transport motor (M25)	P.164
70		Vertical transport motor (M26)	P.165
71		Transfer belt motor (M1)	P.166

No.	Section	Part name	Ref. page
72	Motors	Color PC drum motor (M16)	P.166
73		Color developing motor (M17)	P.167
74		2nd image transfer pressure retraction motor (M3)	P.167
75		Registration motor (M2)	P.168
76		Fusing pressure retraction motor (M29)	P.170
77		Fusing motor (M30)	P.171
78		Switchback motor (M33)	P.171
79		Exit motor (M4)	P.174
80		K PC drum motor (M18)	P.175
81		K developing motor (M19)	P.176
82		Tray1 lift-up motor (M6)	P.176
83		Tray2 lift-up motor (M8)	P.177
84		Tray3 lift-up motor (M23)	P.178
85		Tray4 lift-up motor (M24)	P.178
86		Tray1 vertical transport motor (M5)	P.179
87		Tray2 vertical transport motor (M7)	P.180
88		Take-up motor (M22)	P.181
89		Charge cleaning motor/K (M15)	P.182
90		Cleaner motor (M38)	P.184
91		1st image transfer pressure retraction motor (M21)	P.188
92		Toner cartridge motor C/K (M14)	P.188
93		Toner cartridge motor Y/M (M13)	P.189
94		Toner supply motor/Y (M9)	P.190
95		Toner supply motor/M (M10)	
96		Toner supply motor/C (M11)	
97		Toner supply motor/K (M12)	
98	Clutches	Tray 1 paper feed clutch (CL1)	P.193
99		Tray 2 paper feed clutch 2 (CL2)	P.194
100		Horizontal transport clutch (CL3)	P.195
101		Tray 3 paper feed clutch (CL5)	P.195
102		Tray 3 transport clutch (CL6)	P.195
103		Tray 4 paper feed clutch (CL7)	P.196
104	Others	IDC registration sensor/F (IDCS/F), IDC registration sensor/R (IDCS/R)	P.197
105		Scanner drive cables	P.199
106		Tray 3/4 lift wire	P.209

5.3 Cleaning parts list

No.	Section	Part name	Ref. page
1	Processing section	Transfer belt unit	P.215
2	Tray 1	Tray 1 feed roller	P.215
3		Tray 1 pick-up roller	P.215
4		Tray 1 separation roller	P.216
5		Tray 1 transport roller	P.216
6	Tray 2	Tray 2 feed roller	P.217
7		Tray 2 pick-up roller	P.217
8		Tray 2 separation roller	P.217
9		Tray 2 transport roller	P.218
10	Tray 3	Tray 3 feed roller	P.218
11		Tray 3 pick-up roller	P.218
12		Tray 3 separation roller	P.219
13		Tray 3 transport roller	P.219
14	Tray 4	Tray 4 feed roller	P.220
15		Tray 4 pick-up roller	P.220
16		Tray 4 separation roller	P.221
17		Tray 4 transport roller	P.221
18	Manual bypass tray	Manual bypass tray feed roller	P.221
19		Manual bypass tray pick-up roller	P.222
20		Manual bypass tray separation roller	P.222
21	Transport section	Intermediate transport roller	P.222
22	Scanner	Original glass	P.223
23		Scanner rails	P.224
24		Mirrors (1st/2nd/3rd)	P.224
25		Lens	P.224
26		CCD sensor	P.225

5.4 Need lubrication parts list

No.	Section	Part name	Ref. page
1	Fusing section	Fusing unit	P.227

5.5 Disassembly/reassembly procedure

5.5.1 Upper front door

1. Open the upper front door.

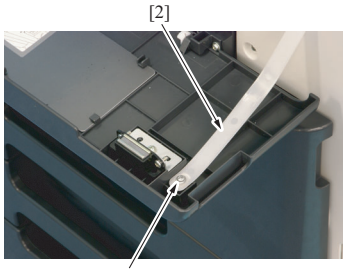

A00JF2C061DA

2. Remove the screw [1], and remove the stopper [2].

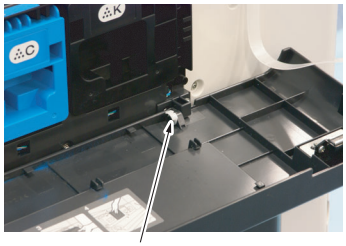

A00JF2C062DA

3. Remove the C-clip [1].

A00JF2C063DA

4. Slide the upper front door [1] to the left to remove it.

5. To reinstall, reverse the order of removal.

5.5.2 Lower front door

1. Open the lower front door.

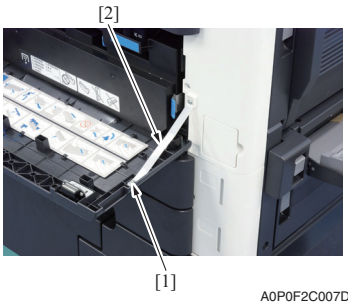

2. Remove the screw [1], and remove the stopper [2].

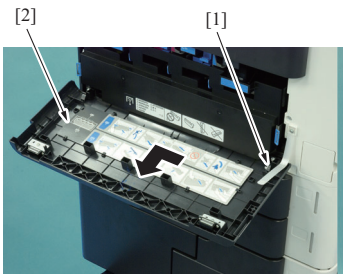

3. Remove the C-clip [1].
4. Slide the lower front door [2] to the left to remove it.
5. To reinstall, reverse the order of removal.

5.5.3 Upper front cover /1

1. Open the upper front door.
2. Remove the control panel assy.
See P.93

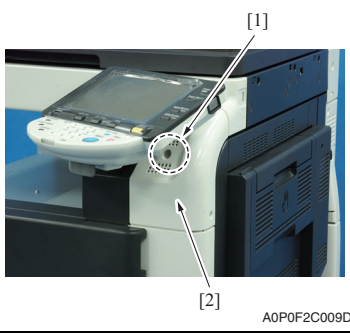

3. Remove the screw [1], and remove the upper front cover /1 [2].
4. To reinstall, reverse the order of removal.

5.5.4 Upper front cover /2

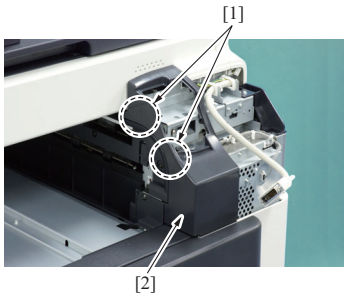

1. Remove two screws [1], and remove the upper front cover /2 [2].

2. To reinstall, reverse the order of removal.

5.5.5 Right front cover

1. Remove the upper front door.
See P.79
2. Open the upper right door.
3. Remove the front right cover.
See P.93
4. Open the lower front door.

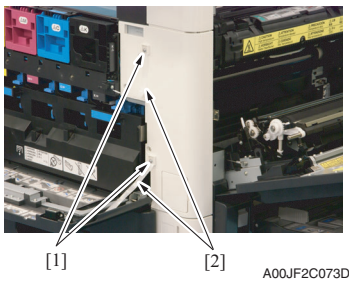

5. Remove two screws [1], and remove the stoppers [2] of the upper front door and the lower front door.

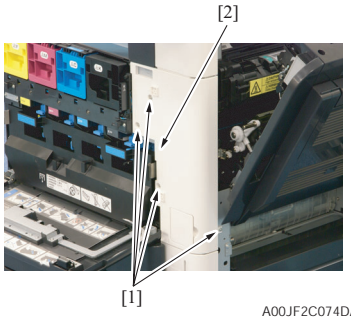

6. Remove four screws [1], and remove the right front cover [2].

7. To reinstall, reverse the order of removal.

5.5.6 Lower front cover

1. Slide out the tray 1/2.
2. Remove the front right cover.
See P.93

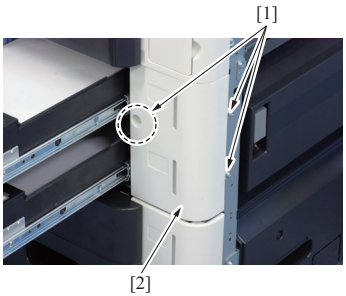

3. Remove three screws [1], and remove the lower front cover [2].

NOTE

- **Do not remove it in rush as it is connected to the harness.**

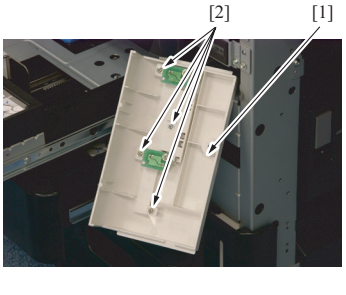

4. Turn back the lower front cover [1] and remove four screws [2].

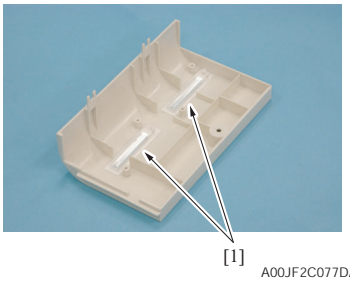

5. Remove two empty display lenses [1].

6. To reinstall, reverse the order of removal.

5.5.7 Upper left cover

1. Open the lower front door.

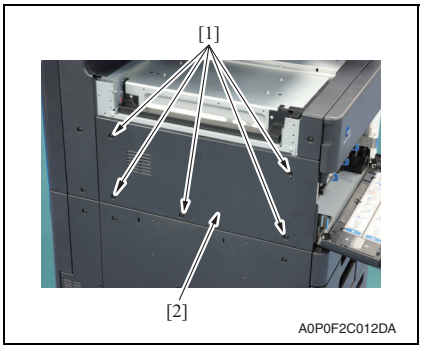

2. Remove five screws [1], and remove the upper left cover [2].
3. To reinstall, reverse the order of removal.

5.5.8 Lower left cover

1. Slide out the tray 1/2/3.
2. Remove the lower rear cover.
See P.93

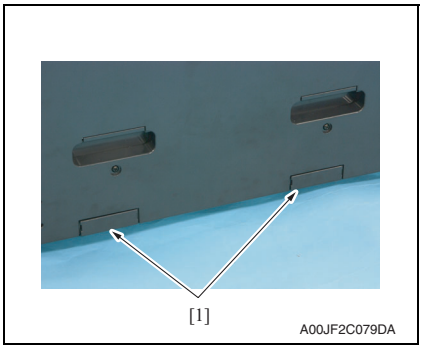

3. Remove two covers [1].

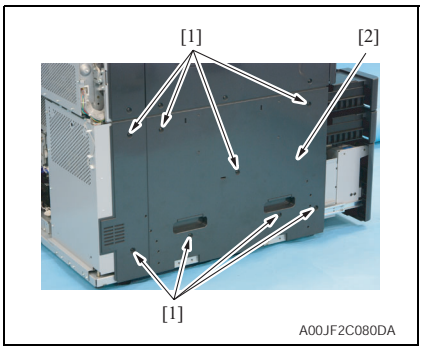

4. Remove eight screws [1], and remove the lower left cover [2].
5. To reinstall, reverse the order of removal.

5.5.9 Rear left cover

1. Remove the upper left cover.
See P.83
2. Remove the upper rear cover /2.
See P.92

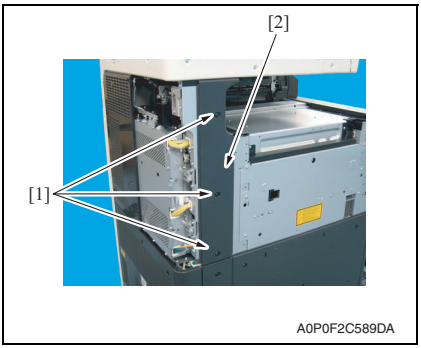

3. Remove three screws [1], and remove the rear left cover [2].

4. To reinstall, reverse the order of removal.

5.5.10 Paper exit rear cover

1. Remove the rear left cover.
See P.84

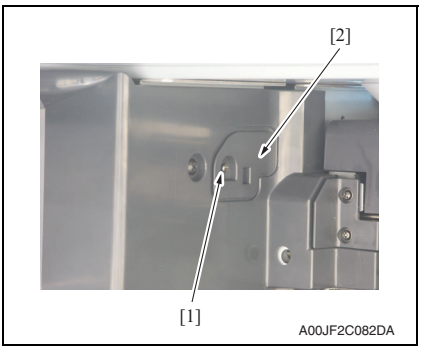

2. Remove the screw [1], and remove the cover [2].

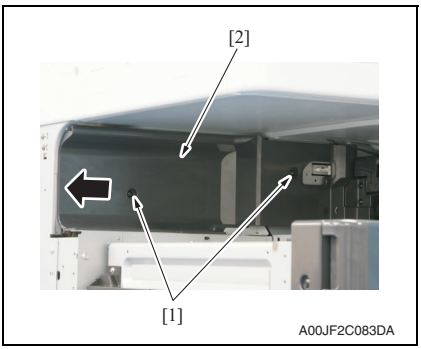

3. Remove two screws [1], and slide the paper exit rear cover [2] to remove it.

4. To reinstall, reverse the order of removal.

5.5.11 Scanner rear cover

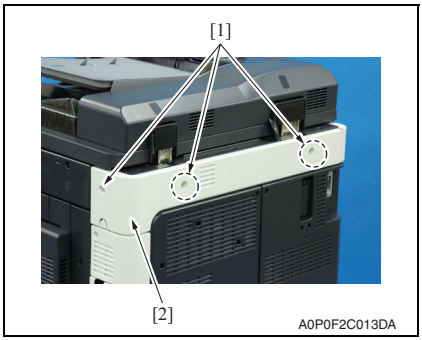

1. Remove three screws [1], and remove the scanner rear cover [2].

2. To reinstall, reverse the order of removal.

5.5.12 Scanner right cover

1. Remove the scanner rear cover.
See P.85

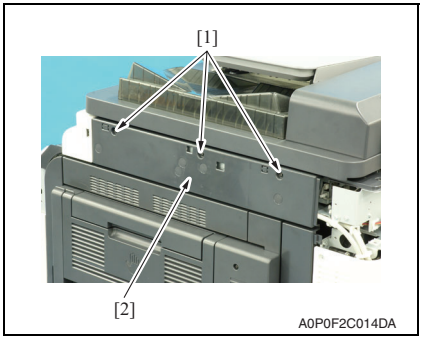

2. Remove three screws [1], and remove the scanner right cover [2].

3. To reinstall, reverse the order of removal.

5.5.13 Scanner upper rear cover/1

1. Remove the ADF.
See P.19 of the DF-618/SP-501 service manual.
2. Remove the scanner right cover.
See P.85

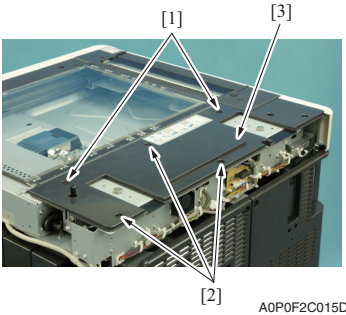

3. Remove two shoulder screws [1] and three screws [2], and remove the scanner upper rear cover/1 [3].
4. To reinstall, reverse the order of removal.

5.5.14 Scanner upper rear cover/2

1. Remove the scanner upper rear cover/1.
See P.86

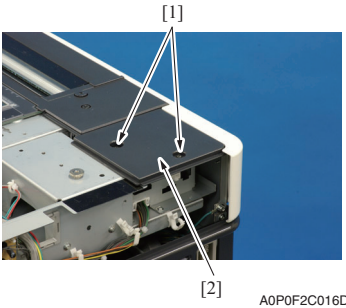

2. Remove two screws [1], and remove the scanner upper rear cover/2 [2].
3. To reinstall, reverse the order of removal.

5.5.15 Scanner left cover

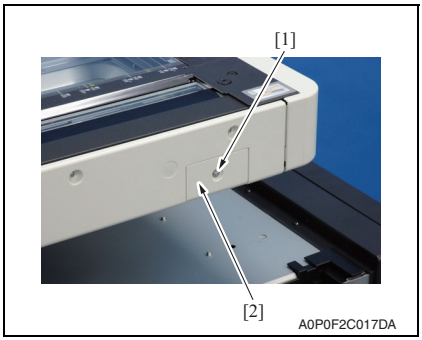

1. Remove the screw [1], and remove the cover [2].

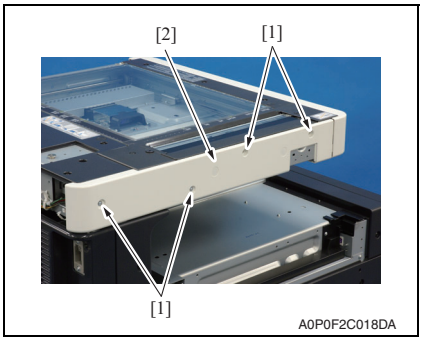

2. Remove four screws [1], and remove the scanner left cover [2].

3. To reinstall, reverse the order of removal.

5.5.16 Scanner upper front cover

1. Open the ADF.

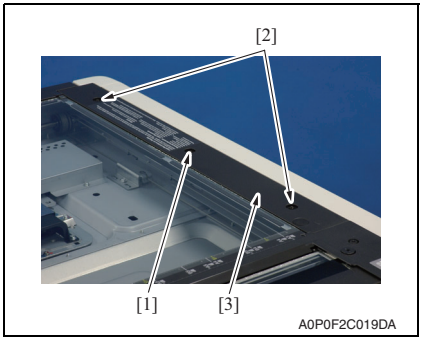

2. Remove the screw [1] and two shoulder screws [2], and remove the scanner upper front cover [3].

3. To reinstall, reverse the order of removal.

5.5.17 Scanner front cover

1. Remove the scanner upper front cover.
See P.87
2. Remove the upper front cover /1 and the upper front cover /2.
See P.80
3. Remove the scanner left cover.
See P.87

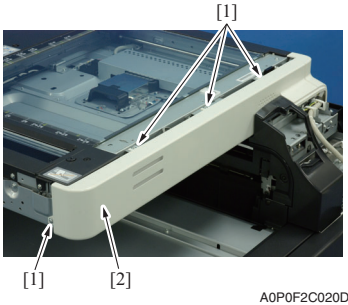

A0P0F2C020DA

4. Remove four screws [1], and remove the scanner front cover [2].

NOTE

- **Do not remove it in rush as it is connected to the harness.**

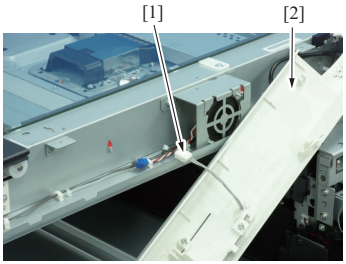

A0P0F2C021DA

5. Disconnect the connector [1], and remove the scanner front cover [2].

6. To reinstall, reverse the order of removal.

5.5.18 USB interface cover

1. Remove the upper front cover /2.
See P.81

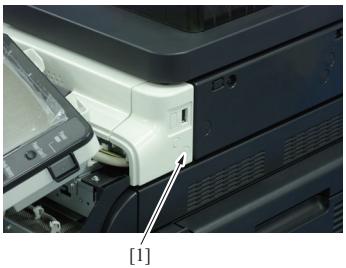

A0P0F2C022DA

2. Remove the cap [1].

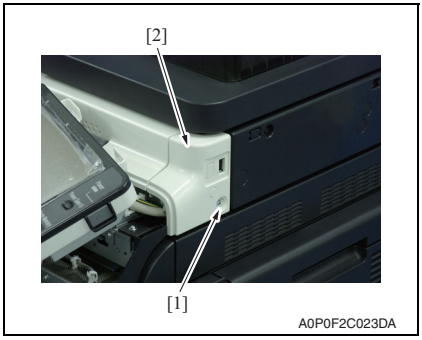

3. Remove the screw [1], and remove the USB interface cover [2].

4. To reinstall, reverse the order of removal.

5.5.19 Original glass

1. Remove the scanner right cover.
See P.85
2. Remove the scanner upper front cover.
See P.87

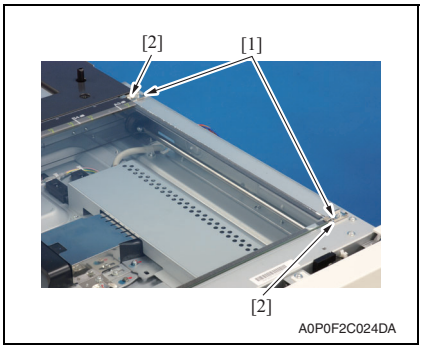

3. Remove each screw [1], and remove the original glass fixing bracket (near side/inmost side) [2].

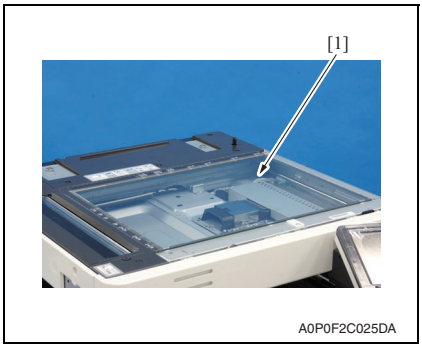

4. Remove the original glass [1].

5. To reinstall, reverse the order of removal.

5.5.20 Interface cover/1

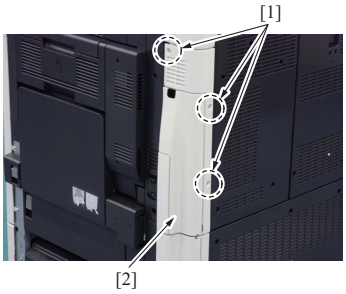

1. Remove three screws [1], and remove the interface cover/1 [2].

2. To reinstall, reverse the order of removal.

5.5.21 Interface cover/2

1. Open the interface cover/2.

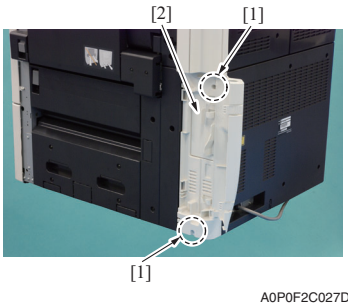

2. Remove two screws [1], and remove the interface cover/2 [2].

3. To reinstall, reverse the order of removal.

5.5.22 Rear right cover/1

1. Open the upper right door.
2. Remove the ozone filter.
See P.31

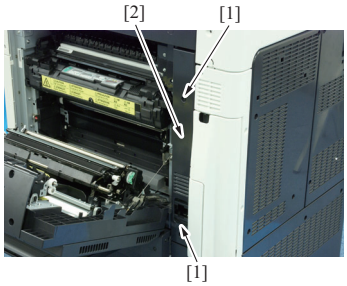

3. Remove two screws [1], and remove the rear right cover/1 [2].
4. To reinstall, reverse the order of removal.

5.5.23 Rear right cover/2

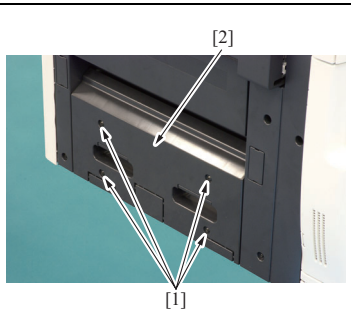

1. Remove four screws [1], and remove the lower right cover [2].

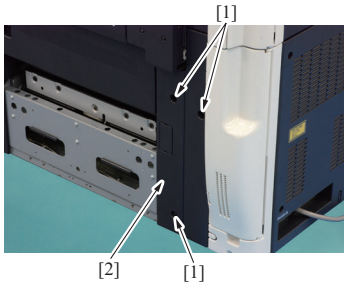

2. Remove three screws [1], and remove the rear right cover/2 [2].
3. To reinstall, reverse the order of removal.

5.5.24 Manual bypass tray rear cover

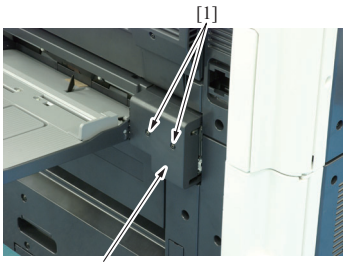

1. Remove two screws [1], and remove the Manual bypass tray rear cover [2].

2. To reinstall, reverse the order of removal.

5.5.25 Upper rear cover/1

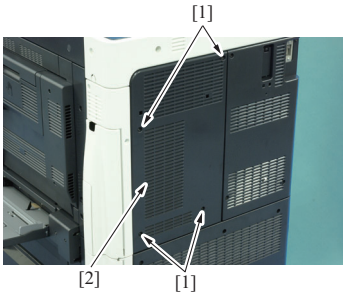

1. Remove four screws [1], and remove the upper rear cover/1 [2].

2. To reinstall, reverse the order of removal.

5.5.26 Upper rear cover/2

1. Remove the toner filter.
See P.31

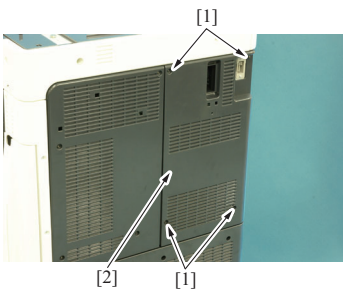

2. Remove four screws [1], and remove the upper rear cover/2 [2].

3. To reinstall, reverse the order of removal.

5.5.27 Lower rear cover

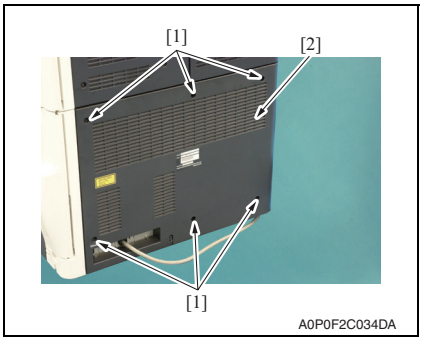

1. Remove six screws [1], and remove the lower rear cover [2].

2. To reinstall, reverse the order of removal.

5.5.28 Front right cover

1. Open the manual bypass tray door.

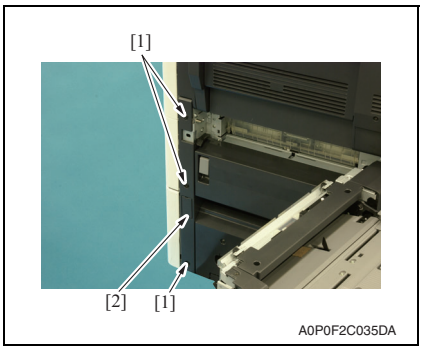

2. Remove three screws [1], and remove the front right cover [2].

3. To reinstall, reverse the order of removal.

5.5.29 Control panel assy

1. Remove the upper front cover /2.
See P.81

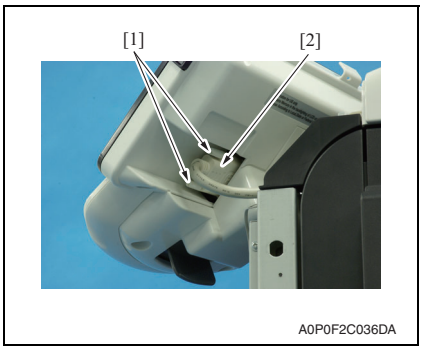

2. Loosen two screws [1], and disconnect the connector [2].

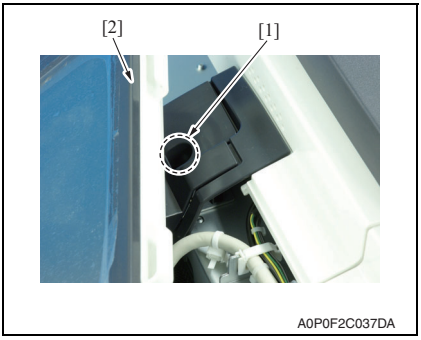

3. Remove the screw [1], and remove the control panel assy [2].

4. To reinstall, reverse the order of removal.

5.5.30 Exit tray (option: OT-503)

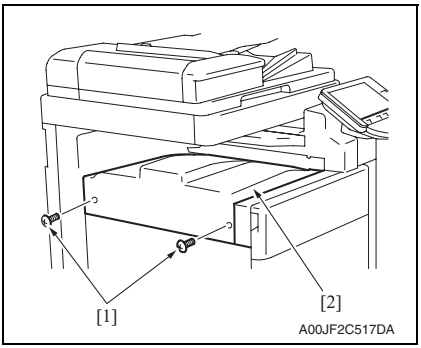

1. Remove two screws [1], and remove the exit tray [2].

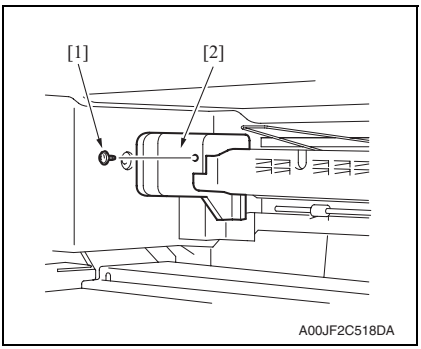

2. Remove the screw [1], and remove the connector cover [2].

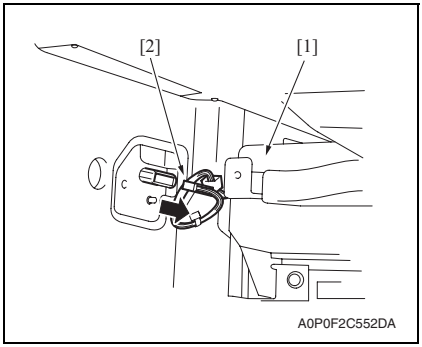

3. Disconnect the connector [2] of the fan unit [1].

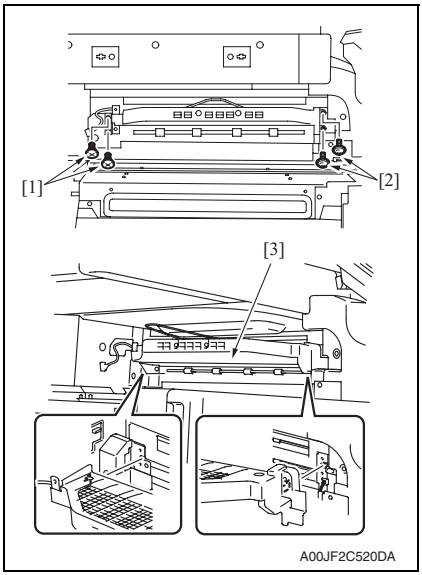

4. Remove two shoulder screws [1] and two screws [2], and remove the fan unit [3].

5. To reinstall, reverse the order of removal.

5.5.31 Tray 1/2

NOTE

- **Tray 1 and 2 has the same mechanism. The procedure is mainly for the tray 1.**

1. Slide out the tray.

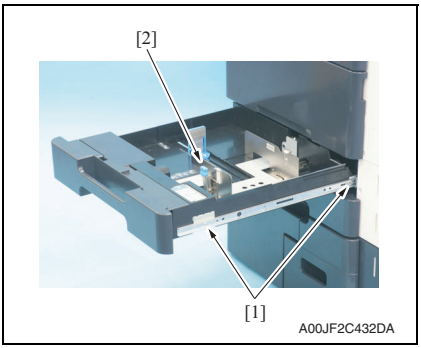

2. Remove two screws [1], and remove the tray [2].

3. To reinstall, reverse the order of removal.

5.5.32 Tray 3/4

NOTE

- **Tray 3 and 4 has the same mechanism. The procedure is mainly for the tray 3.**

1. Slide out the tray.

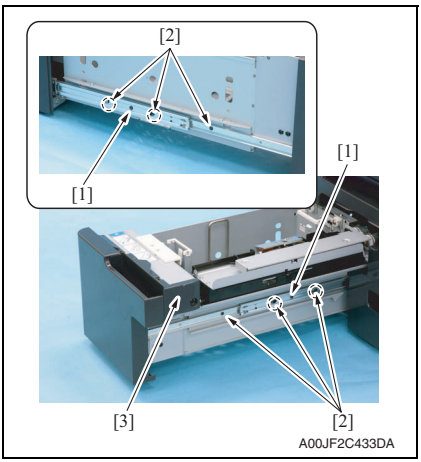

2. Remove two screws [1] and six screws [2], and remove the tray [3].

3. To reinstall, reverse the order of removal.

5.5.33 PH unit

CAUTION
• **Do not replace the printer head unit while the power is ON. Laser beam generated during the above mentioned activity may cause blindness.**
• **Do not disassemble or adjust the printer head unit. Laser beam generated during the above mentioned activity may cause blindness.**

1. Remove the upper left cover.
See P.83
2. Remove the lower left cover.
See P.83

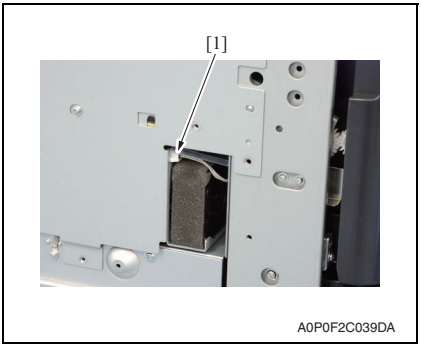

3. Disconnect the connector [1].

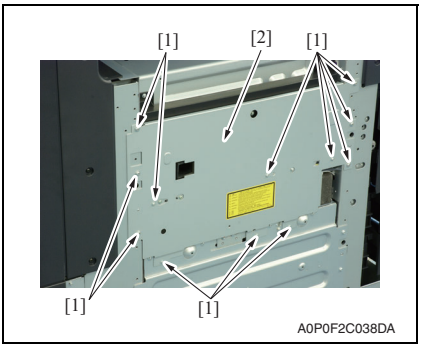

4. Remove twelve screws [1], and remove the PH unit protective shield [2].

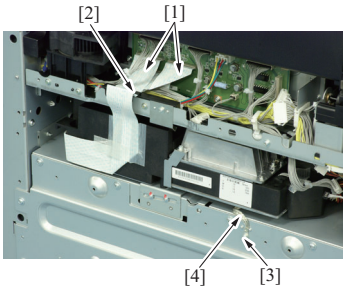

A0P0F2C040DA

5. Unplug two flat cables [1] and removed if from the cable guide [2].
6. Remove the screw [3] to remove the ground terminal [4].

NOTE

- **Handle the flat cables carefully. Remove them from the cable guide with care while making it parallel to the guide.**

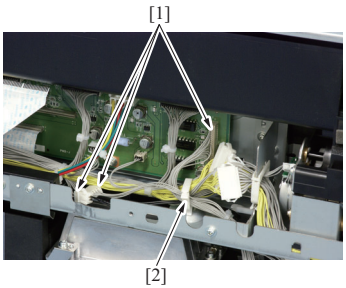

A0P0F2C041DA

7. Disconnect three connectors [1], and remove the harness from the wire saddle [2].

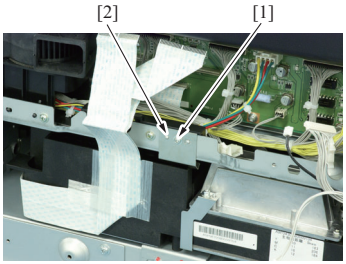

A0P0F2C042DA

8. Remove the screw [1] and take out the plate spring [2].

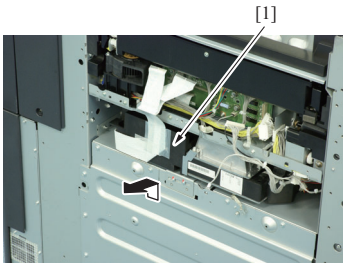

A0P0F2C043DA

9. Hold up the PH unit [1] slightly and pull it toward to remove.

10. To reinstall, reverse the order of removal.

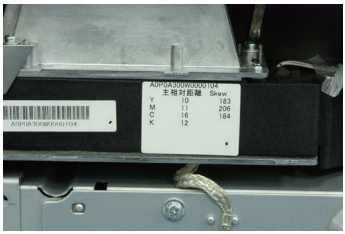

A0P0F2C044DA

11. Select [Skew adjustment] after selecting [Service Mode] → [Machine] → [Skew adjustment], and input the adjustment value that is put on the side of the replaced PH unit.
See P.477

12. Execute [Skew adjustment] and [Skew adjustment reset] after selecting [Service Mode] → [Machine] → [Skew adjustment].

5.5.34 Duplex unit

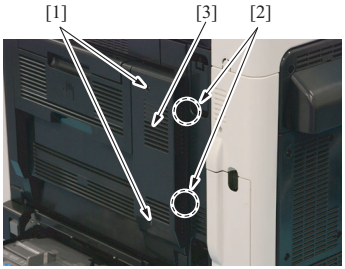

A00JF2C105DA

1. Remove two screws [1] and two tabs [2] to take out the duplex unit cover [3].

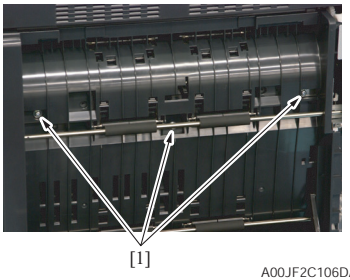

A00JF2C106DA

2. Open the duplex unit door.
3. Remove three screws [1].

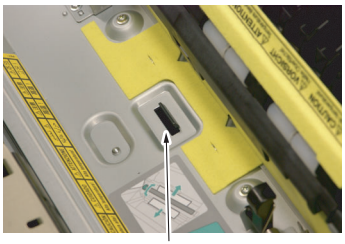

4. Open the upper right door, and remove the tab [1].

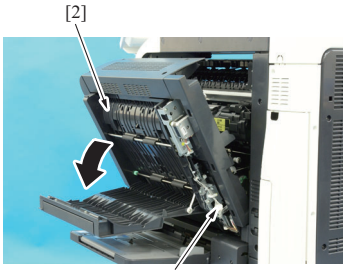

5. Disconnect the connector [1], and remove the duplex unit [2].

6. To reinstall, reverse the order of removal.

5.5.35 Manual bypass tray unit

1. Remove the rear right cover /2.
See P.91

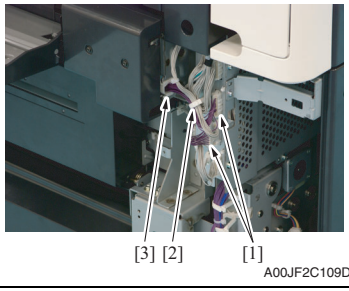

2. Disconnect two connectors [1], and remove the harness from the wire saddle [2] and the edge cover [3].

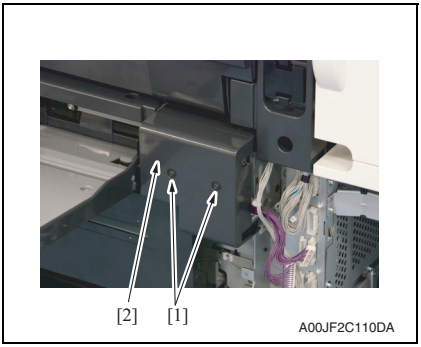

3. Remove two screws [1], and remove the manual bypass tray rear cover [2].

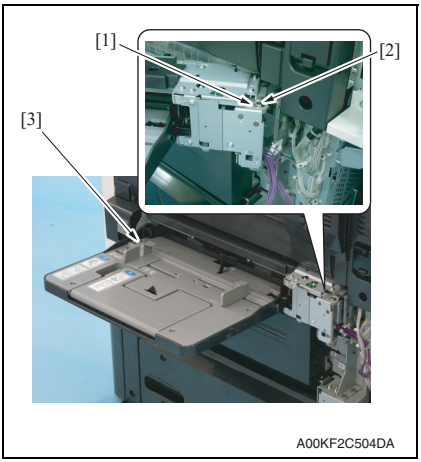

4. Open the manual bypass tray.
5. Remove the E-ring [1].
6. Remove the hinge shaft [2] from below and remove the manual bypass tray [3].

7. To reinstall, reverse the order of removal.

5.5.36 CCD unit

A. Removal procedure

1. Remove the original glass.
See P.89

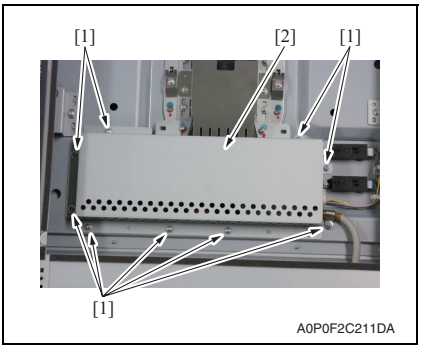

2. Remove nine screws [1], and remove the CCD board protective shield [2].

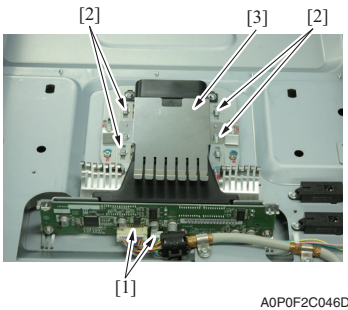

3. Disconnect two connectors [1].
4. Remove four screws [2], and remove the CCD unit [3].

B. Reinstall procedure

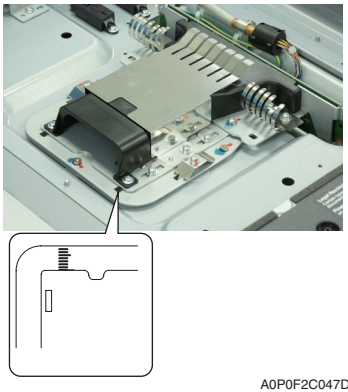

1. Set the CCD unit to the mounting position at the center of the scale, and fix it with four screws.

2. Reinstall the original glass.
3. Turn ON the main power switch and sub power switch.
4. Carry out the [Cross Direction Adjustment]. If the specifications are not met, loosen the CCD unit mounting screws and move the CCD unit in the sub scan direction as necessary.
See P.473

NOTE

- **Hold the CCD unit by hand when moving it. NEVER use a screwdriver or similar tool to tap to move it, as a varied distance between the CCD sensor and lens results.**
- **When CCD unit is replaced, [Scan Calibration] and [Line Mag Setting] under [System 2] available in Service Mode should be OFF.**

5.5.37 Original glass moving unit

A. Removal procedure

1. Remove the scanner left cover.
See P.87
2. Remove the scanner front cover.
See P.88
3. Remove the original glass.
See P.89
4. Remove the original glass moving motor.
See P.161
5. Remove the glass step sheet.
See P.105

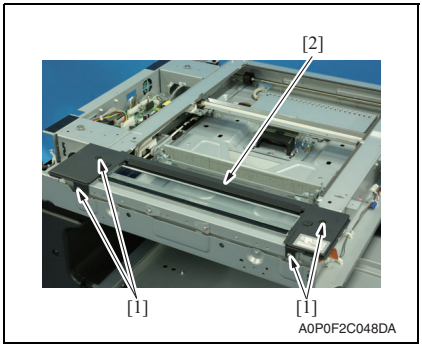

6. Remove four screws [1], and remove the original glass moving unit cover [2].

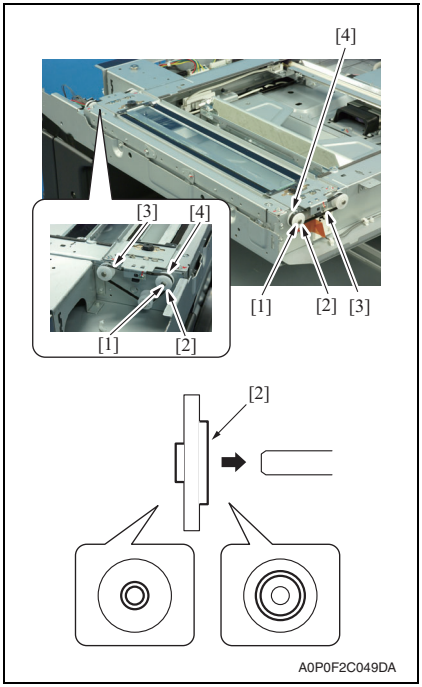

7. Remove the C-ring [1] and the collar [2] one each, and remove the belts [3] of both sides of the original glass mounting unit out of the gear [4].

NOTE

- **Be sure the direction of the collar [2] to be as shown in the left illustration when mounting it.**

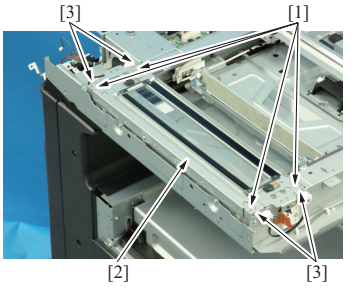

A0P0F2C050DA

8. Remove four screws [1], and remove the original glass moving unit [2].

NOTE

- **Use care not to lose the spacer [3] mounted on each screw.**
- **Write down the type and numbers of the spacer [3].**
  The same numbers of the spacer of the same type with what is written should be mounted when replacing the original glass moving unit.

B. Reinstall procedure

NOTE

- **When replacing the original glass moving unit, clean the glass surface of the original glass moving unit.**
  Clean the inside of the glass well since it cannot be easily cleaned once it is mounted.

1. When mounting the new original glass moving unit, take out the original glass moving unit cover.

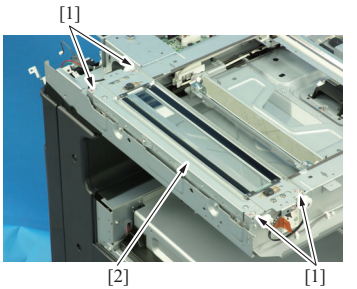

A0P0F2C051DA

2. Set the spacers [1] and mount the original glass moving unit [2] to the machine.

NOTE

- **Make sure to set the spacers [1] which are exact same type and number as before removing the original glass moving unit.**

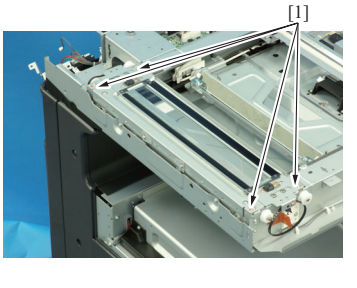

A0P0F2C052DA

3. Tighten four screws [1] loosely and adjust the height of the original glass moving unit.
See P.644

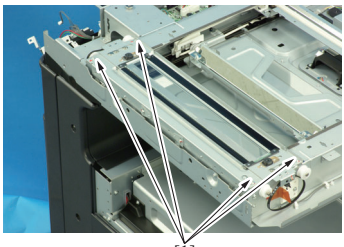

4. Tighten four screws [1] fully.

5. Follow the removing procedures in the opposite steps.
6. Perform the following setting.
   [Service Mode] → [ADF] → [Read Pos Adj]
   See P.593

5.5.38 Glass step sheet

A. Removal procedure

1. Remove the scanner left cover.
   See P.87

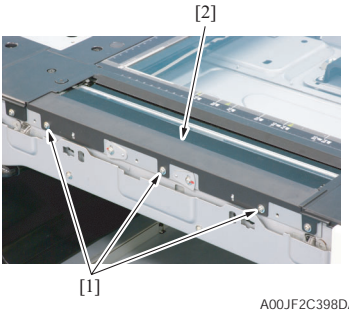

2. Remove three screws [1], and remove the glass step sheet [2].

B. Reinstall procedure

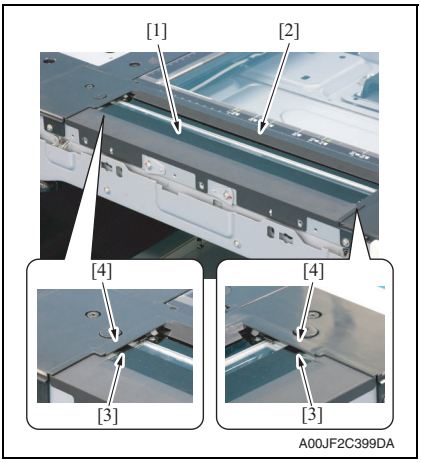

1. Mount the glass step sheet [1] to the original glass moving unit [2].

NOTE

- **Set the sheet [3] under the cover of the original glass moving unit [4].**
- **Use care not to bend the edge of the glass step sheet.**

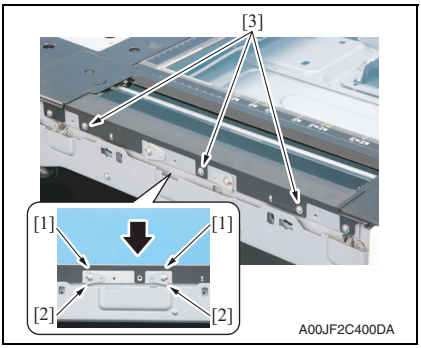

2. Set the points [1] of the glass step sheet to the edge of the scale plate on the original glass moving unit [2], and mount it with three screws [3].

3. Perform the following setting.
[Service Mode] → [ADF] → [Read Pos Adj]
See P.593

5.5.39 Exposure unit

A. Removal procedure

1. Remove the original glass.
See P.89

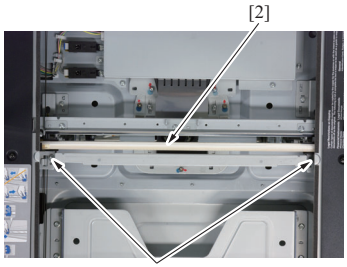

2. Remove two screws [1], and remove the exposure unit [2].

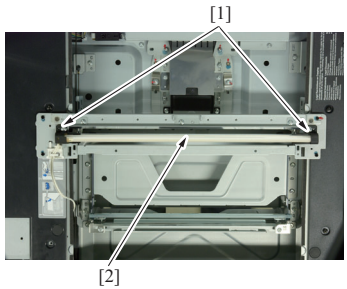

3. Remove two screws [1], and remove the exposure lamp [2] from the exposure unit.

B. Reinstall procedure

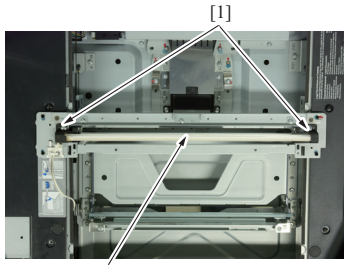

1. Fix the exposure lamp [2] to the exposure unit with the two screws [1].

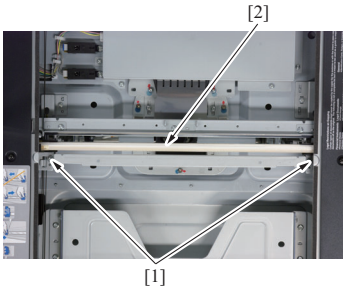

A0P0F2C054DA

2. Tighten the exposure unit [2] with the two screws [1] temporarily.

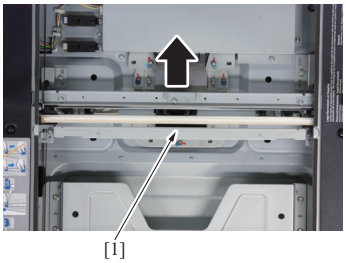

A0P0F2C056DA

3. Move the exposure unit [1] and the mirror unit to the end of the right.

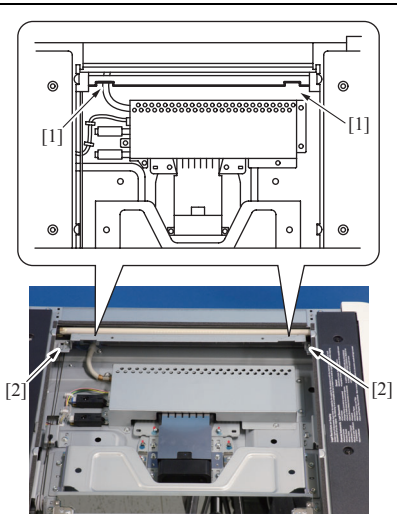

A0P0F2C057DA

4. Slide the exposure unit until it hits the end of the scanner right frame.
5. Provide the length of 21.0 mm between the end of the left indentation [1] on the exposure unit upper surface and the end of the scanner right frame upper surface. When the length is ensured, tighten the two screws [2].

6. Perform the following setting. [Service Mode] → [ADF] → [Read Pos Adj]
See P.593

5.5.40 Hard disk

1. Remove the upper rear cover/1.
See P.92

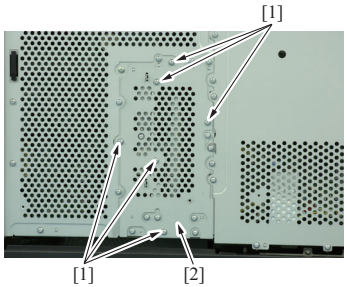

2. Remove six screws [1], and remove the cover [2].

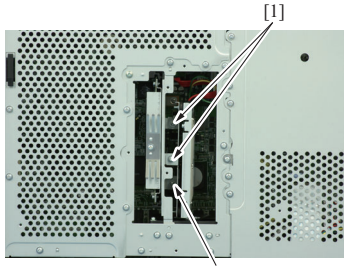

3. Remove three screws [1] of the hard disk drive assy.

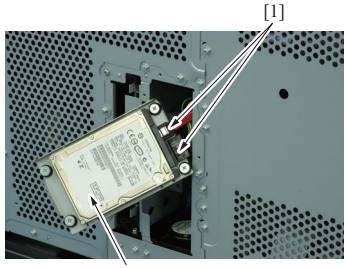

4. Disconnect two connectors [1], and remove the hard disk drive assy [2].

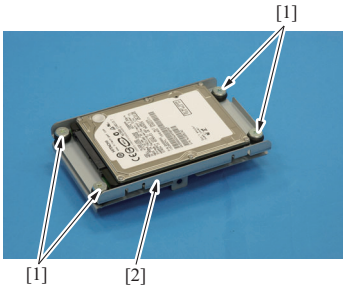

5. Remove four screws [1], and remove the metal plate [2].

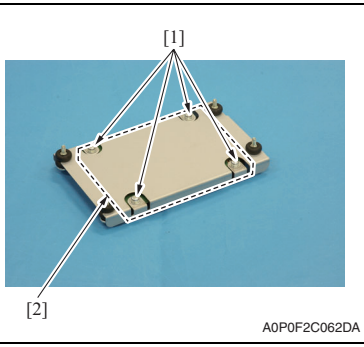

6. Remove four screws [1], and remove the hard disk drive [2].

7. To reinstall, reverse the order of removal.

NOTE

- **When the hard disk is replaced, select [State Confirmation] → [Memory/HDD Adj.] → [HDD Format] in Service Mode for logical format.**

5.5.41 IH coil (FH1)

Warning

- **Tighten the screws of the lead wire terminal of the IH power supply fully to the direction specified.**
  The terminal leakage may cause fire.

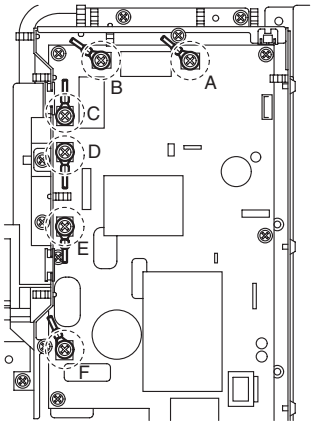

A00JF2C460DA

A: The harness with the longest green color (bizhub C652) or blue color (bizhub C552) is installed with the M4 screw.
B: The harness with green color (bizhub C652) or blue color (bizhub C552) is installed with the M4 screw.
C: The harness with green color is installed with the M3 screw. (bizhub C652 only)
C: The harness with green color is installed with the M3 screw. (bizhub C652 only)
E: The harness with black (100 V areas) / gray (200 V areas) color is installed with the M4 screw. (Either harness can be connected with terminal E and F.)
F: The harness with black (100 V areas) / gray (200 V areas) color is installed with the M4 screw. (Either harness can be connected with terminal E and F.)

1. Remove the fusing unit.
   See P.71
2. Remove the paper exit rear cover.
   See P.84
3. Remove the IH power supply protective shield.
   See the steps 1 to 12 of IH power supply removing procedure.
   See P.149

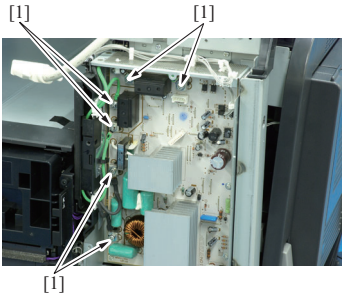

A0P0F2C141DA

4. Remove six screws [1] and remove the terminals of each harness.

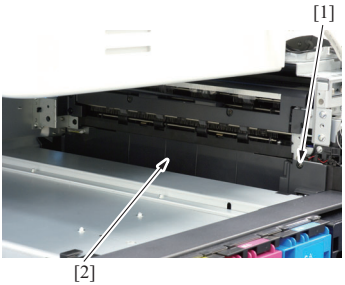

A0P0F2C063DA

5. Remove the screw [1], and remove the exit tray right cover [2].

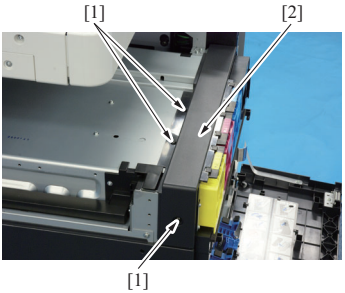

A0P0F2C064DA

6. Remove three screws [1], and remove the exit tray front cover [2].

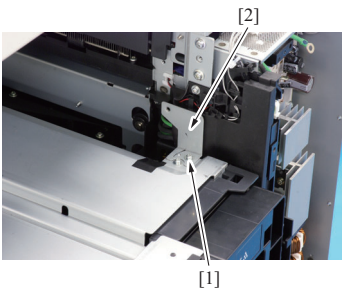

A0P0F2C065DA

7. Remove the screw [1], and remove the metal plate [2].

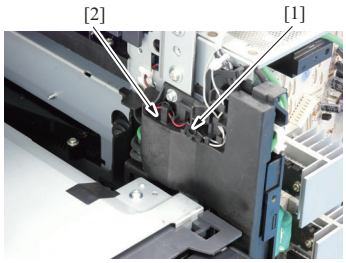

A0P0F2C066DA

8. Disconnect the connector [1], and remove the harness from the harness guide [2].

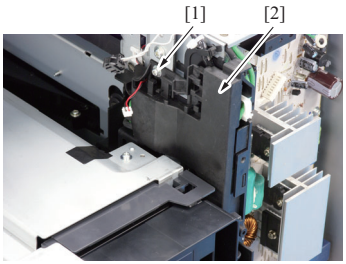

A0P0F2C067DA

9. Remove the screw [1], and remove the harness guide [2].

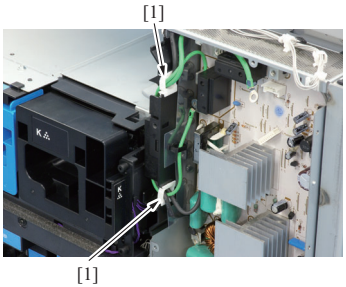

A0P0F2C068DA

10. Remove the harness from two edge covers [1].

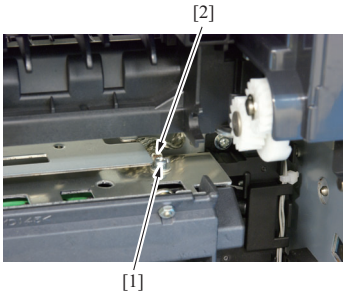

A0P0F2C069DA

11. Remove the screw [1], and remove the ground terminal [2].

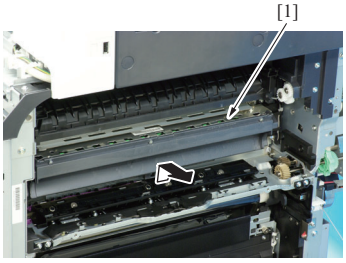

A0P0F2C070DA

12. Remove the fixture of the IH coil [1] as shown in the left illustration.

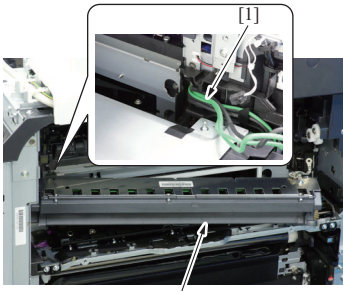

A0P0F2C071DA

13. Removing the harness [1], remove the IH coil [2].

14. To reinstall, reverse the order of removal.

5.5.42 Intermediate transport roller assy

1. Open the manual bypass tray door.
2. Remove the rear right cover /2 and interface cover /2.
See P.91
3. Open the lower right door.

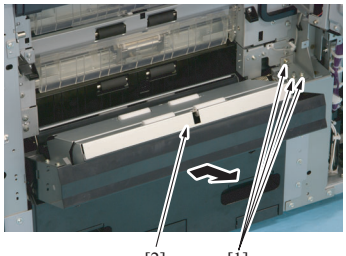

4. Remove three screws [1], and slide the lower right door [2] to the direction as shown in the illustration to remove it.

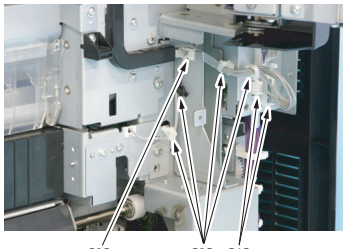

5. Disconnect two connectors [1], and remove the harness from four wire saddles [2] and the edge cover [3].

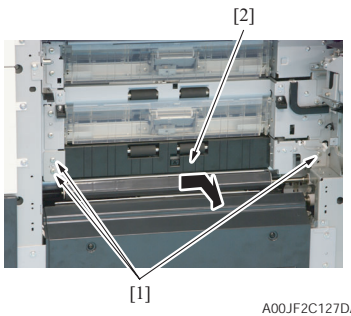

6. Remove three screws [1], and slide the intermediate transport roller assy [2] to the direction as shown in the illustration to remove it.

7. To reinstall, reverse the order of removal.

5.5.43 Main drive unit

1. Remove the fusing unit.
See P.71
2. Remove the transfer belt motor.
See P.166
3. Remove the color PC drum motor.
See P.166
4. Remove the color developing motor.
See P.167
5. Remove the K PC drum motor.
See P.175
6. Remove the K developing motor.
See P.176
7. Remove the service EEPROM board.
See P.141
8. Remove the high voltage unit/2 assy.
See the steps 1 to 17 of cleaner motor removing procedure.
See P.184
9. Remove two harness guides on the high voltage unit/1.
See the steps 12 to 15 of high voltage unit/1 removing procedure.
See P.144

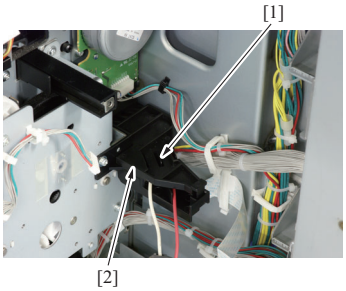

A0P0F2C072DA

10. Unhook the tab [1], and remove the harness guide cover [2].

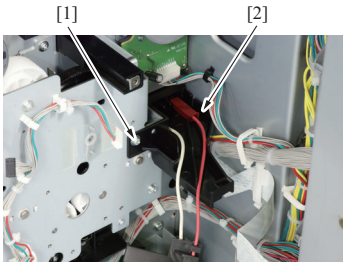

A0P0F2C073DA

11. Remove the screw [1], and remove the harness guide [2].

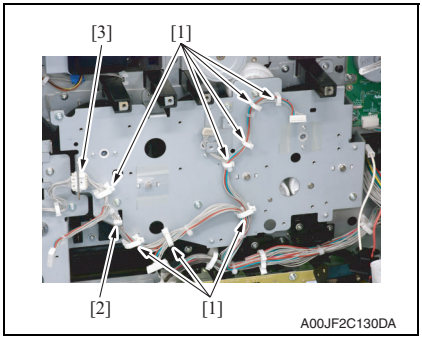

12. Remove the harness from eight wire saddles [1] and the edge cover [2], and disconnect the connector [3].

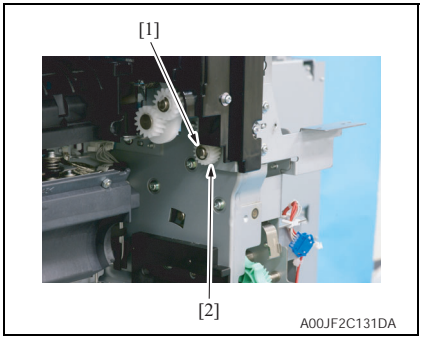

13. Remove the E-ring [1], and remove the gear [2].

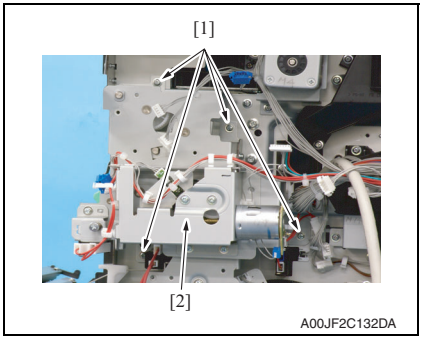

14. Remove four screws [1], and remove the fusing pressure retraction unit [2].

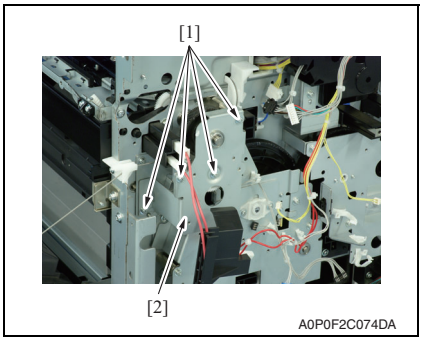

15. Remove four screws [1], and remove the metal plate [2].

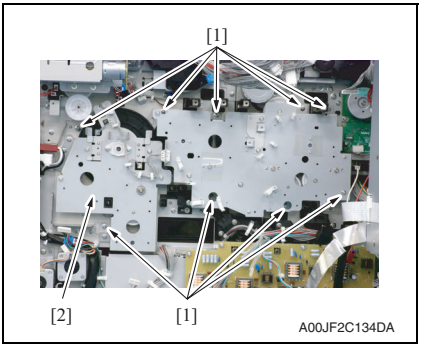

16. Remove nine screws [1], and remove the main drive unit [2].

17. To reinstall, reverse the order of removal.

NOTE

- **When the color PC drum motor is removed to take out the main drive unit, make sure to adjust the positioning of the PC drive gear when mounting the color PC drum motor.**
  See P.654

5.5.44 LCC drive unit

1. Slide out the tray 4.
2. Remove the paper feed/transport drive board assy.
   See the steps 1 to 9 of high voltage unit/1 removing procedure.
   See P.144
3. Remove the intermediate transport roller assy.
   See P.115

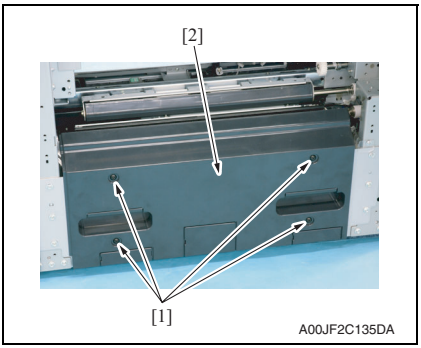

4. Remove four screws [1], and remove the lower right cover [2].

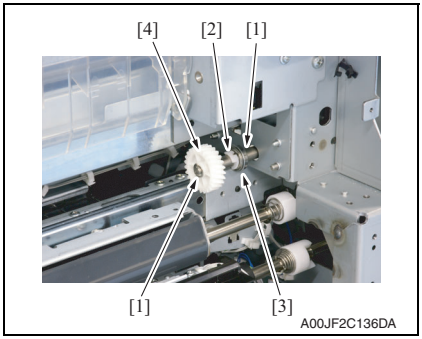

5. Remove two E-rings [1], the C-clip [2], the bearing [3] and the gear [4].

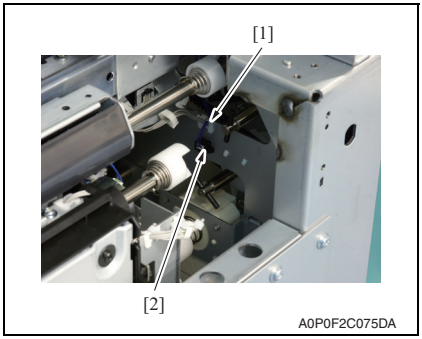

6. Disconnect the connector [2], and remove the harness from the edge cover [1].

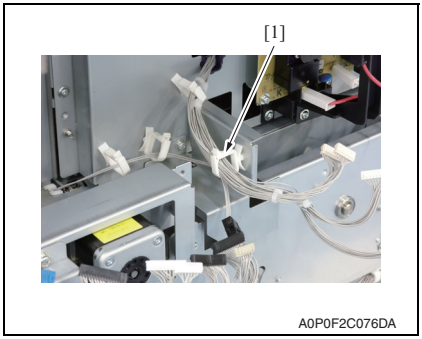

7. Remove the harness from the wire saddle [1].

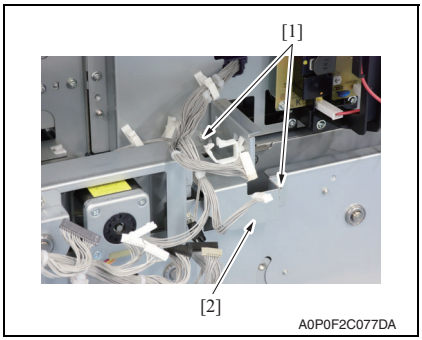

8. Remove two screws [1], and remove the metal plate [2].

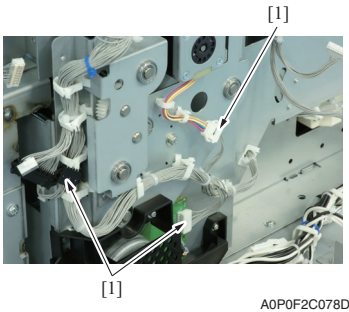

9. Disconnect three connectors [1].

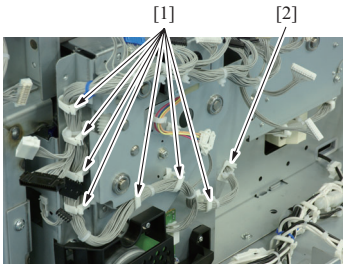

10. Remove the harness from seven wire saddles [1] and edge cover [2].

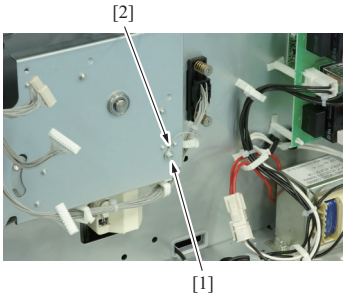

11. Remove the screw [1], and remove the ground terminal [2].

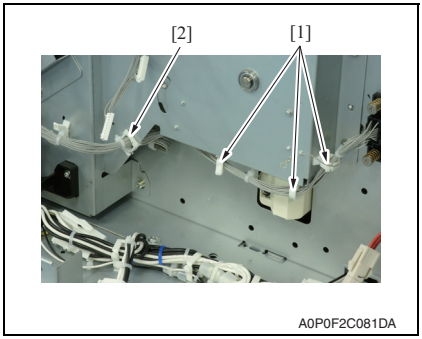

12. Remove the harness from three wire saddles [1] and edge cover [2].

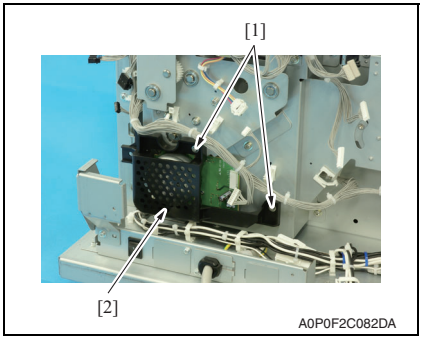

13. Remove two screws [1], and remove the cover [2].

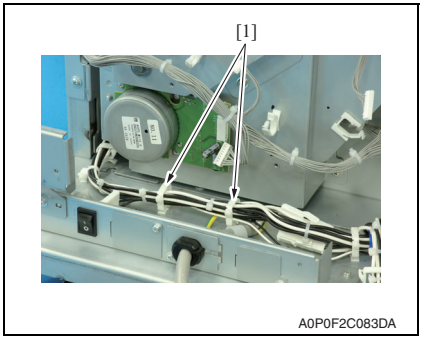

14. Remove the harness from two wire saddles [1].

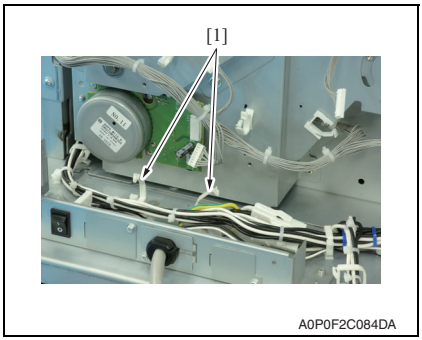

15. Remove two wire saddles [1].

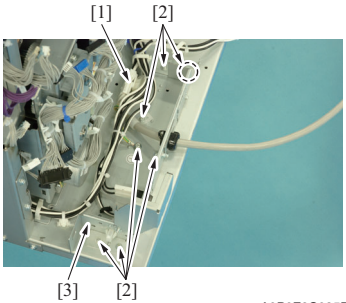

16. Disconnect the connector [1].
17. Remove seven screws [2], and remove the power supply code unit [3].

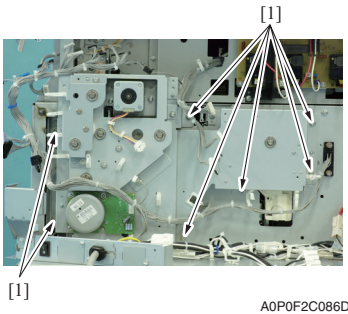

18. Remove seven screws [1] of the LCC drive unit.

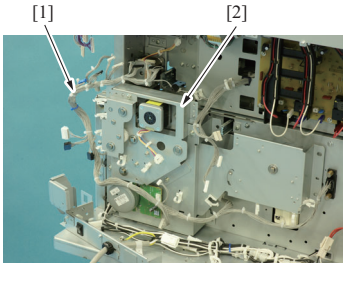

19. Remove the LCC drive unit [2] clearing the harness [1].

20. To reinstall, reverse the order of removal.

5.5.45 Scanner chassis

1. Remove the scanner left cover.
See P.87
2. Remove the scanner front cover.
See P.88
3. Remove the scanner right cover.
See P.85
4. Remove the scanner rear cover.
See P.85
5. Remove the scanner upper rear cover /1 and the scanner upper rear cover /2.
See P.86
6. Remove the upper rear cover /1 and the upper rear cover /2.
See P.92
7. Remove the original glass.
See P.89

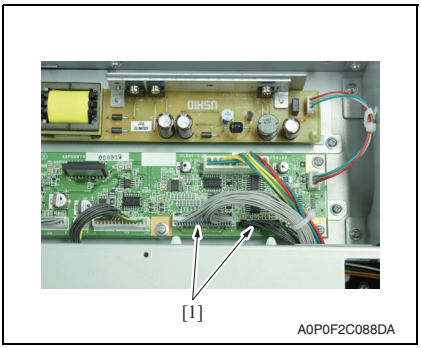

8. Disconnect two connectors [1] on the scanner relay board.

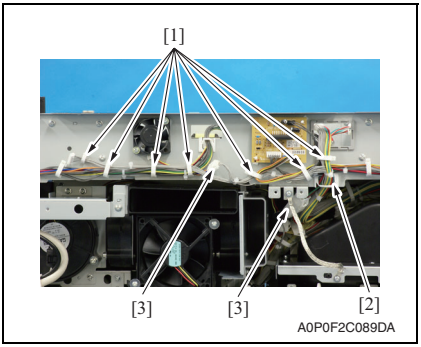

9. Disconnect two connectors [3], and remove the harness from seven wire saddles [1] and the edge cover [2].

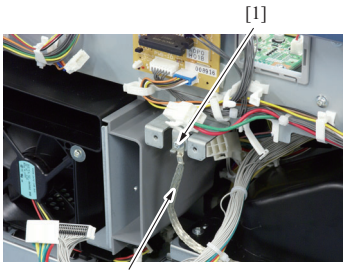

A0P0F2C090DA

10. Remove the screw [1], and remove the ground terminal [2].

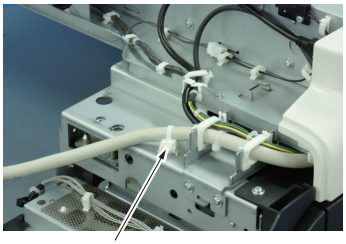

A0P0F2C091DA

11. Remove the cable holder [1].

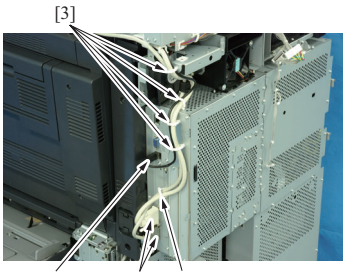

A0P0F2C092DA

12. Disconnect two connectors [1] and the USB connector [2].
13. Remove the harness from five wire saddles [3].

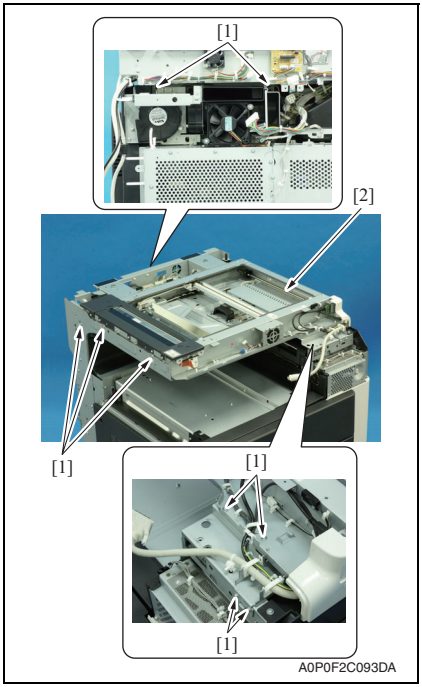

14. Remove nine screws [1], and remove scanner chassis [2].

15. To reinstall, reverse the order of removal.

5.5.46 Scanner relay board (REYB/SCAN)

1. Remove the scanner upper rear cover/1.
See P.86

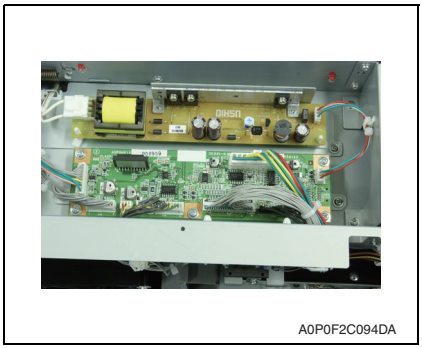

2. Disconnect all connectors on the scanner relay board.

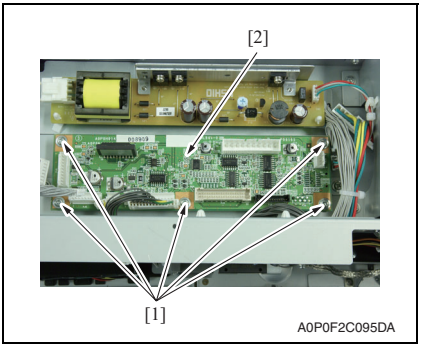

3. Remove five screws [1], and remove the scanner relay board [2].

4. To reinstall, reverse the order of removal.

5.5.47 Original glass position control board (OGPCB)

1. Remove the scanner rear cover.
See P.85

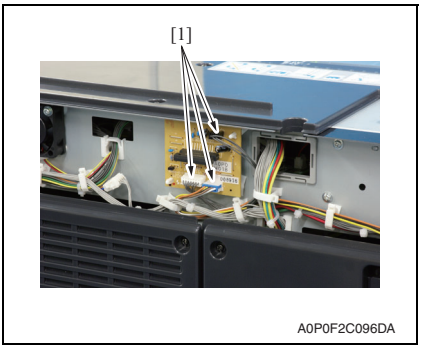

2. Disconnect three connectors [1].

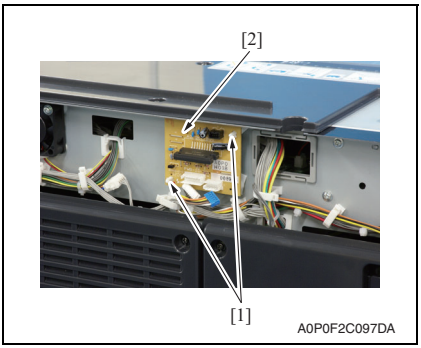

3. Remove two PWB support [1], and remove the original glass position control board [2].

4. To reinstall, reverse the order of removal.

5.5.48 Inverter board (INVB)

1. Remove the scanner upper rear cover/1. See P.92

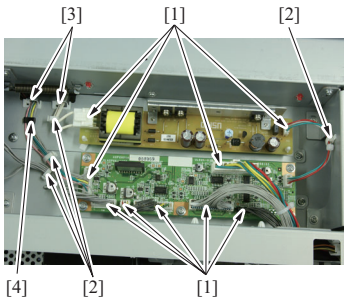

2. Disconnect nine connectors [1].
3. Remove the harnesses from four wire saddles [2], two edge covers [3] and the harness holder [4].

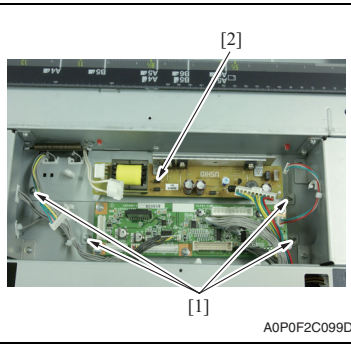

4. Remove four screws [1], and remove the Inverter board assy [2].

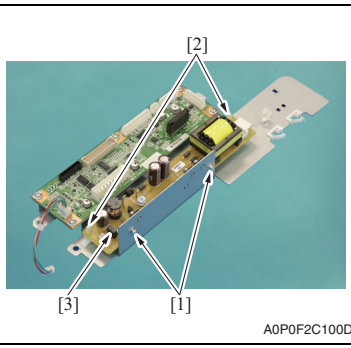

5. Remove two screws [1] and two PWB supports [2], and remove the inverter board [3].

6. To reinstall, reverse the order of removal.

5.5.49 PH relay board (REYB/PH)

1. Remove the upper left cover.
See P.83
2. Remove the lower left cover.
See P.83

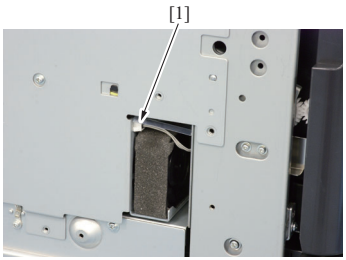

A0P0F2C039DA

3. Disconnect the connector [1].

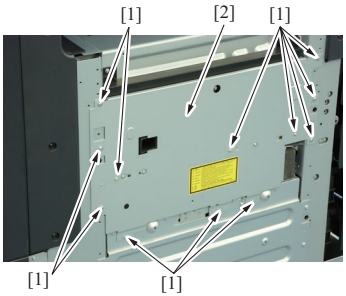

A0P0F2C038DA

4. Remove twelve screws [1], and remove the PH unit protective shield [2].

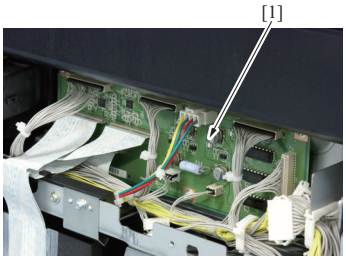

A0P0F2C101DA

5. Remove all the connectors and flat cables on the PH relay board [1].

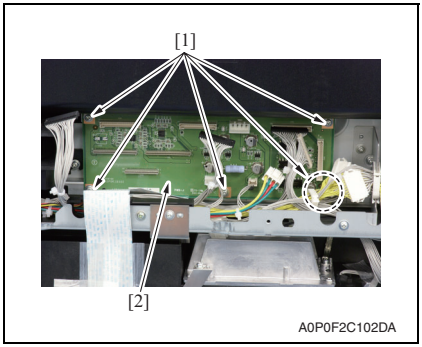

6. Remove five screws [1], and remove the PH relay board [2].

7. To reinstall, reverse the order of removal.

5.5.50 Paper feed/transport drive board (PFTDB)

1. Remove the lower rear cover.
See P.93
2. Remove the rear right cover /2.
See P.91

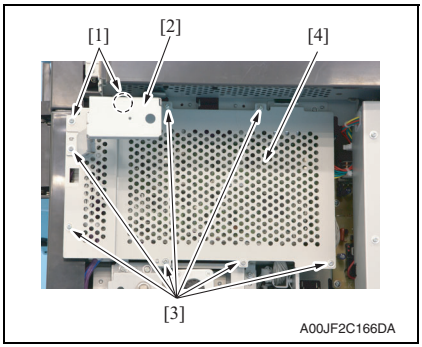

3. Remove two screws [1], and remove the metal plate [2].
4. Remove seven screws [3], and remove the paper feed/transport drive board protective shield [4].

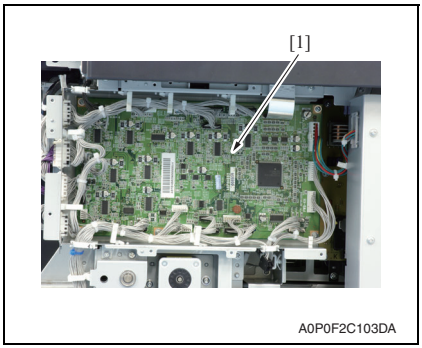

5. Remove all the connectors and flat cables on the paper feed/transport drive board [1].

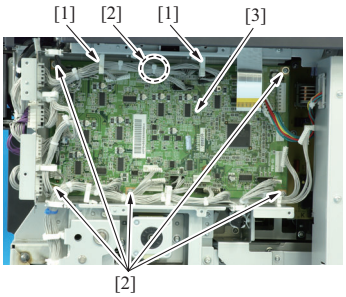

6. Remove two wire saddles [1].
7. Remove six screws [2], and remove the paper feed/transport drive board [3].

8. To reinstall, reverse the order of removal.

5.5.51 DC power supply (DCPU)

1. Remove the lower rear cover.
See P.93
2. Remove the rear right cover /2.
See P.91
3. Remove the lower left cover.
See P.83

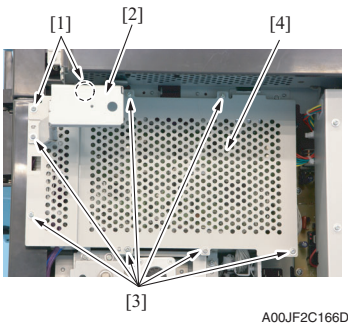

4. Remove two screws [1], and remove the metal plate [2].
5. Remove seven screws [3], and remove the paper feed/transport drive board protective shield [4].

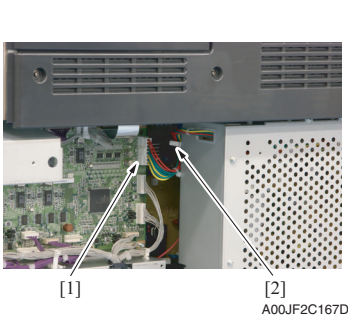

6. Disconnect the connector [1], and remove the harness from the wire saddle [2].

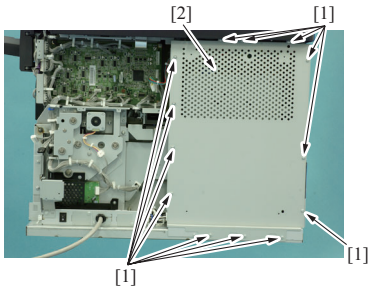

A0P0F2C105DA

7. Remove thirteen screws [1], and remove the DC power supply protective shield/1 [2].

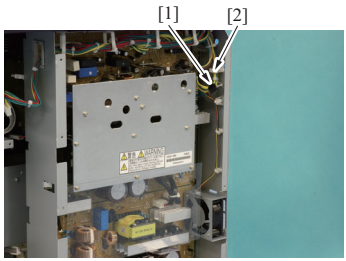

A0P0F2C106DA

8. Disconnect the connector [1] of the power supply cooling fan motor.
9. Remove the harness from the wire saddle [2].

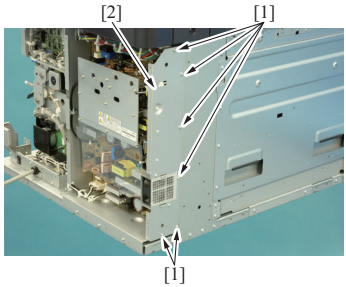

A0P0F2C107DA

10. Remove six screws [1], and remove the DC power supply protective shield/2 [2].

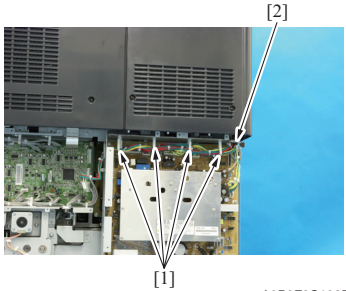

A0P0F2C108DA

11. Remove the harness from four wire saddles [1] and the edge cover [2].

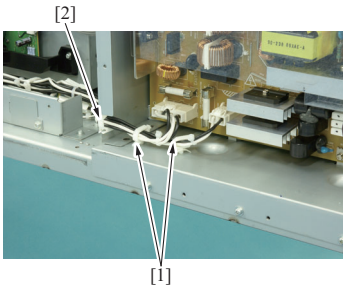

12. Remove the harness from two wire saddles [1] and the edge cover [2].

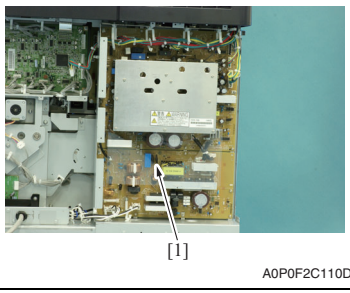

13. Remove all the connectors on the DC power supply [1].

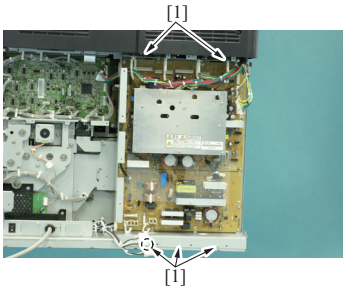

14. Remove five screws [1].

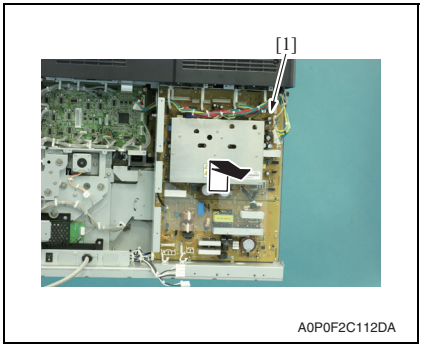

15. Clearing the harness, hold up the DC power supply [1] to remove it.

16. To reinstall, reverse the order of removal.

5.5.52 Relay drive board (REDB)

1. Remove the DC power supply.
See P.130

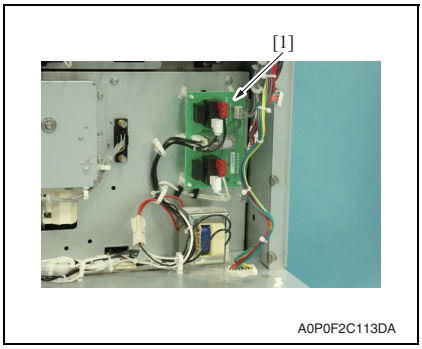

2. Remove all the connectors from the relay drive board [1].

NOTE

- **For reinstallation, position the connectors so that the harness hangs down from the connectors.**

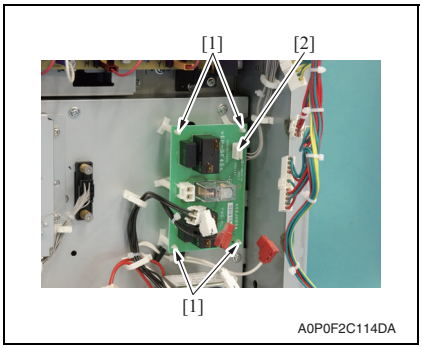

3. Remove four PWB supports [1], and remove the relay drive board [2].

4. To reinstall, reverse the order of removal.

5.5.53 Printer control board (PRCB)

1. Remove the upper rear cover /1 and the upper rear cover /2.
See P.92

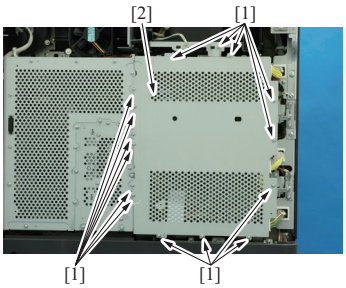

A0P0F2C115DA

2. Remove fifteen screws [1], and remove the printer control board protective shield [2].

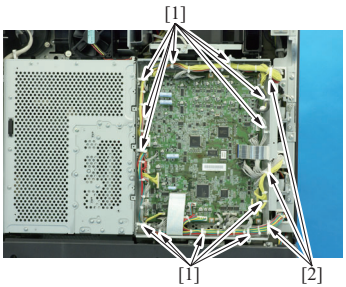

A0P0F2C116DA

3. Remove the harness from twelve wire saddles [1] and three edge covers [2].

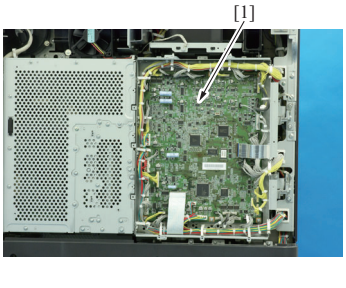

A0P0F2C117DA

4. Remove all the connectors on the printer control board [1].

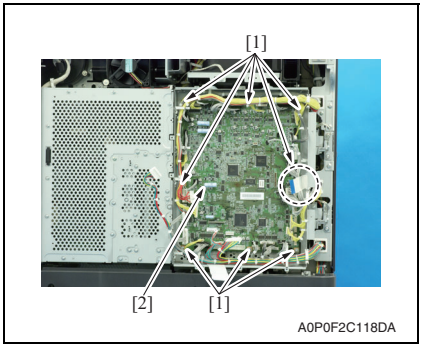

5. Remove eight screws [1], and remove the printer control board [2].
6. To reinstall, reverse the order of removal.

NOTE

- **When the printer control board is to be replaced, rewriting the firmware to the latest one.**

5.5.54 How to open PWB box/1

1. Remove the upper rear cover /2.
See P.92
2. Remove the rear right cover /1.
See P.91

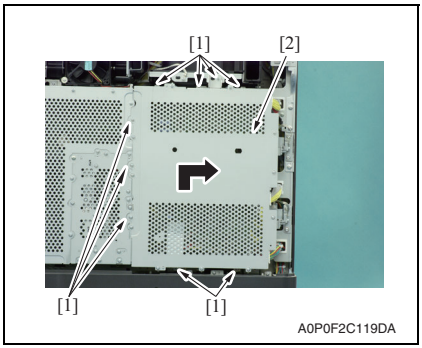

3. Remove nine screws [1], and move the PWB box/1 [2] up to remove it.

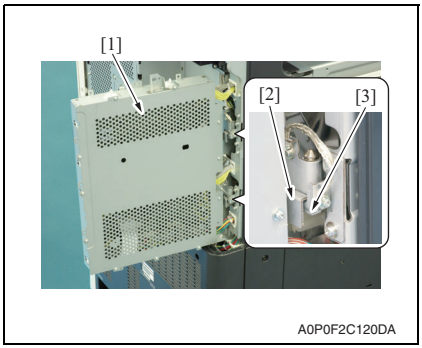

4. Open the PWB box/1 [1] to the direction shown on the left and set two fingers [2] to the hook [3] on the frame of the main unit.

5.5.55 PCI board (PCIB)

1. Remove the rear right cover /1.
See P.91

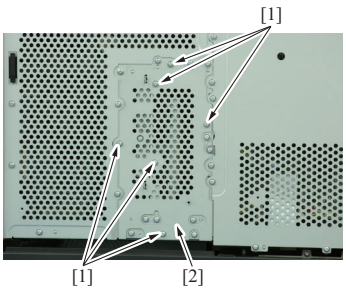

2. Remove six screws [1], and remove the cover [2].

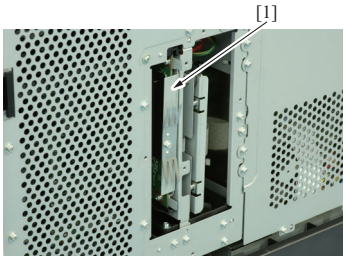

3. Slide out the PCI board assy [1].

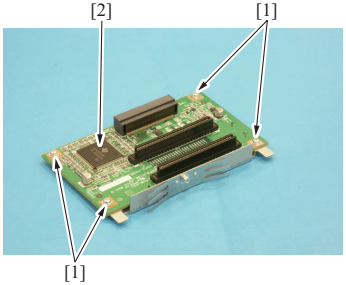

4. Remove four screws [1], and remove the PCI board [2].

5. To reinstall, reverse the order of removal.

5.5.56 MFP board (MFPB)

1. Remove the hard disk drive assy.
See P.109
2. Remove the PCI board assy.
See P.136

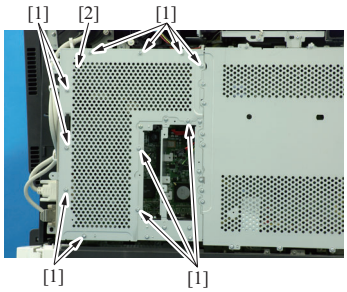

3. Remove eleven screws [1], and remove the MFP board protective shield [2].

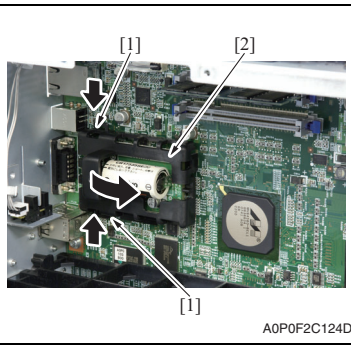

4. Unhook two tabs [1], and remove the NVRAM board assy [2] on the MFP board.

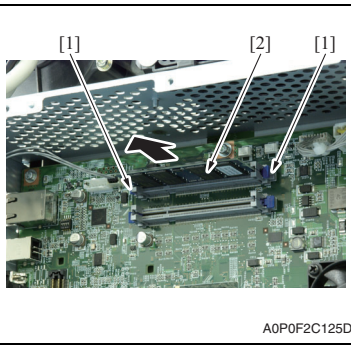

5. Unlock two lock levers [1], and remove the memory board [2] on the MFP board.

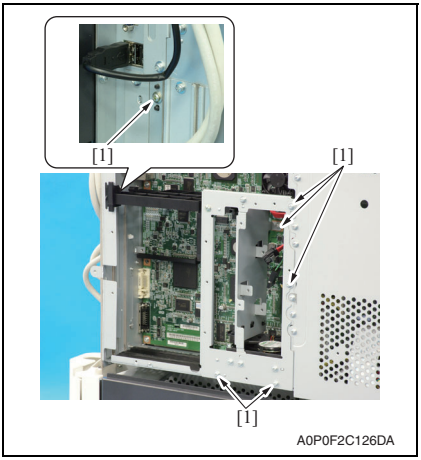

6. Remove six screws [1] of the MFP control board cooling fan motor assy.

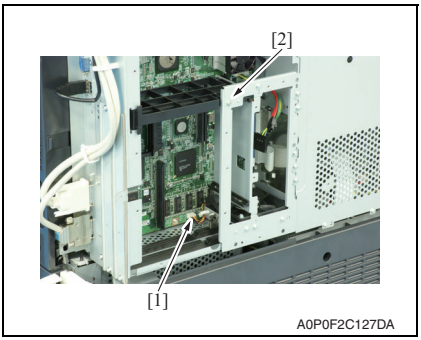

7. Disconnect the connector [1], and remove the MFP control board cooling fan motor assy [2].

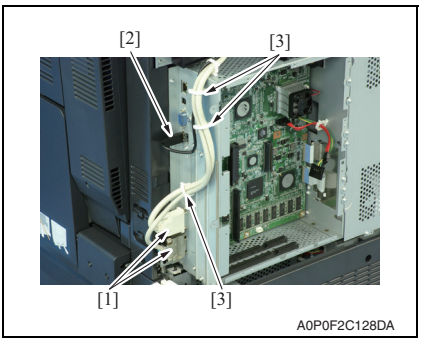

8. Disconnect two connectors [1] and the USB connector [2].
9. Remove the harnesses from three wire saddles [3].

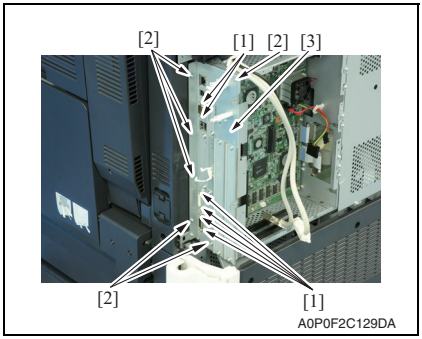

10. Remove six bolts [1] and six screws [2], and remove the port bracket [3].

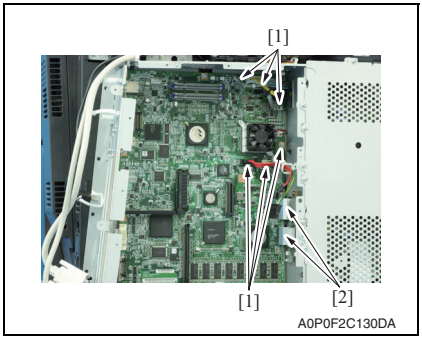

11. Disconnect six connectors [1] and two flat cables [2].

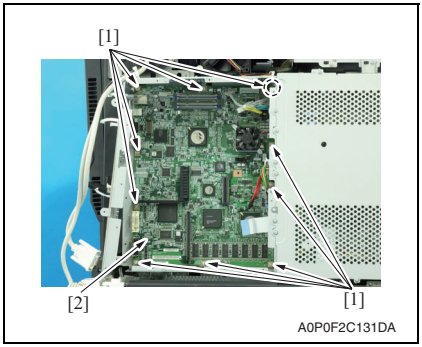

12. Remove ten screws [1], and remove the MFP board [2].

13. To reinstall, reverse the order of removal.

NOTE

- **When the MFP board is to be replaced, rewriting the firmware to the latest one.**

5.5.57 How to open PWB box/2

1. Remove the upper rear cover /2.
See P.92
2. Remove the rear right cover /1.
See P.91

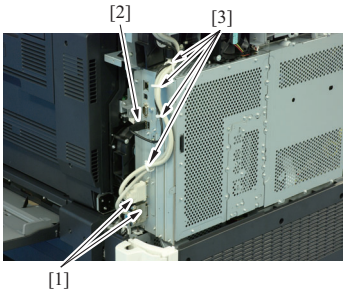

3. Disconnect two connectors [1] and USB connector [2].
4. Remove the harnesses from four wire saddles [3].

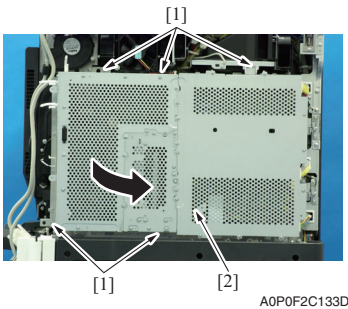

5. Remove five screws [1] and open the PWB box/2 [2].

5.5.58 High voltage unit/2 (HV2)

1. Open the PWB box/2.
See P.140

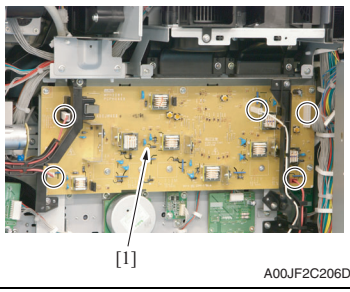

2. Remove all the connectors on the high voltage unit/2 [1].

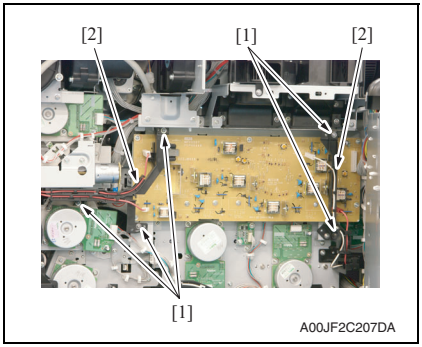

3. Remove five screws [1], and remove two harness guides [2].

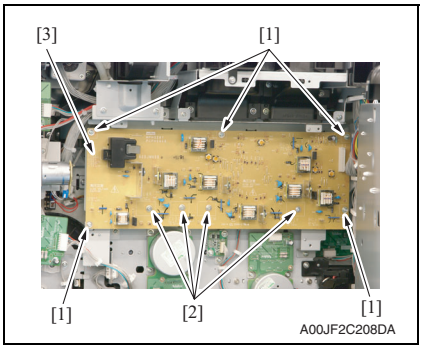

4. Remove five screws [1] and four tapping screws [2], and remove the high voltage unit/2 [3].

5. To reinstall, reverse the order of removal.

5.5.59 Service EEPROM board (SV ERB)

1. Open the PWB box/2.
See P.140

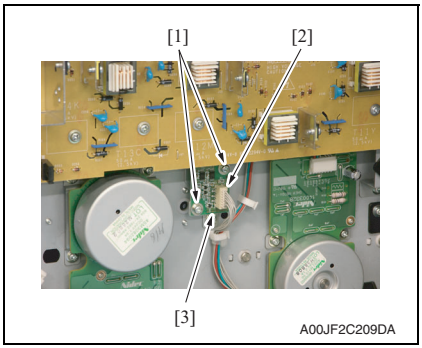

2. Remove two screws [1] and the connector [2], and take out the service EEPROM board [3].

3. To reinstall, reverse the order of removal.

NOTE

After replacing the service EEPROM board, all parts shown below are required to be replaced with new ones.

- **Imaging unit Y/M/C/K**
- **Toner cartridge Y/M/C/K**
- **Waste toner box**
- **Image transfer belt**
- **Fusing unit**
- **Ozone filter**

NOTE

- **When service EEPROM is replaced, data of all adjustment settings stored in EEPROM disappear and the adjustment settings are returned to the default ones. After replacing the service EEPROM board, take the following steps to make readjustments.**

4. Open the upper front door and turn OFF and ON the main power switch and sub power switch.

5. Enter the Service Mode. Make individual adjustments shown in the following table in the order listed, using the machine maintenance list and the adjustment lists that were output at the time of main body installation and maintenance.

Order	Items that require readjustment in the Service mode			Ref. page
1	Machine	Skew adjustment	Skew adjustment	P.477
2		LD adjustment	LD delay adjust.	P.478
3		Color Registration Adjustment		P.476
4	Imaging Process Adjustment	TCR Level Setting		P.485
5		Background Voltage Margin		P.485
6		D Max Density		P.484
7		Development AC Voltage Choice		P.490

NOTE

- **After replacing the service EEPROM board, be sure to make the above listed adjustments before the first warm-up is made.**

6. Turn OFF the main power switch and sub power switch.

7. Close the upper front door and turn ON the main power switch and sub power switch. Check to see that warm-up and image stabilization operations are completed normally.

8. Enter the Service mode again. Make individual adjustments shown in the following table in the order listed, using the machine management list and the adjustment lists that were output at the time of main body installation and maintenance.

Order	Items that require readjustment in the Service mode			Ref. page
1	Machine	LD adjustment	LD lightness balance adjust.	P.479
2		Manual Bypass Tray Adjustment		P.480
3	Finisher	FS-FN adjustment		P.597
4	Machine	Printer Resist Loop		P.475
5	Imaging Process Adjustment	Thick Paper Density Adjustment		P.488
6		Monochrome Density Adjustment		P.490
7	Machine	Fusing Temperature		P.462
8	Imaging Process Adjustment	Transfer Belt	Auto Cleaning	P.484
9	Machine	Thick Paper Mode		P.480
10	Imaging Process Adjustment	Transfer Belt	Cleaning Bias	P.483
11	System 1	Charging CH cleaning	Cleaning	P.528
12	Machine	Printer Area	Paper Feed Direction Adj.	P.469
13	In this step, pull out the tray 3 and 4 and slide them in again.			
14	Machine	Fusing Transport Speed		P.463
15		Color alignment Adjustment		P.461
16		Printer Area	Centering	P.466
			Centering (Duplex 2nd Side)	P.468
			Leading Edge Adjustment	P.465
			Leading Edge Adj. (Duplex Side 2)	P.467
17	Imaging Process Adjustment	Transfer Output Fine Adjustment	Secondary transfer adj.	P.486
18			Primary transfer adj.	P.487
19		Paper separation adjustment		P.489

5.5.60 High voltage unit/1 (HV1)

1. Remove the upper rear cove /1, upper rear cover /2 and lower rear cover.
See P.92
2. Remove the rear right cover/1, rear right cover/2, interface cover/1 and interface cover/2.
See P.90
3. Remove the DC power supply.
See P.130
4. Open the PWB box/2.
See P.140

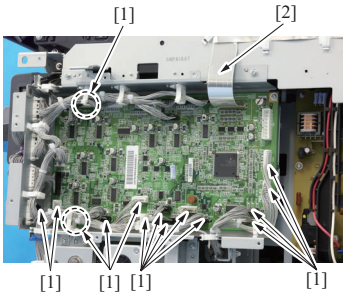

5. Remove fifteen connectors [1] and the flat cable [2] on the paper feed/transport drive board.

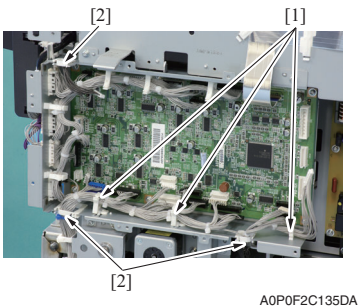

6. Remove the harness from three wire saddles [1] and three edge covers [2].

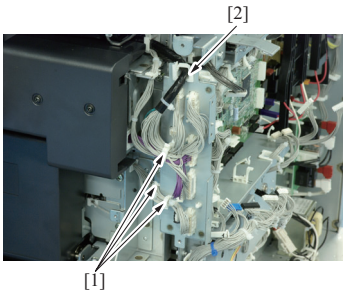

7. Remove the harness from three wire saddles [1] and the edge cover [2].

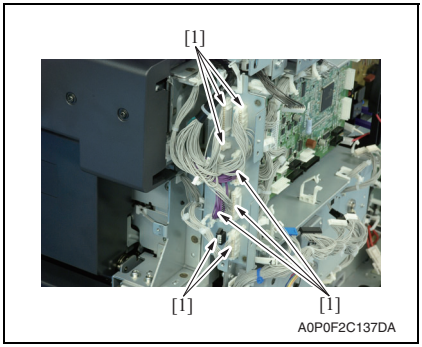

8. Disconnect eight connectors [1].

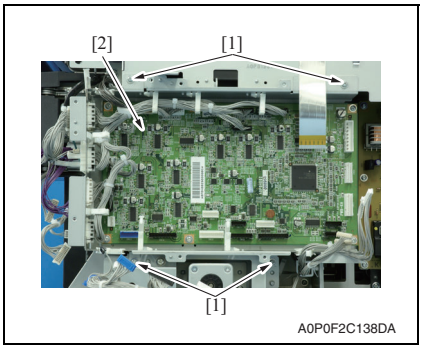

9. Remove four screws [1], and remove the paper feed/transport drive board assy [2].

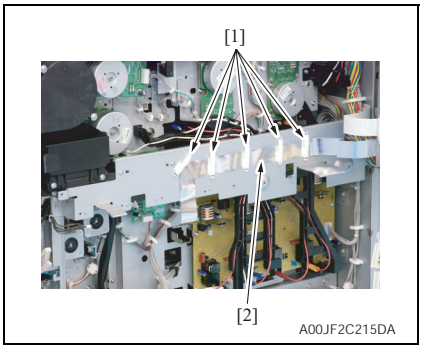

10. Remove five cable holders [1] and clear the flat cables [2].

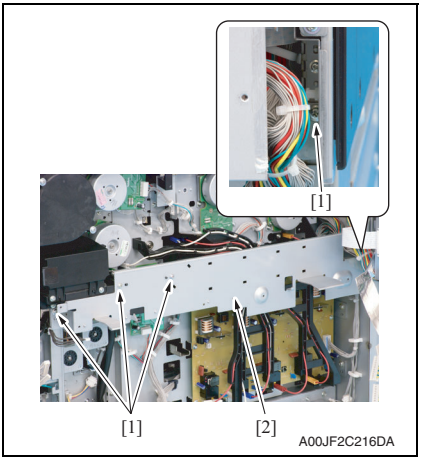

11. Remove four screws [1] and take out the reinforcing plate [2].

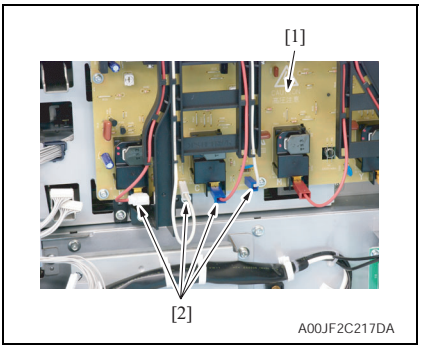

12. Disconnect four connectors [2] on the high voltage unit/1 [1].

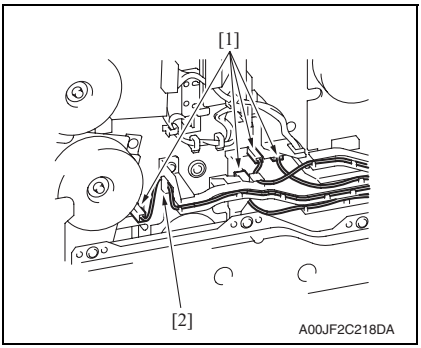

13. Disconnect four connectors [1].

NOTE

- **When reinstalling the connectors, hang the harness [2] on the hook. Be sure to take the slack out of the harness.**

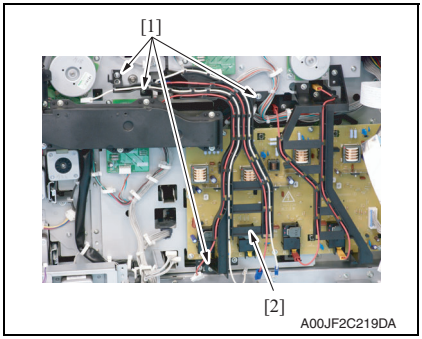

14. Remove four screws [1], and remove the harness guide [2].

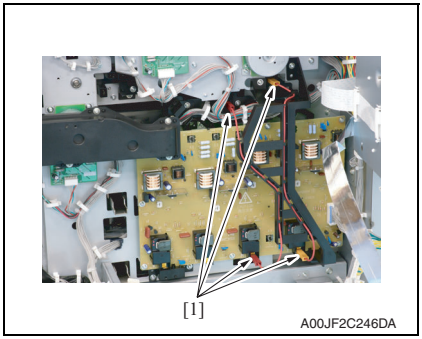

15. Disconnect four connectors [1].

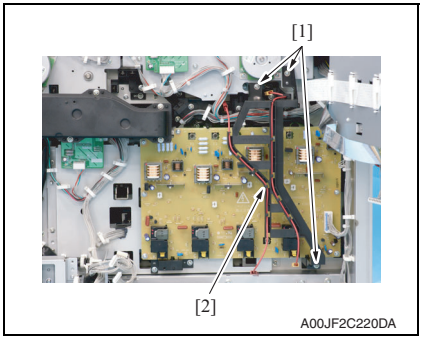

16. Remove three screws [1], and remove the harness guide [2].

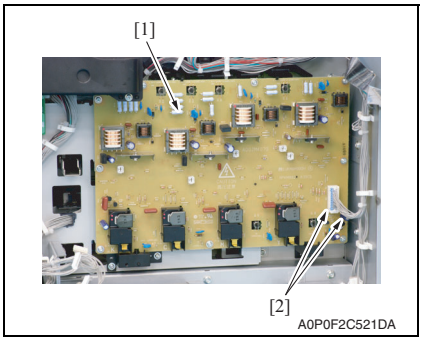

17. Disconnect two connectors [2] on the high voltage unit/1 [1].

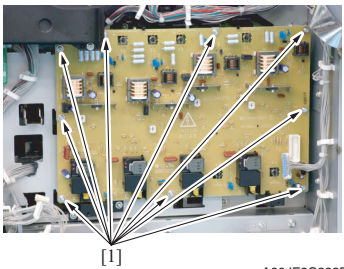

18. Remove nine screws [1].

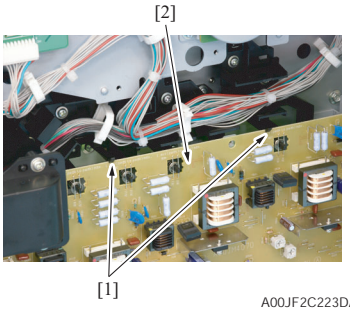

19. Unhook two tabs [1] and remove the high voltage unit/1 [2].

20. To reinstall, reverse the order of removal.

5.5.61 IH power supply (IHPU)

Warning
• **Tighten the screws of the lead wire terminal of the IH power supply fully to the direction specified.** **The terminal leakage may cause fire.**

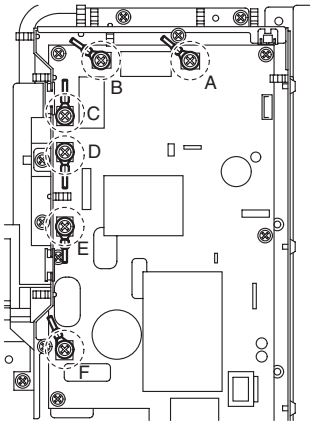

A00JF2C460DA

A: The harness with the longest green color (bizhub C652) or blue color (bizhub C552) is installed with the M4 screw.
B: The harness with green color (bizhub C652) or blue color (bizhub C552) is installed with the M4 screw.
C: The harness with green color is installed with the M3 screw. (bizhub C652 only)
C: The harness with green color is installed with the M3 screw. (bizhub C652 only)
E: The harness with black (100 V areas) / gray (200 V areas) color is installed with the M4 screw. (Either harness can be connected with terminal E and F.)
F: The harness with black (100 V areas) / gray (200 V areas) color is installed with the M4 screw. (Either harness can be connected with terminal E and F.)

1. Remove the upper front cover /1.
See P.80
2. Remove the upper front cover /2.
See P.81
3. Remove the right front cover.
See P.81

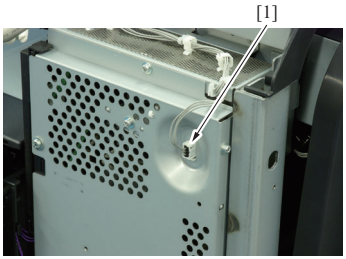

A0P0F2C139DA

4. Disconnect the connector [1].

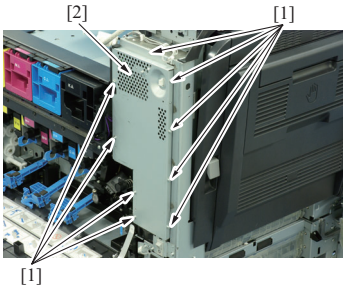

A0P0F2C140DA

5. Remove nine screws [1], and remove the IH power supply protective shield [2].

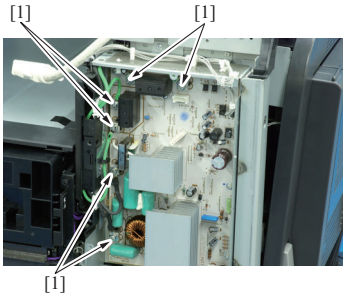

A0P0F2C141DA

6. Remove six screws [1] and remove the terminals of each harness.

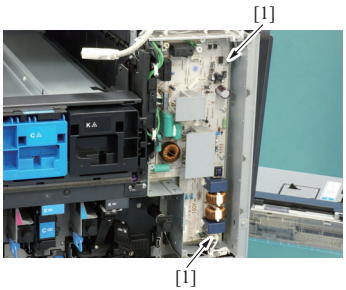

A0P0F2C142DA

7. Disconnect two connectors [1].

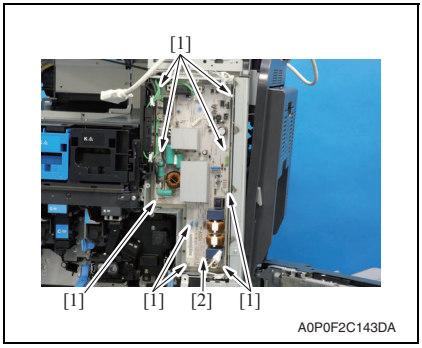

8. Remove nine screws [1], and remove the IH power supply [2].

9. To reinstall, reverse the order of removal.

5.5.62 Paper size detect board/1 (PSDTB/1)

1. Remove the tray1 and tray2.
See P.96

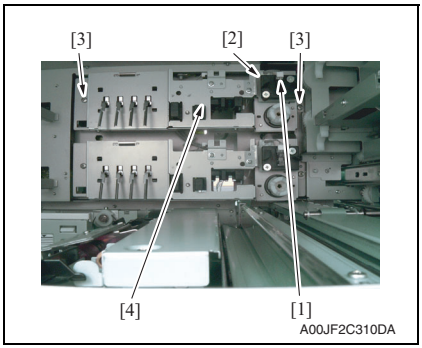

2. Disconnect the connector [1] and remove the harness from the edge cover [2].
3. Remove two screws [3], take out the tray1 lift-up motor assy [4] and turn it around.

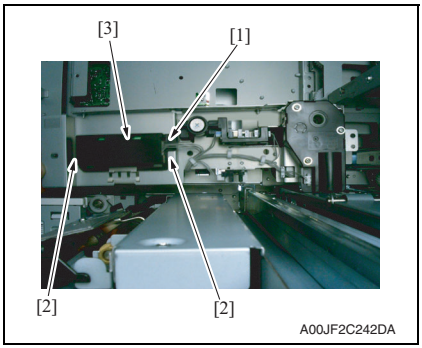

4. Disconnect the connector [1].
5. Unhook two tabs [2] and remove the paper size detect board/1 assy [3].

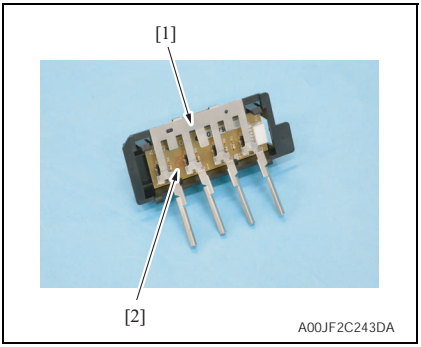

6. Remove the lever [1], and remove the paper size detect board/1 [2].

7. To reinstall, reverse the order of removal.

5.5.63 Paper size detect board/2 (PSDTB/2)

1. Remove the tray1 and tray 2.
See P.96

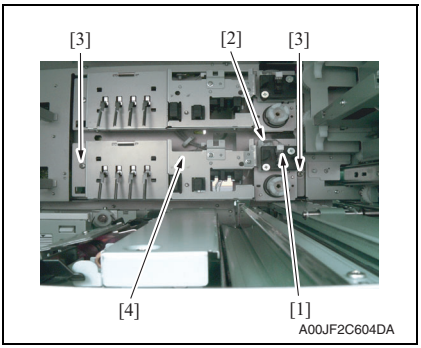

2. Disconnect the connector [1] and remove the harness from the edge cover [2].
3. Remove two screws [3], take out the tray2 lift-up motor assy [4] and turn it around.

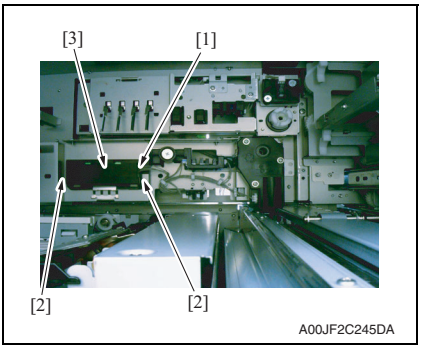

4. Disconnect the connector [1].
5. Unhook the tabs [2] and remove the paper size detect board/2 assy [3].

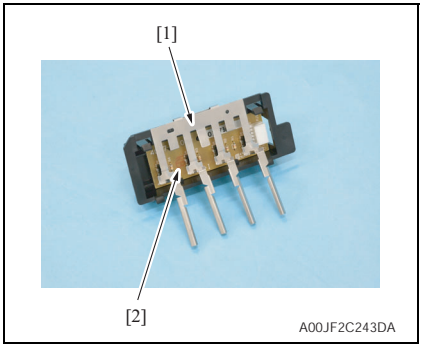

6. Remove the lever [1], and remove the paper size detect board/2 [2].

7. To reinstall, reverse the order of removal.

5.5.64 ADU transport motor/1 (M31)

1. Remove the duplex unit.
See P.99

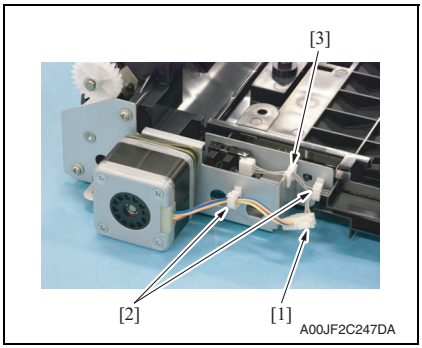

2. Disconnect the connector [1], and remove the harness from two wire saddles [2] and the edge cover [3].

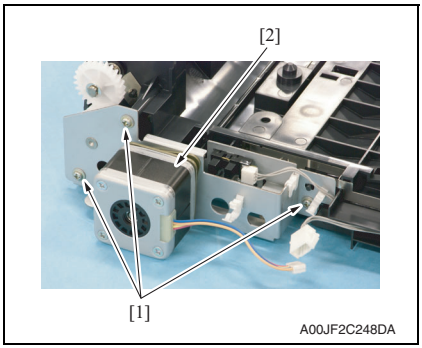

3. Remove three screws [1], and remove the ADU transport motor/1 assy [2].

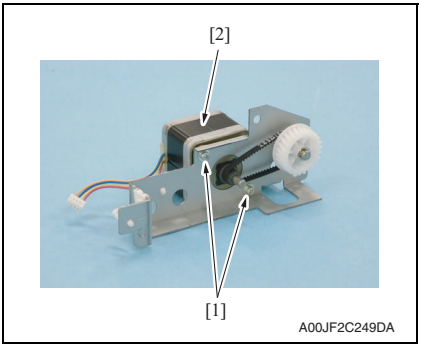

4. Remove two screws [1], and remove the ADU transport motor/1 [2].

5. To reinstall, reverse the order of removal.

5.5.65 ADU transport motor/2 (M32)

1. Remove the duplex unit.
See P.99

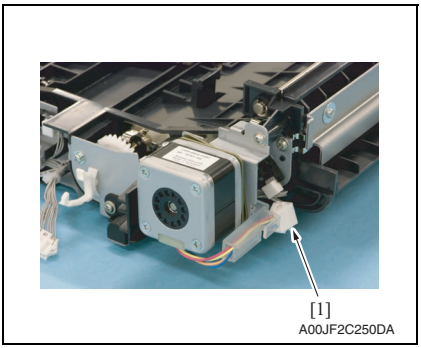

2. Disconnect the connector [1].

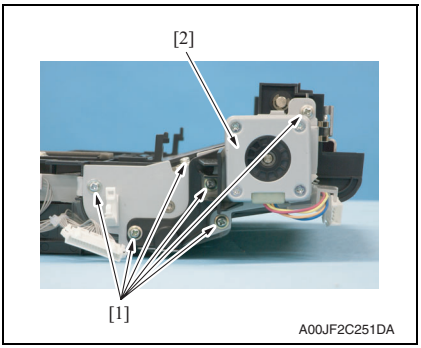

3. Remove six screws [1], and remove the ADU transport motor/2 assy [2].

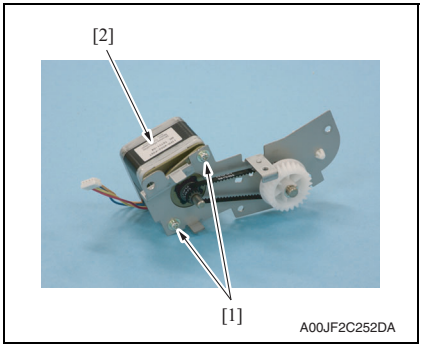

4. Remove two screws [1], and remove the ADU transport motor/2 [2].

5. To reinstall, reverse the order of removal.

5.5.66 Bypass tray up down motor (M28) / bypass paper feed motor (M27)

1. Remove the manual bypass tray unit.
See P.100

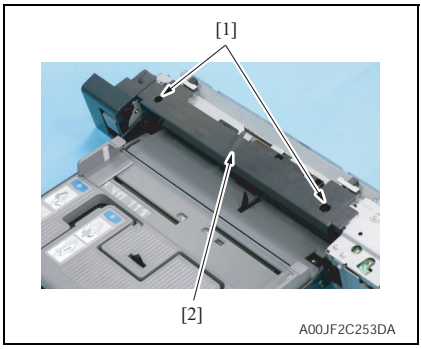

2. Remove two screws [1], and remove the manual bypass tray upper cover [2].

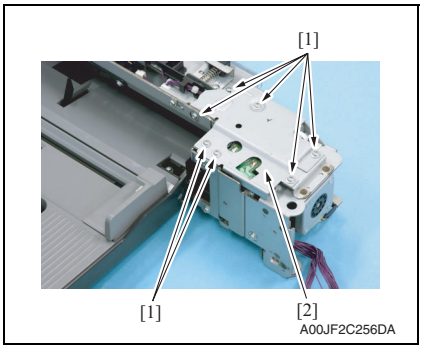

3. Remove seven screws [1], and remove the metal plate [2].

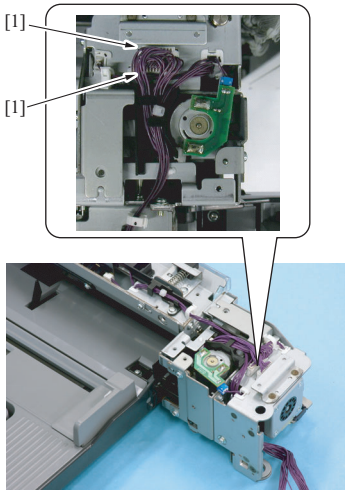

A00JF2C257DA

4. Disconnect two connectors [1].

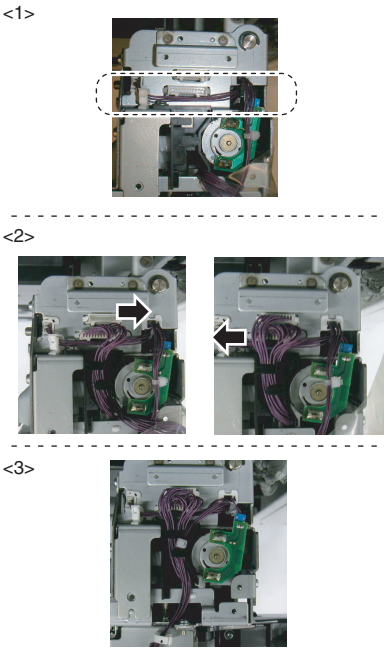

A00JF2C600DA

NOTE

- **When reinstalling the harness and connectors which were removed in step 4, route the harnesses following the procedure shown in the illustrations on the left.**

<1> Fit the harness into the place as shown in the illustration on the left.
<2> Insert the two connectors and route the harness as shown in the illustration on the left.
<3> Secure the harness to the harness guide.

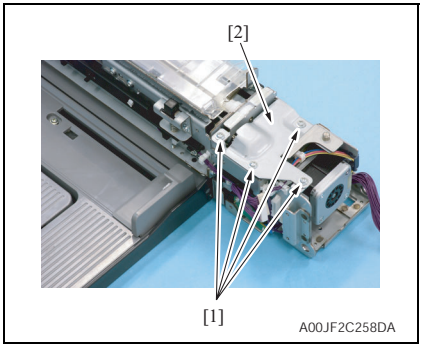

5. Remove four screws [1], and remove the metal plate [2].

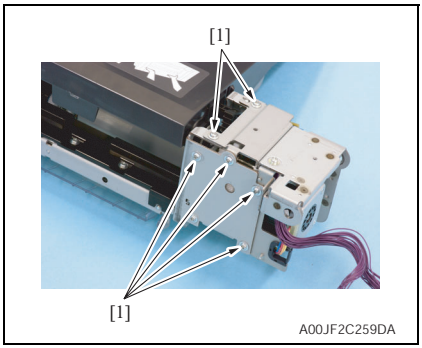

6. Remove six screws [1].

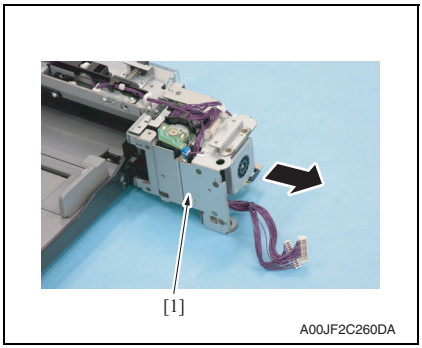

7. Pull the manual bypass tray drive assy [1] to the direction shown as the illustration to remove it.

NOTE

- **Do no pull forcedly as the harness is connected.**

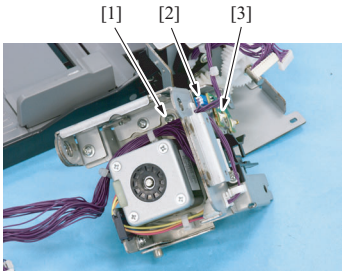

8. Remove the screw [1] and the connector [2], and take out the bypass tray up down motor [3].

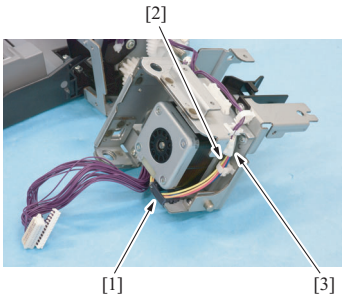

9. Remove the harness from the wire saddle [1] and the edge cover [2].
10. Disconnect the connector [3].

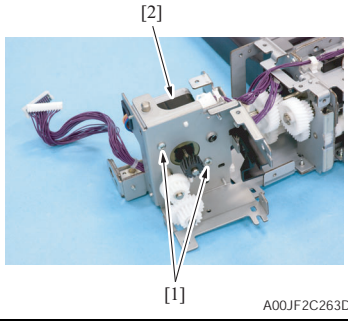

11. Remove two screws [1], and remove the bypass paper feed motor [2].

12. To reinstall, reverse the order of removal.

5.5.67 Scanner motor (M201)

A. Removal procedure

1. Remove the scanner rear cover.
See P.85
2. Remove the scanner upper rear cover /1.
See P.86

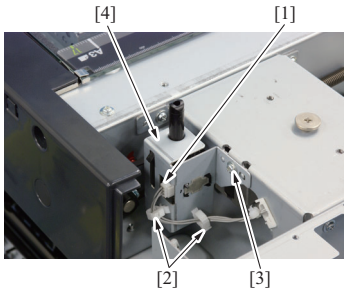

3. Remove the connector [1] and take out the harnesses from two wire saddles [2].
4. Then remove the screw [3] to take out the 15 degree sensor assy [4].

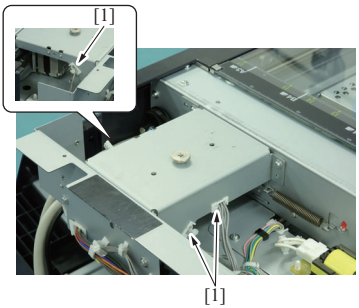

5. Remove the harness from three edge covers [1].

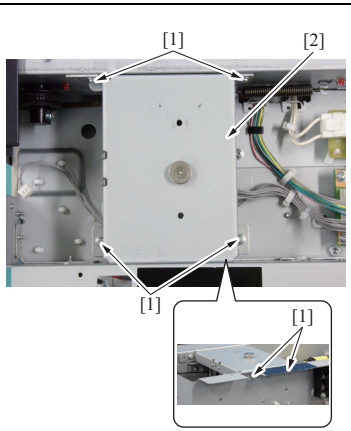

6. Remove six screws [1], and remove the ADF table [2].

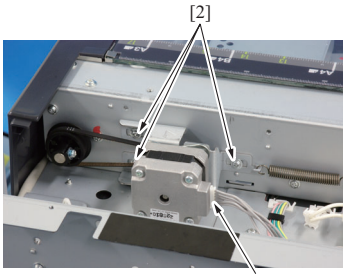

A0P0F2C147DA

7. Disconnect the connector [1] and remove three screws [2].

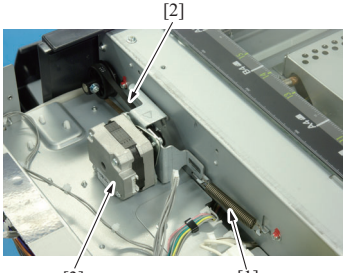

A0P0F2C148DA

8. Remove the spring [1] and the belt [2], and remove the scanner motor assy [3].

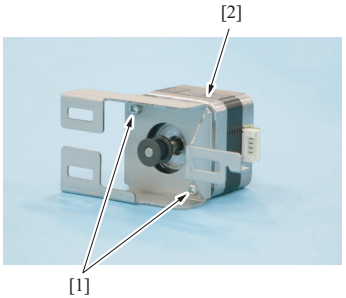

A00JF2C269DA

9. Remove two screws [1], and remove the scanner motor [2].

B. Reinstall procedure

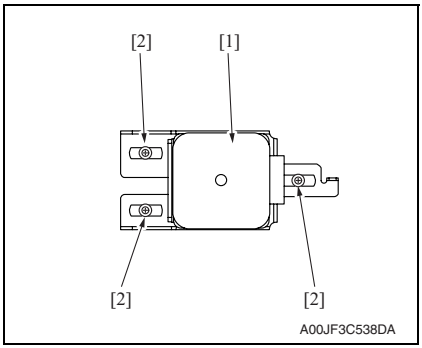

1. Temporarily secure the scanner motor assy [1] with three screws [2].

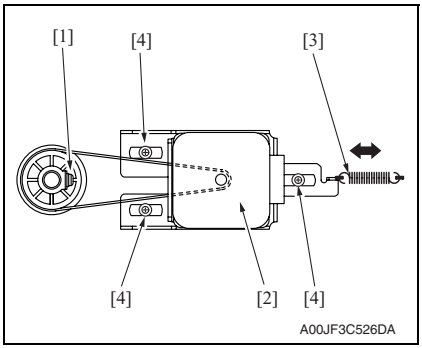

2. With the scanner drive gear set screw [1] located on the right-hand side as shown on the left, slide the scanner motor assy [2] to the left and check that it is returned to the original position by the tension of the spring [3].
   Perform this step three times.
3. Turn the pulley and make sure that the belt does not ride up on the pulley teeth.
4. Tighten the three screws [4] to fix the scanner motor assy into position.

5.5.68 Original glass moving motor (M202)

1. Remove the scanner rear cover.
   See P.85
2. Remove the scanner upper rear cover /1 and scanner upper rear cover /2.
   See P.86

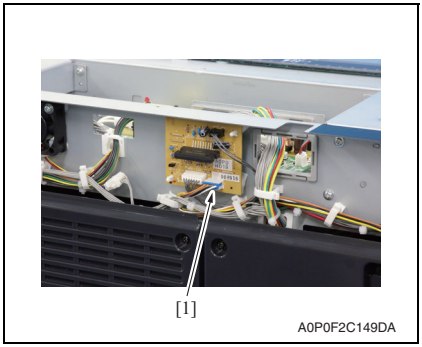

3. Disconnect the connector [1].

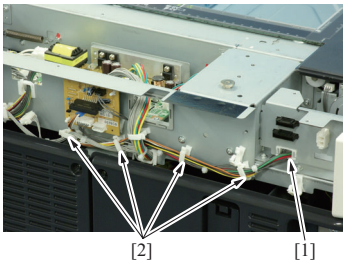

A0P0F2C150DA

4. Remove the harness from the edge cover [1] and four wire saddles [2].

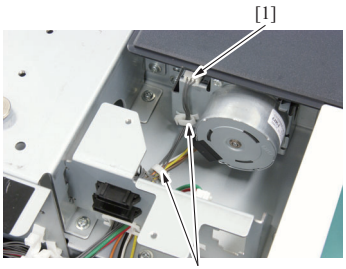

A0P0F2C151DA

5. Disconnect the connector [1].
6. Remove the harness from two wire saddles [2].

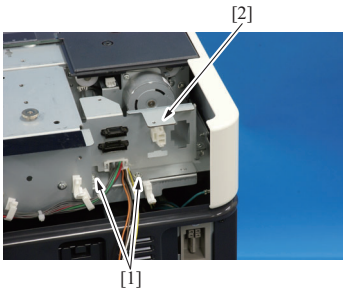

A0P0F2C152DA

7. Remove two screws [1], and remove the bracket [2].

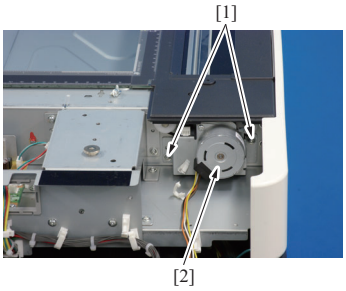

A0P0F2C153DA

8. Remove two screws [1], and remove the original glass moving motor assy [2].

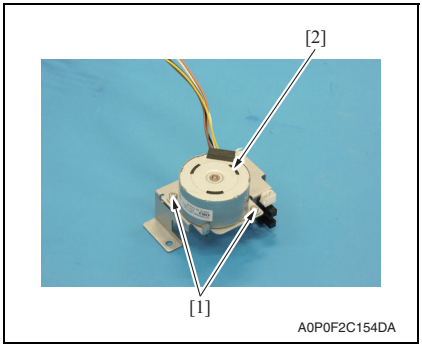

9. Remove two screws [1], and remove the original glass moving motor [2].

10. To reinstall, reverse the order of removal.

5.5.69 Waste toner agitating motor (M20)

1. Remove the PH relay board.
See P.128

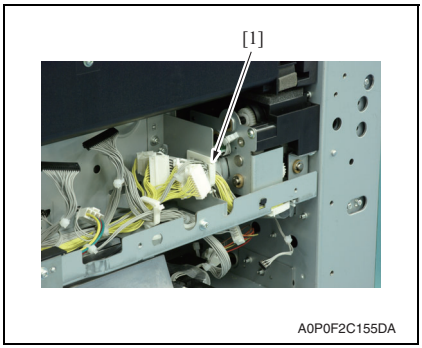

2. Remove the harness from the edge cover [1].

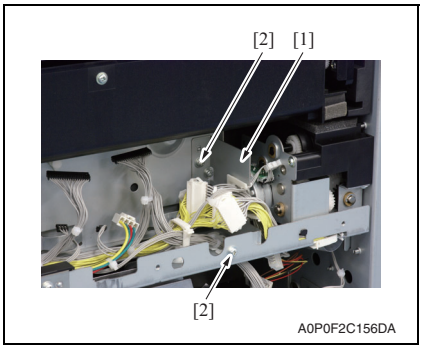

3. Remove two screws [2] of the bracket [1].

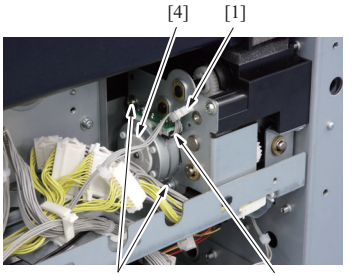

4. Remove the wire saddle [1], connector [2] and two screws [3], and take out the waste toner agitating motor [4].

5. To reinstall, reverse the order of removal.

5.5.70 Transport motor (M25)

1. Remove the lower rear cover.
See P.93
2. Remove the rear right cover /2 and interface cover /2.
See P.91

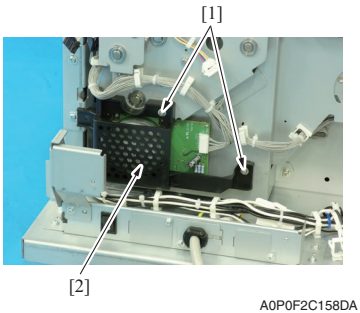

3. Remove two screws [1], and remove the transport motor cover [2].

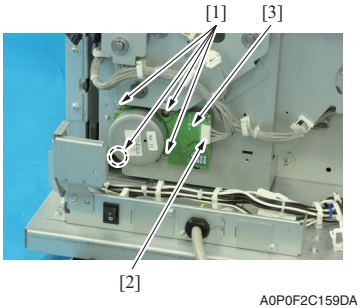

4. Remove four screws [1] and the connector [2], and remove the transport motor [3].

5. To reinstall, reverse the order of removal.

5.5.71 Vertical transport motor (M26)

1. Remove the lower rear cover.
See P.93

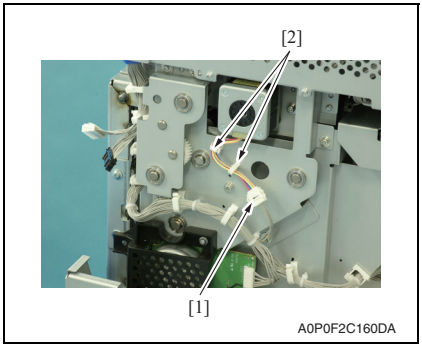

2. Disconnect the connector [1], and remove the harness from two wire saddles [2].

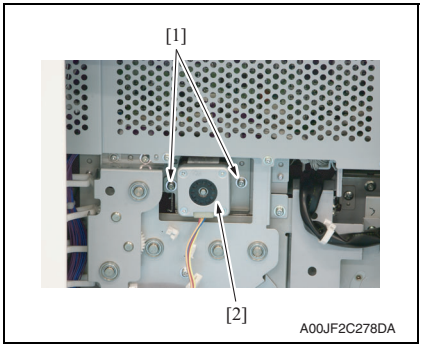

3. Remove two screws [1], and remove the vertical transport motor assy [2].

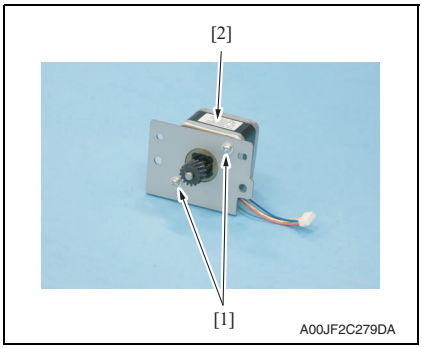

4. Remove two screws [1], and remove the vertical transport motor [2].

5. To reinstall, reverse the order of removal.

5.5.72 Transfer belt motor (M1)

1. Open the PWB box/2.
See P.140

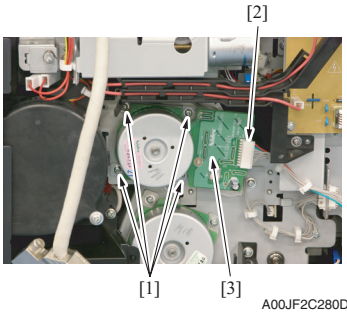

2. Remove four screws [1] and the connector [2], and take out the transfer belt motor [3].
3. To reinstall, reverse the order of removal.

5.5.73 Color PC drum motor (M16)

1. Open the PWB box/2.
See P.140

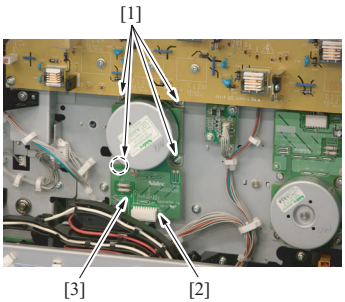

2. Remove four screws [1] and the connector [2], and take out the color PC drum motor [3].
3. To reinstall, reverse the order of removal.

NOTE

- **Adjust the positioning of the PC drive gear when mounting the color PC drum motor.**
See P.654

5.5.74 Color developing motor (M17)

1. Open the PWB box/2.
See P.140

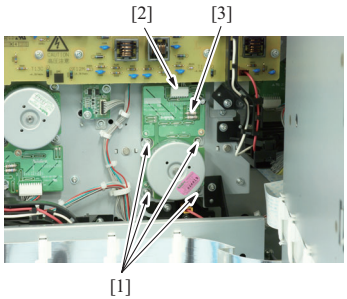

2. Remove four screws [1] and the connector [2], and take out the color developing motor [3].

3. To reinstall, reverse the order of removal.

5.5.75 2nd image transfer pressure retraction motor (M3)

1. Open the upper right door.

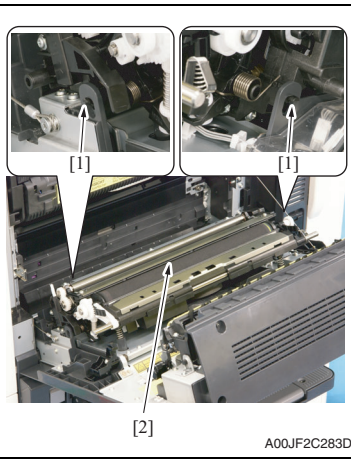

2. Unhook two tabs [1] and remove the intermediate transport unit [2].

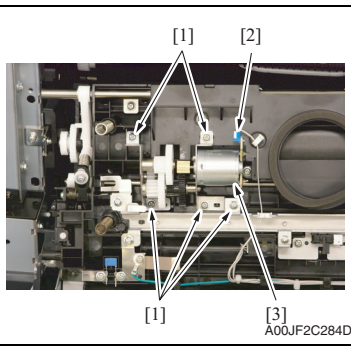

3. Remove five screws [1] and the connector [2], and take out the 2nd image transfer pressure retraction drive assy [3].

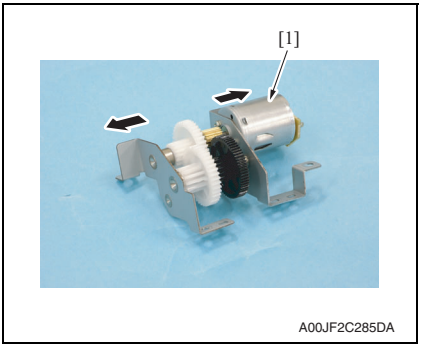

4. Remove the 2nd image transfer pressure retraction motor assy [1].

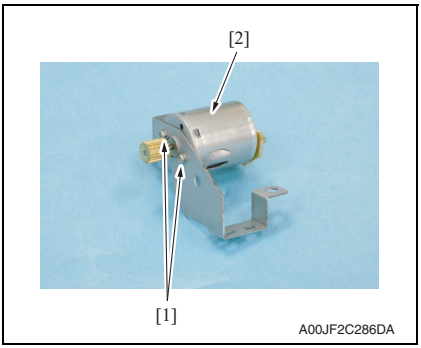

5. Remove two screws [1], and remove the 2nd image transfer pressure retraction motor [2].

6. To reinstall, reverse the order of removal.

5.5.76 Registration motor (M2)

1. Open the upper right door.

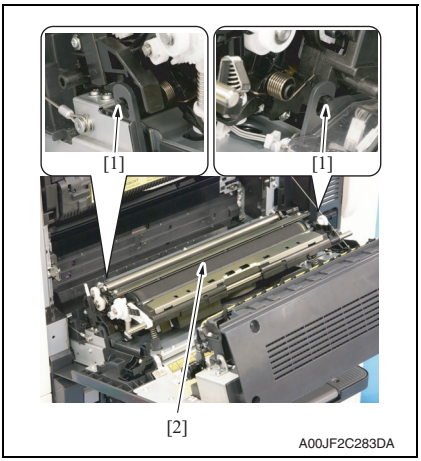

2. Unhook two tabs [1] and remove the intermediate transport unit [2].

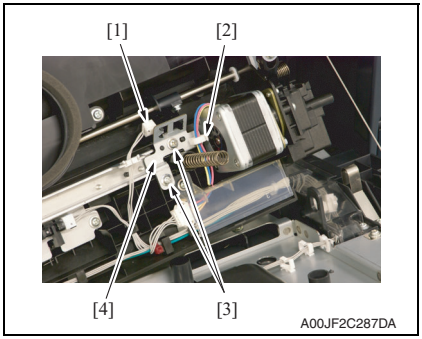

3. Disconnect the connector [1], remove the harness from the wire saddle [2].

4. Remove two screws [3] and take out the pressure welding alienation sensor assy [4].

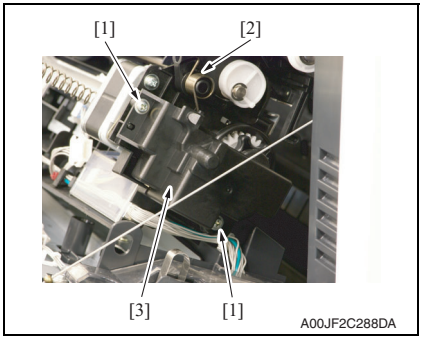

5. Remove two screws [1] and the spring [2], and remove the gear cover [3].

NOTE

- **Make sure not to lose the spring.**

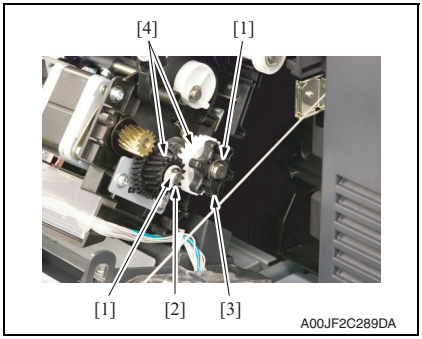

6. Remove two E-rings [1], the collar [2] and the rotating knob [3], and remove two gears [4].

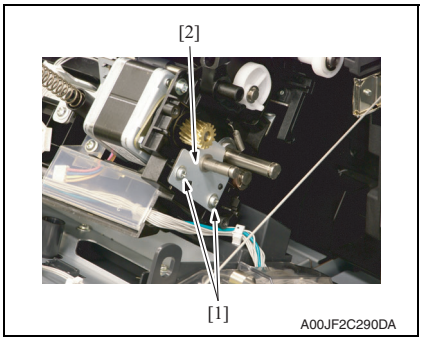

7. Remove two screws [1], and take out the shaft metal plate [2].

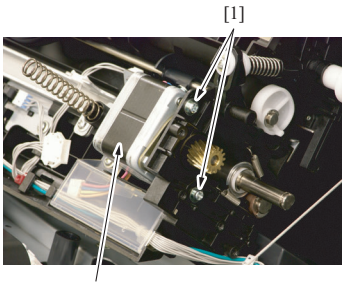

8. Remove two screws [1], and remove the registration motor [2].

9. To reinstall, reverse the order of removal.

5.5.77 Fusing pressure retraction motor (M29)

1. Remove the rear right cover/1.
See P.91
2. Open the PWB box/2.
See P.140

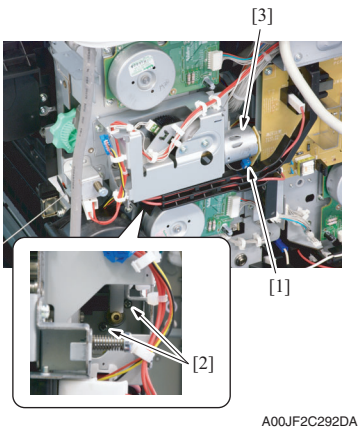

3. Disconnect the connector [1].
4. Remove two screws [2], and remove the fusing pressure retraction motor [3].

5. To reinstall, reverse the order of removal.

5.5.78 Fusing motor (M30)

1. Remove the scanner rear cover.
See P.85
2. Open the PWB box/2.
See P.140

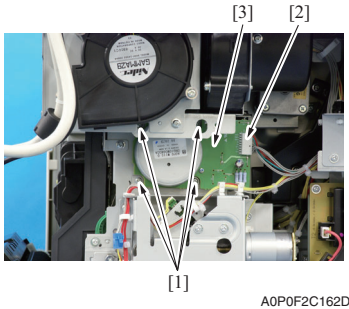

3. Remove four screws [1] and the connector [2], and remove the fusing motor [3].
4. To reinstall, reverse the order of removal.

5.5.79 Switchback motor (M33)

1. Open the PWB box/2.
See P.140

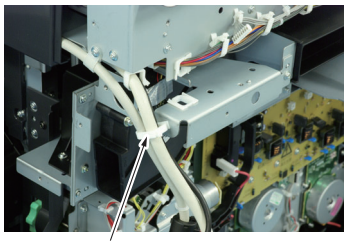

2. Remove the harness from the wire saddle [1].

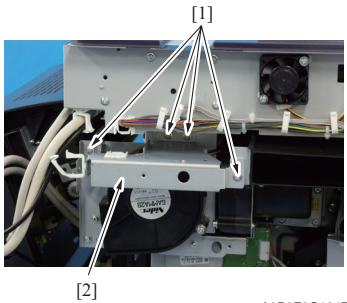

3. Remove four screws [1], and remove the metal plate [2].

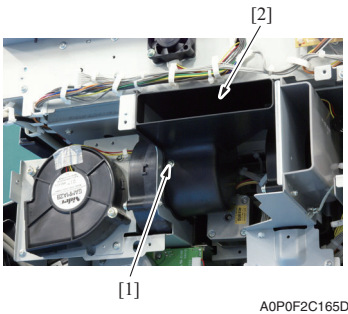

A0P0F2C165DA

4. Remove the screw [1], and remove the duct [2].

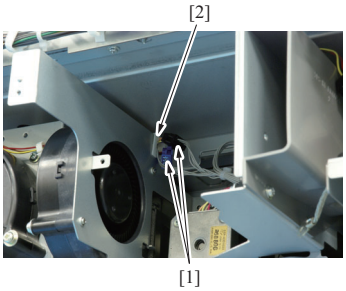

A0P0F2C166DA

5. Disconnect two connectors [1], and remove the harness from the edge cover [2].

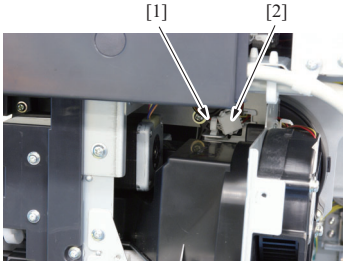

A0P0F2C167DA

6. Remove the harness from the wire saddle [1], and disconnect the connector [2].

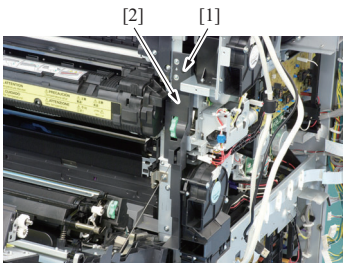

A0P0F2C168DA

7. Remove the screw [1], and remove the rear right cover/3 [2].

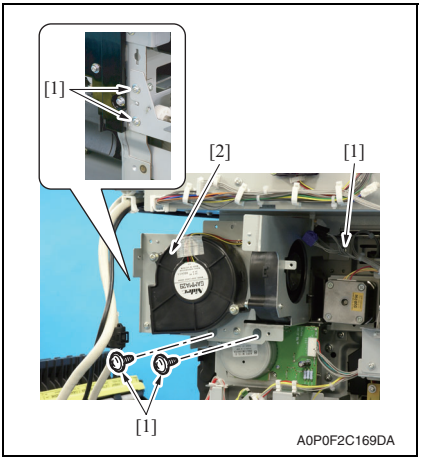

8. Remove five screws [1], and remove the fan motor assy /1 [2].

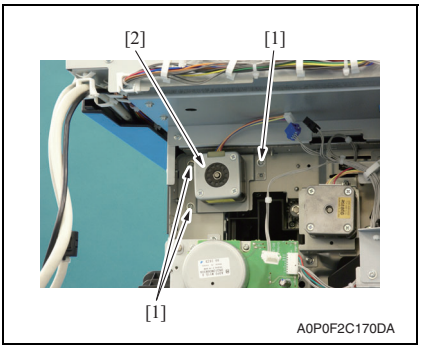

9. Remove three screws [1], and remove the switchback motor assy [2].

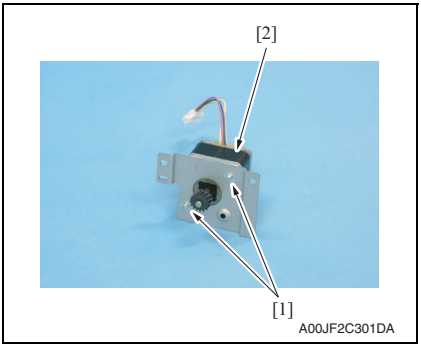

10. Remove two screws [1], and remove the switchback motor [2].

11. To reinstall, reverse the order of removal.

5.5.80 Exit motor (M4)

1. Remove the fan motor assy /1.
See the steps 1 to 8 of fusing motor removing procedure.
See P.171

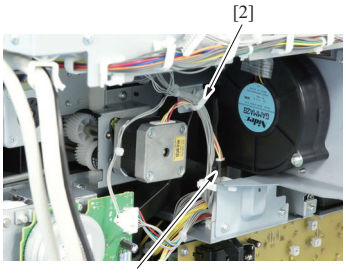

2. Disconnect the connector [1], and remove the harness from the wire saddle [2].

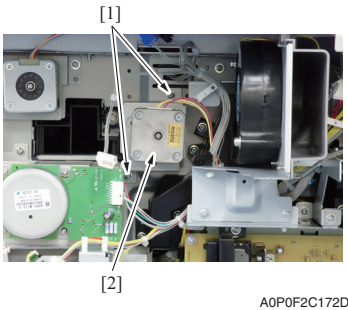

3. Remove two screws [1], and remove the exit motor assy [2].

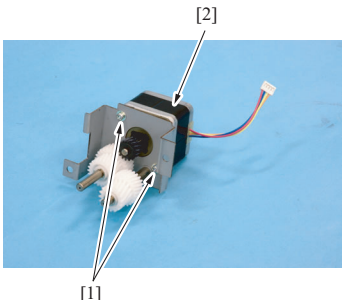

4. Remove two screws [1], and remove the exit motor [2].

5. To reinstall, reverse the order of removal.

5.5.81 K PC drum motor (M18)

1. Take out the reinforcing plate.
See the steps 1 to 11 of high voltage unit/1 removing procedure.
See P.144
2. Open the upper right door.

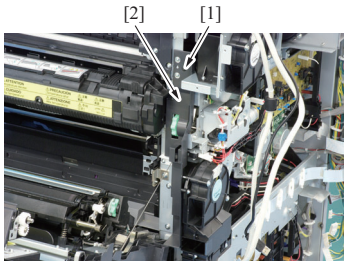

A0P0F2C168DA

3. Remove the screw [1], and remove the rear right cover/3 [2].

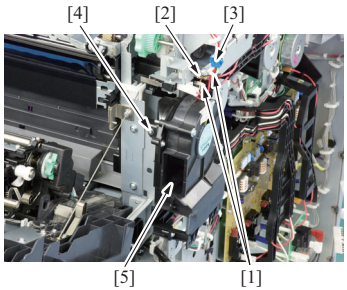

A0P0F2C173DA

4. Disconnect the connector [3], and remove the harness from two wire saddles [1] and the edge cover [2].
5. Remove the screw [4], and remove the fan motor assy /2 [5].

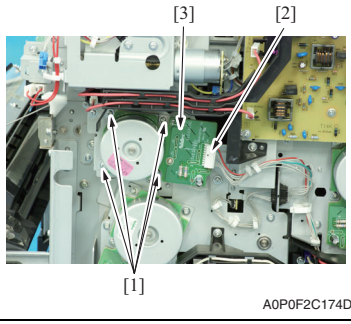

A0P0F2C174DA

6. Remove four screws [1] and the connector [2], and remove the K PC drum motor [3].
7. To reinstall, reverse the order of removal.

5.5.82 K developing motor (M19)

1. Remove the fan motor assy /2.
See the steps 1 to 5 of K PC drum motor removing procedure.
See P.175

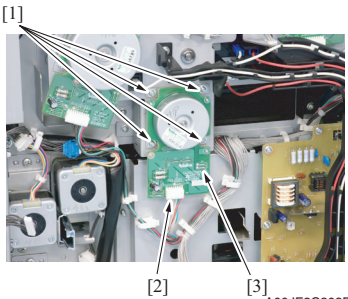

2. Remove four screws [1] and the connector [2], and remove the K developing motor [3].
3. To reinstall, reverse the order of removal.

5.5.83 Tray1 lift-up motor (M6)

1. Remove the tray1 and tray 2.
See P.96

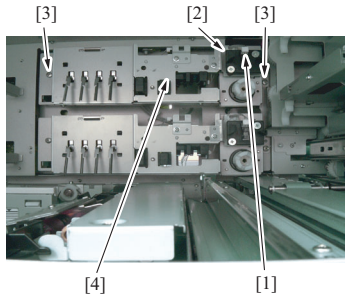

2. Disconnect the connector [1] and remove the harness from the edge cover [2].
3. Remove two screws [3], take out the tray1 lift-up motor assy [4] and turn it around.

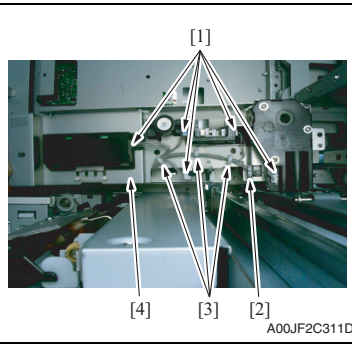

4. Disconnect five connectors [1].
5. Remove the harness from the edge cover [2] and three wire saddles [3], and remove the tray1 lift-up motor assy [4].

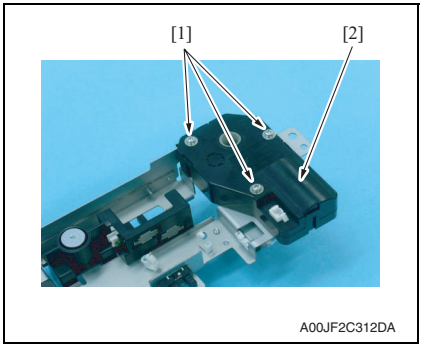

6. Remove three screws [1], and remove the tray1 lift-up motor [2].

7. To reinstall, reverse the order of removal.

5.5.84 Tray2 lift-up motor (M8)

1. Remove the tray1 and tray 2.
See P.96

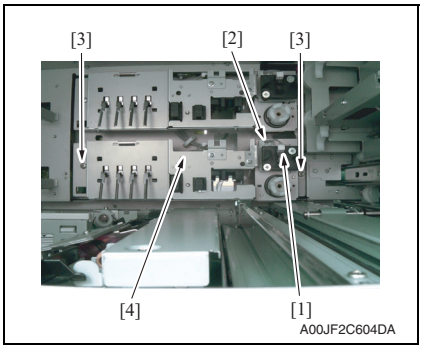

2. Disconnect the connector [1] and remove the harness from the edge cover [2].
3. Remove two screws [3], take out the tray2 lift-up motor assy [4] and turn it around.

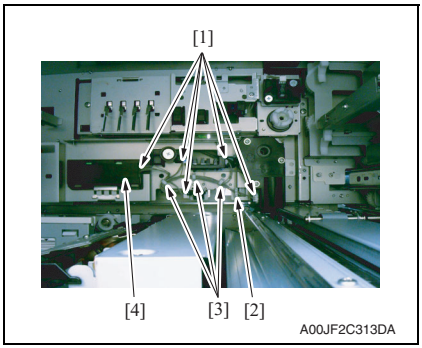

4. Disconnect five connectors [1].
5. Remove the harness from the edge cover [2] and three wire saddles [3], and remove the tray2 lift-up motor assy [4].

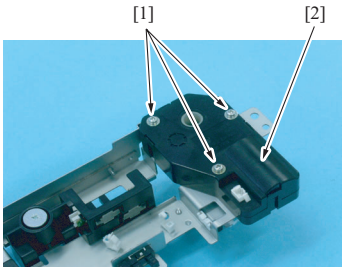

6. Remove three screws [1], and remove the tray 2 lift-up motor [2].

7. To reinstall, reverse the order of removal.

5.5.85 Tray3 lift-up motor (M23)

1. Remove the LCC drive unit.
See P.118

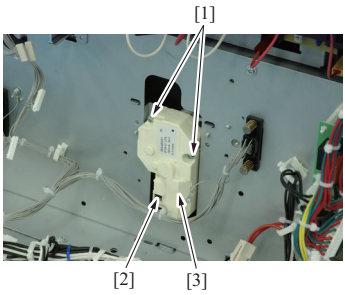

2. Remove two screws [1] and the connector [2], and remove the tray 3 lift-up motor [3].

3. To reinstall, reverse the order of removal.

5.5.86 Tray4 lift-up motor (M24)

1. Remove the LCC drive unit.
See P.118

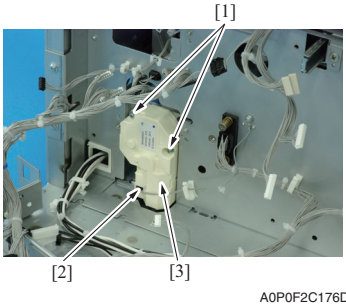

2. Remove two screws [1] and the connector [2], and take out the tray 4 lift-up motor [3].

3. To reinstall, reverse the order of removal.

5.5.87 Tray1 vertical transport motor (M5)

1. Remove the paper feed/transport drive board assy.
See the steps 1 to 9 of high voltage unit/1 removing procedure.
See P.144

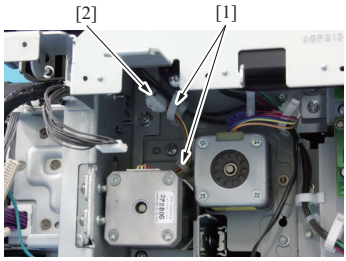

A0P0F2C177DA

2. Disconnect the connector [2], and remove the harness from two wire saddles [1].

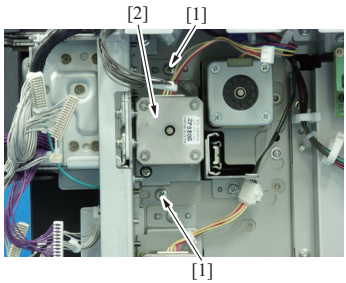

A0P0F2C178DA

3. Remove two screws [1], and remove the tray1 vertical transport motor assy [2].

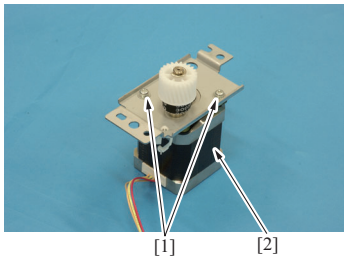

A0P0F2C179DA

4. Remove two screws [1], and remove the tray1 vertical transport motor [2].

5. To reinstall, reverse the order of removal.

5.5.88 Tray2 vertical transport motor (M7)

1. Remove the paper feed/transport drive board assy.
See the steps 1 to 9 of high voltage unit/1 removing procedure.
See P.144
2. Remove the LCC drive unit.
See P.118

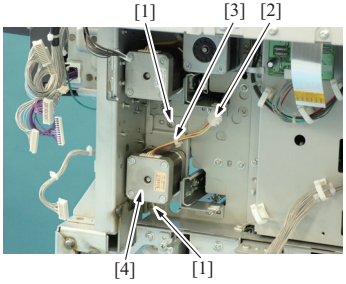

3. Remove two screws [1] and the connector [2].
4. Remove the harness from the wire saddle [3], and remove the tray 2 vertical transport motor assy [4].

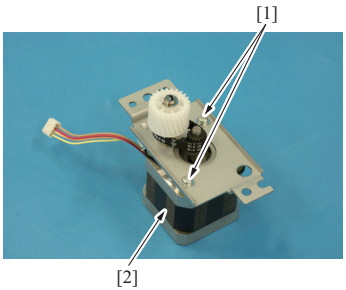

5. Remove two screws [1], and remove the tray2 vertical transport motor [2].

6. To reinstall, reverse the order of removal.

5.5.89 Take-up motor (M22)

1. Slide out tray 1/2.
2. Remove the reinforcing plate.
   See the steps 1 to 11 of high voltage unit/1 removing procedure.
   See P.144
3. Remove the tray 1 paper feed unit.
   See the steps 1 to 6 of tray 1 feed roller replacement procedure.
   See P.53
4. Remove the tray 2 paper feed unit.
   See the steps 1 to 6 of tray 2 feed roller replacement procedure.
   See P.57

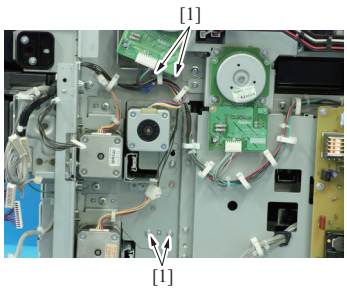

5. Remove four screws [1].

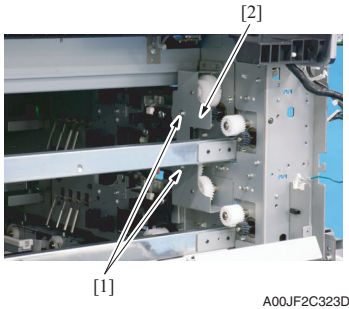

6. Remove two screws [1], and remove the metal plate [2].

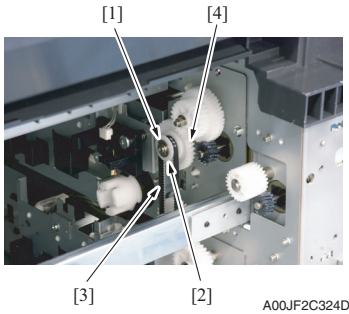

7. Remove the E-ring [1], the collar [2], the belt [3] and the gear [4].

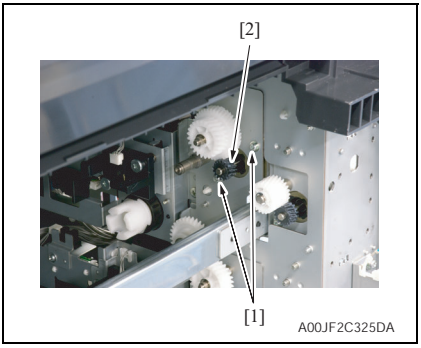

8. Remove two screws [1], and remove the take-up motor [2].

9. To reinstall, reverse the order of removal.

5.5.90 Charge cleaning motor/K (M15)

1. Remove the drum unit/K.
See P.36

2. Remove the developing unit/K.
See P.40

3. Remove the sensor unit.
See the steps 1 to 5 of IDC registration sensor/F and IDC registration sensor/R removing procedure.
See P.197

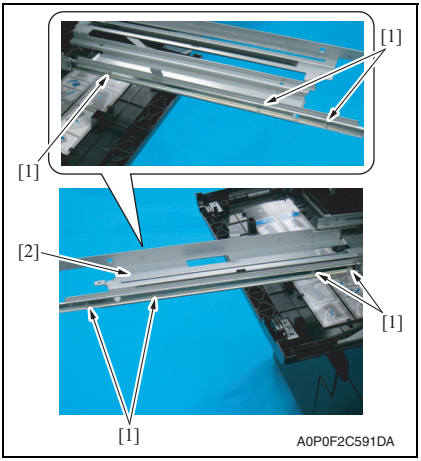

4. Remove seven screws [1], and remove the developing unit/K base plate [2].

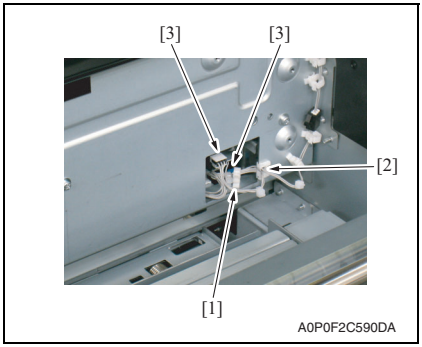

5. Remove the harnesses from the wire saddle [1] and the edge cover [2].
6. Disconnect two connectors [3].

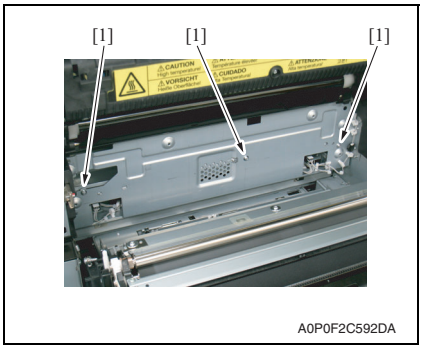

7. Remove three screws [1], and remove the charge cleaning motor/K assy.

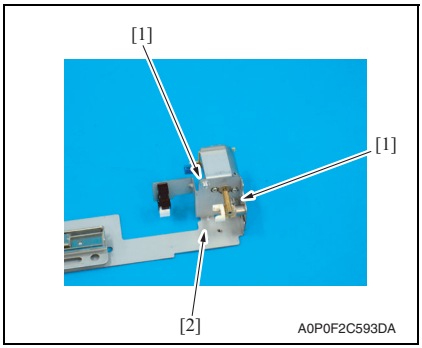

8. Remove two screws [1], and remove the rail assy [2].

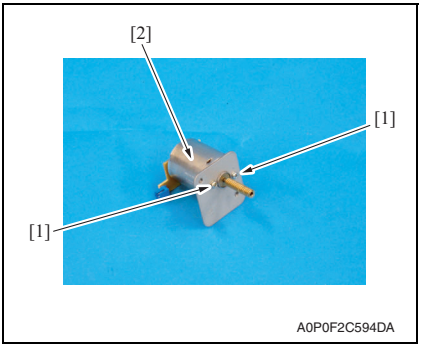

9. Remove two screws [1], and remove the charge cleaning motor/K [2].

10. To reinstall, reverse the order of removal.

5.5.91 Cleaner motor (M38)

1. Remove the fan motor assy /1.
See the steps 1 to 8 of switch back motor removing procedure.
See P.171

2. Remove the paper exit rear cover.
See P.84

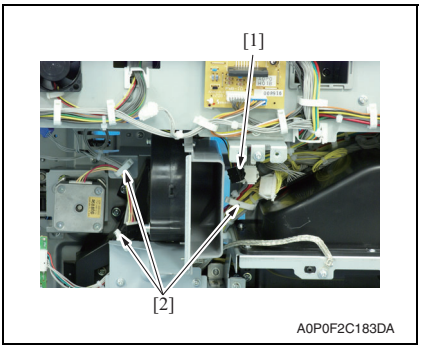

3. Disconnect the connector [1], and remove the harness from three wire saddles [2].

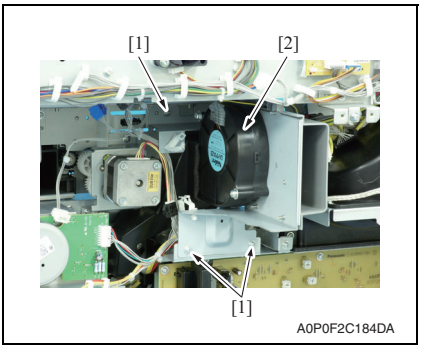

4. Remove three screws [1], and remove the fan motor assy /3 [2].

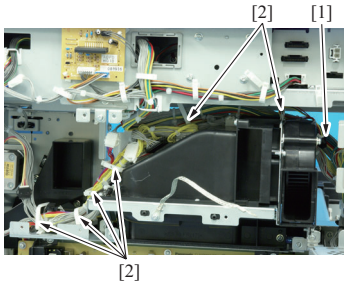

A0P0F2C186DA

5. Disconnect the connector [1].
6. Remove the harness from six wire saddles [2].

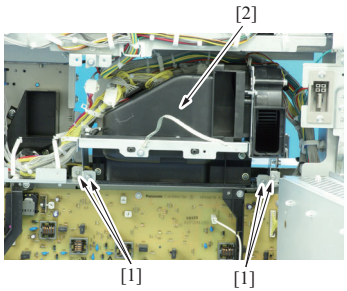

A0P0F2C187DA

7. Remove four screws [1], and take out the fan motor assy/4 [2] as clearing the harness.

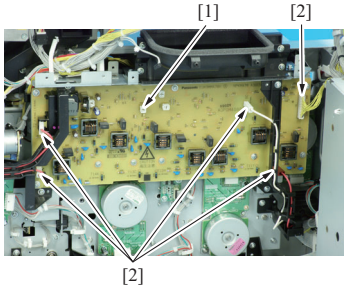

A0P0F2C188DA

8. Remove five connectors [2] on the high voltage unit/2 [1].

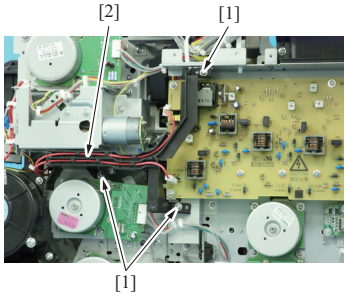

A0P0F2C189DA

9. Remove three screws [1], and remove the harness guide [2].

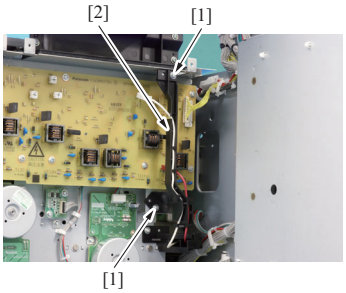

10. Remove two screws [1], and remove the harness guide [2].

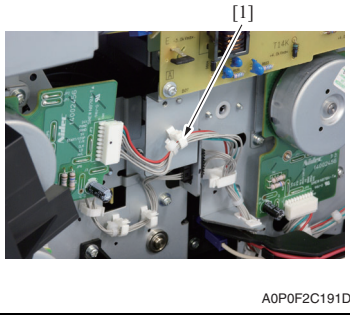

11. Remove the harness from the wire saddles [1].

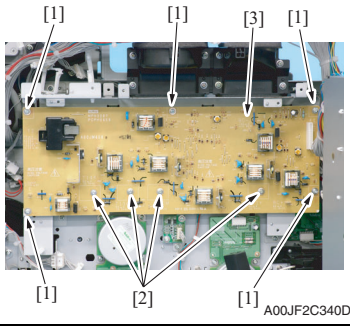

12. Remove five screws [1] and four tapping screws [2], and remove the high voltage unit/2 [3].

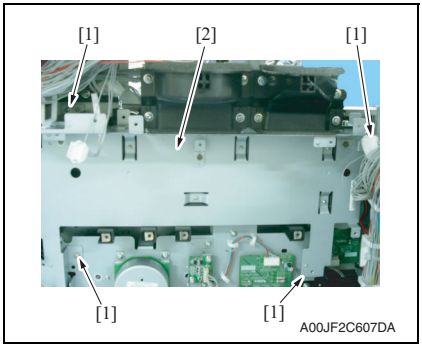

13. Remove four screws [1], and remove the metal plate [2].

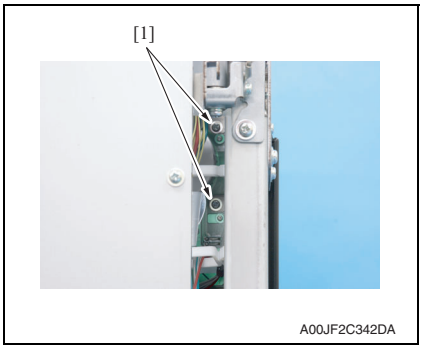

14. Close the PWB box/2 once and remove two screws [1] of the cleaner motor.

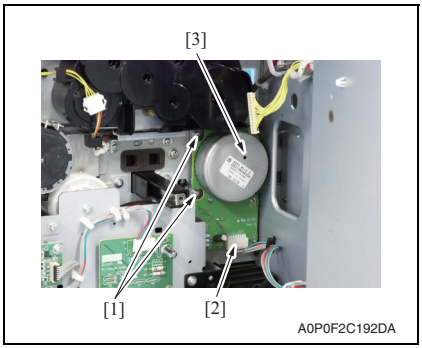

15. Open the PWB box/2 again, remove two screws [1] and the connector [2], and take out the cleaner motor [3].

16. To reinstall, reverse the order of removal.

5.5.92 1st image transfer pressure retraction motor (M21)

1. Remove the high voltage unit/2 assy.
See the steps 1 to 17 of cleaner motor removing procedure.
See P.184

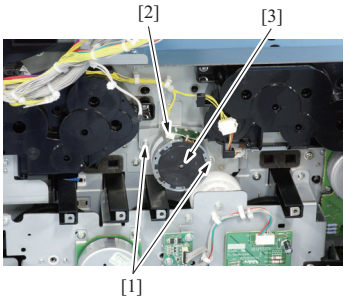

2. Remove two screws [1] and the connector [2], and take out the 1st image transfer pressure retraction motor [3].

3. To reinstall, reverse the order of removal.

5.5.93 Toner cartridge motor C/K (M14).

1. Remove the high voltage unit/2 assy.
See the steps 1to 17 of cleaner motor removing procedure.
See P.184

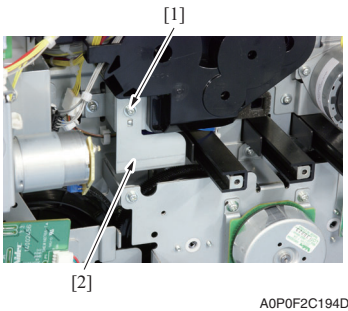

2. Remove the screw [1], and remove the metal plate [2].

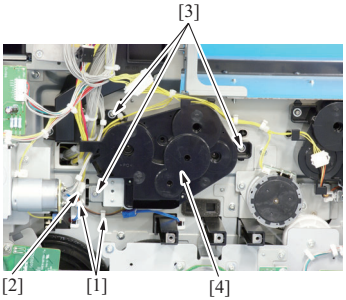

3. Clear the harness.
4. Disconnect the connector [2], and remove the harness from two wire saddles [1].
5. Remove three screws [3], and remove the toner cartridge motor C/K Assy [4].

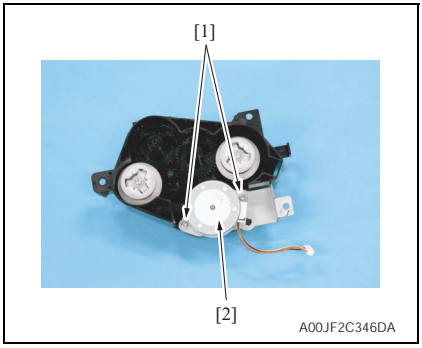

6. Remove two screws [1], and remove the toner cartridge motor C/K [2].

7. To reinstall, reverse the order of removal.

5.5.94 Toner cartridge motor Y/M (M13)

1. Remove the high voltage unit/2 Assy.
See the steps 1 to 17 of cleaner motor removing procedure.
See P.184

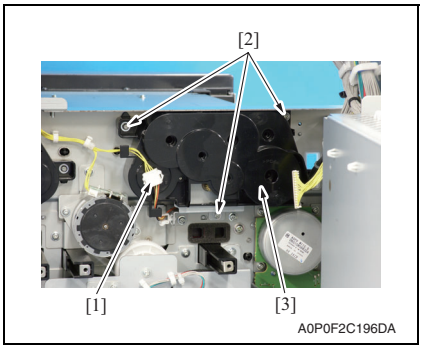

2. Disconnect the connector [1], and remove three screws [2], then remove the toner cartridge motor Y/M Assy[3].

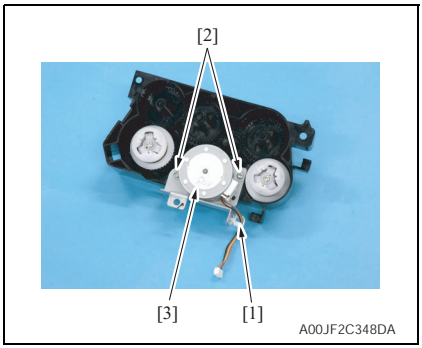

3. Remove the harness from the wire saddle [1].
4. Remove two screws [2], and remove the toner cartridge motor Y/M [3].

5. To reinstall, reverse the order of removal.

5.5.95 Toner supply motor/Y (M9), toner supply motor/M (M10), toner supply motor/C (M11), toner supply motor/K (M12)

1. Remove the upper front door.
See P.79
2. Remove the upper left cover.
See P.83
3. Remove the toner cartridges (C,M,Y,K).
See P.44
4. Open the lower front door and take out the all imaging units.
See P.33

NOTE

- **After the imaging unit has been removed from the main body wrap it in the light shielding cloth and store it in a dark place. DO NOT leave the imaging unit exposed to light for a extended of time as it will become damaged.**

5. Remove the front right cover.
See P.93

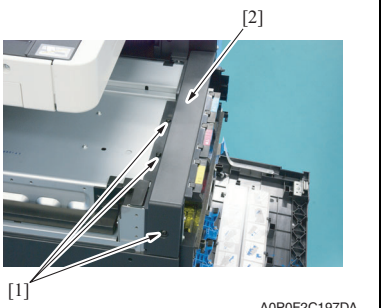

6. Remove three screws [1], and remove the exit tray front cover [2].

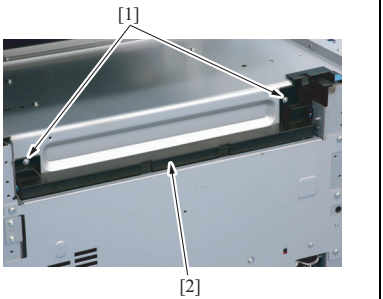

7. Remove two screws [1], and remove the connector cover [2].

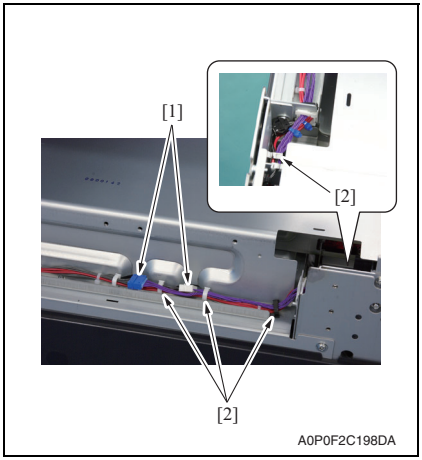

8. Disconnect two connectors [1], and remove the harness from four wire saddles [2].

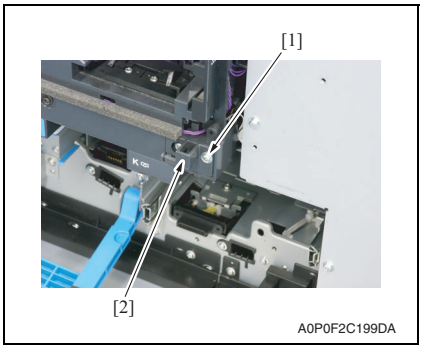

9. Remove the screw [1], and remove the hinge convex part [2].

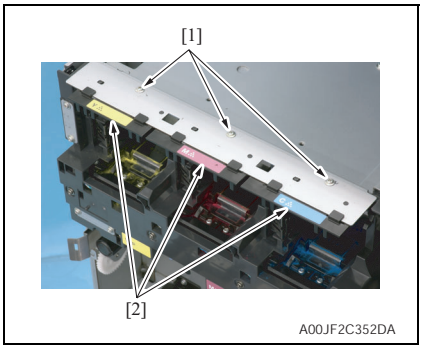

10. Remove three screws [1], and remove the toner cartridge inserting port cover/Y,M,C [2].

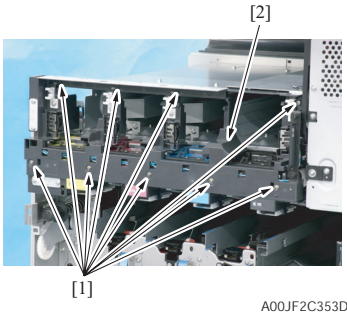

11. Remove nine screws [1], and pull the front cover [2] forward slowly.

NOTE

- **Use care not to mistake in the kind of the screws.**

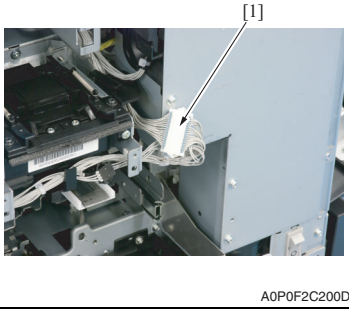

12. Disconnect the connector [1].

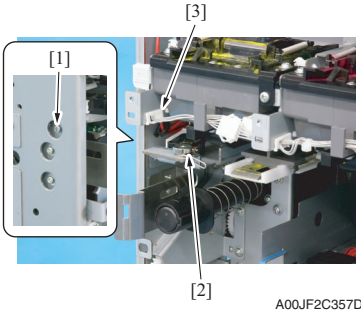

13. Remove the screw [1], and remove the front door switch assy[2], then remove the harness from the wire saddle [3].

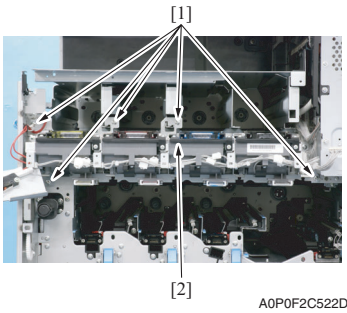

14. Remove five screws [1], and remove the toner hopper units assy [2].

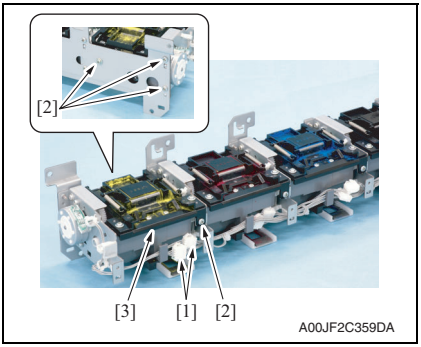

15. Disconnect two connectors [1], and remove four screws [2], then remove the toner hopper unit /Y [3].

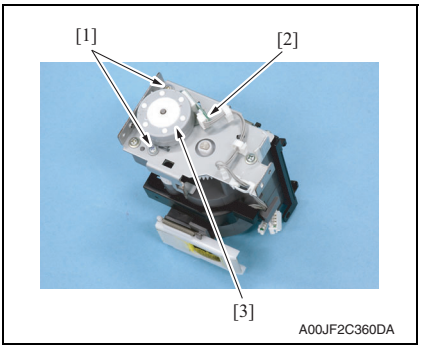

16. Remove two screws [1] and disconnect the connector [2], and remove the toner supply motor /Y [3].

17. Repeat the steps 15 to 16 and take out the toner supply motor/Y, M, C in order.

18. To reinstall, reverse the order of removal.

5.5.96 Tray 1 paper feed clutch (CL1)

1. Remove the tray 1 paper feed unit.
See the steps 1 to 6 of tray 1 paper feed roller replacement procedure.
See P.53

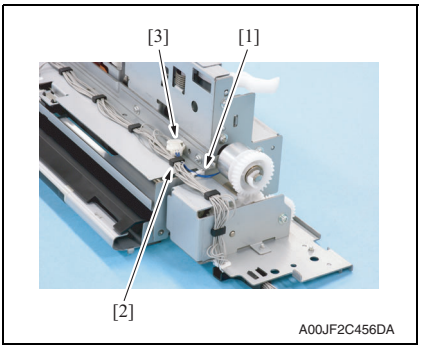

2. Remove the harness from the edge cover [1], the harness holder [2], and unplug the connector [3].

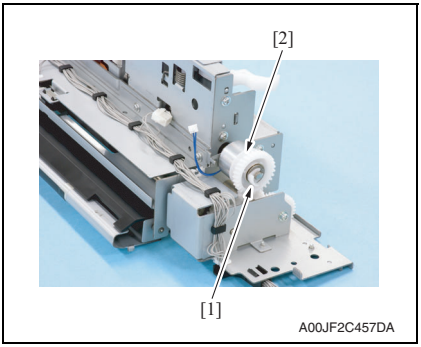

3. Remove the C-clip [1], and remove the tray 1 paper feed clutch [2].
4. To reinstall, reverse the order of removal.

NOTE

- **When mounting the tray 1 paper feed clutch, set the convex part of the stopper into the concave part of the tray 1 paper feed clutch.**

5.5.97 Tray 2 paper feed clutch 2 (CL2)

1. Remove the tray 2 paper feed unit.
See the steps 1 to 6 of tray2 paper feed roller replacement procedure.
See P.57

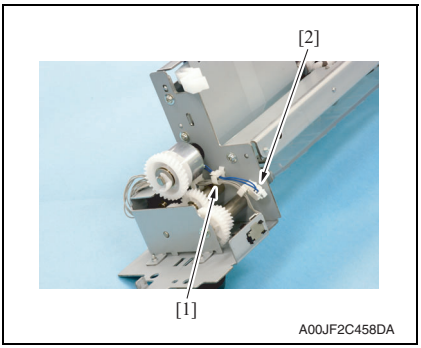

2. Remove the harness from the wire saddle [1], and disconnect the connector [2].

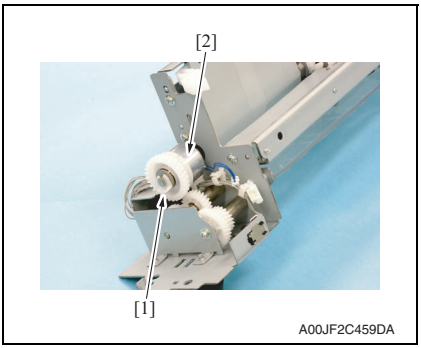

3. Remove the C-clip [1], and remove the tray 2 paper feed clutch [2].
4. To reinstall, reverse the order of removal.

NOTE

- **When mounting the tray 2 paper feed clutch, set the convex part of the stopper into the concave part of the tray 2 paper feed clutch.**

5.5.98 Horizontal transport clutch (CL3)

1. Remove the LCC drive unit.
See P.118

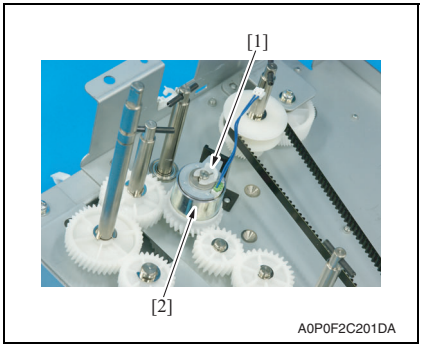

2. Remove the C-clip [1], and remove the horizontal transport clutch [2].
3. To reinstall, reverse the order of removal.

NOTE

- **When mounting the horizontal transport clutch, set the convex part of the stopper into the concave part of the horizontal transport clutch.**

5.5.99 Tray 3 paper feed clutch (CL5)/Tray 3 transport clutch (CL6)

1. Slide out the tray 3.

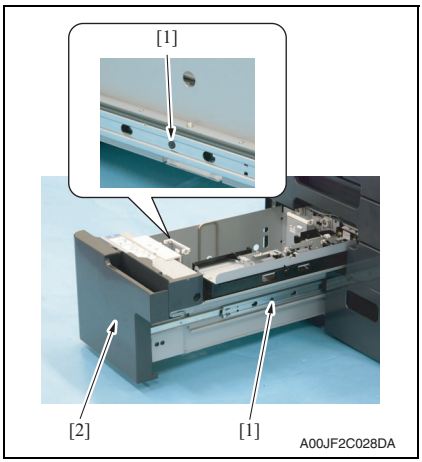

2. Remove two screws [1] and pull out the tray 3 [2] to the end.

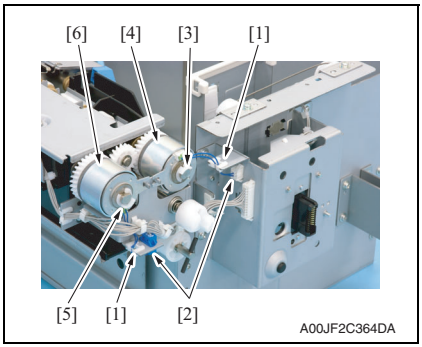

3. Remove the harness from two edge covers [1], and disconnect the connector [2].
4. Remove the C-clip [3], and remove the tray 3 paper feed clutch [4].
5. Remove the C-clip [5], and remove the tray 3 transport clutch [6].
6. To reinstall, reverse the order of removal.

NOTE

- **When mounting the tray 3 paper feed clutch/tray 3 transport clutch, set the convex part of the stopper into the concave part of the clutch.**

5.5.100 Tray 4 paper feed clutch (CL7)

1. Slide out the tray 4.

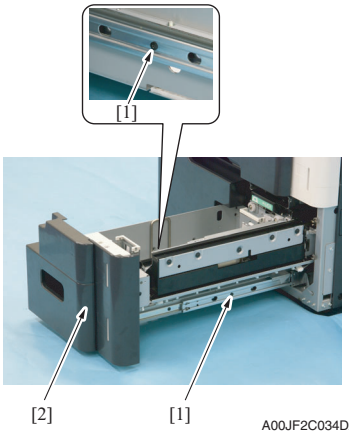

2. Remove two screws [1] and pull out the tray 4 [2] to the end.

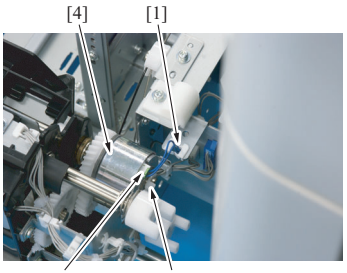

3. Remove the harness from the edge cover [1], and disconnect the connector [2].
4. Remove the C-clip [3], and remove the tray 4 paper feed clutch [4].
5. To reinstall, reverse the order of removal.

NOTE

- **When mounting the tray 4 paper feed clutch, set the convex part of the stopper into the concave part of the tray 4 paper feed clutch.**

5.5.101 IDC registration sensor/F (IDCS/F), IDC registration sensor/R (IDCS/R).

1. Open the upper right door.
2. Remove the image transfer entrance guide.
See the steps 1 to 4 of image transfer belt unit removing procedure.
See P.46

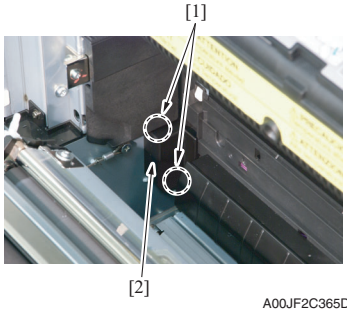

3. Unhook two tabs [1], and remove the connector cover [2].

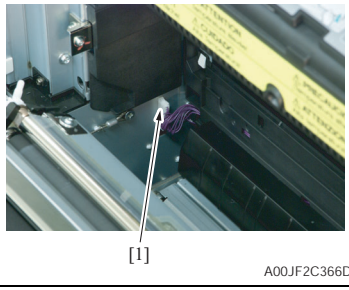

4. Disconnect the connector [1].

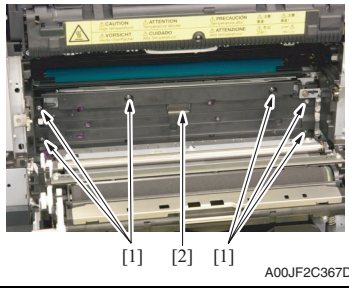

5. Remove six screws [1], and remove the sensor unit [2].

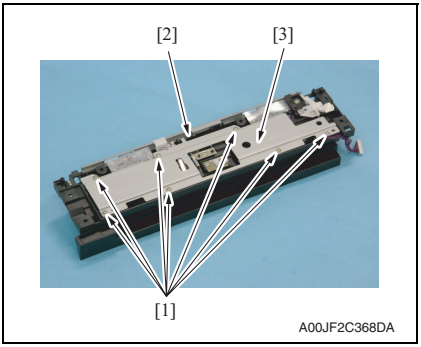

6. Remove seven screws [1] and the spring [2], and remove the sensor cover [3].

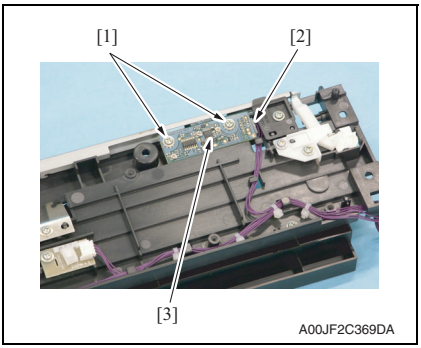

7. Remove two screws [1], and disconnect the connector [2], then remove the IDC registration sensor/F [3].

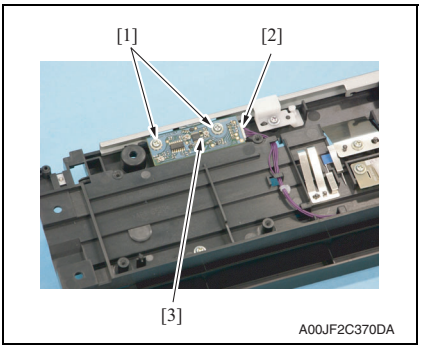

8. Remove two screws [1], and disconnect the connector [2], then remove IDC registration sensor/R [3].

9. To reinstall, reverse the order of removal.

5.5.102 Scanner drive cables

A. Removal procedure

1. Remove the scanner chassis.
See P.123
2. Remove the exposure unit.
See P.107
3. Remove the scanner motor.
See P.159
4. Remove the original glass moving unit.
See P.103
5. Remove the USB board assy.

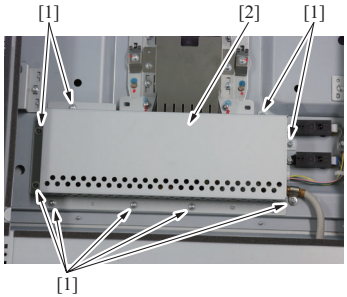

A0P0F2C211DA

6. Remove nine screws [1], and remove the CCD board protective shield [2].

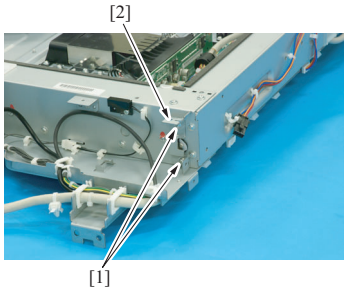

A0P0F2C203DA

7. Remove two screws [1], and remove the metal plate [2].

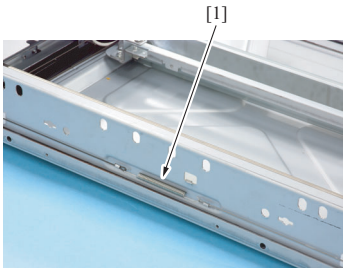

A00JF2C435DA

8. Remove the hook side spring [1] of the scanner drive cables.

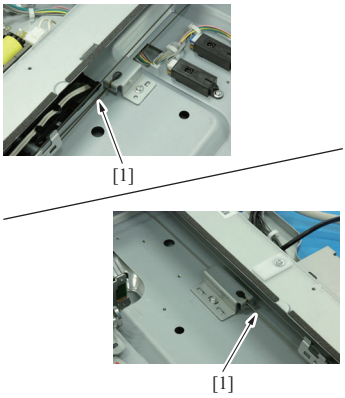

A0P0F2C204DA

9. Remove the bead side [1] of the scanner drive cables from the adjustment anchor.

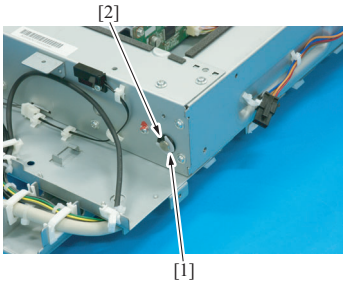

A0P0F2C205DA

10. Remove the C-ring [1] and bearing [2].

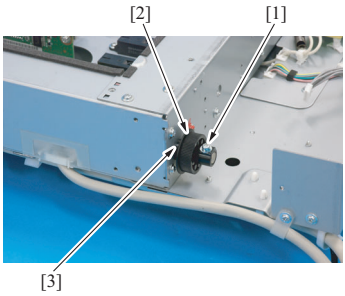

A0PF2C206DA

11. Remove the screw [1], and remove the scanner drive gear [2].
12. Remove the bearing [3].

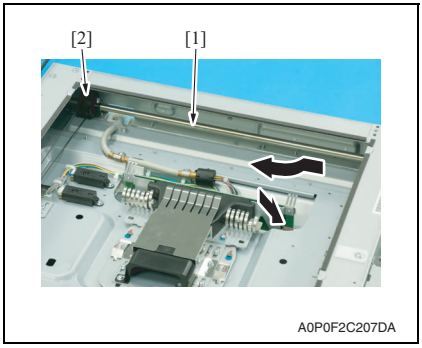

13. Remove the shaft [1] and pulleys [2].

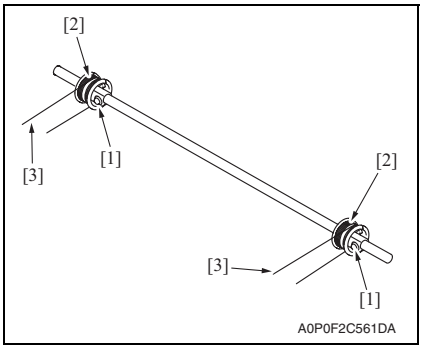

14. Remove the screw [1] one each and take out the two pulleys [2] from the shaft.

15. Remove the scanner drive cables [3] from each pulley [2].

B. reinstall procedure

(1) Overall figure

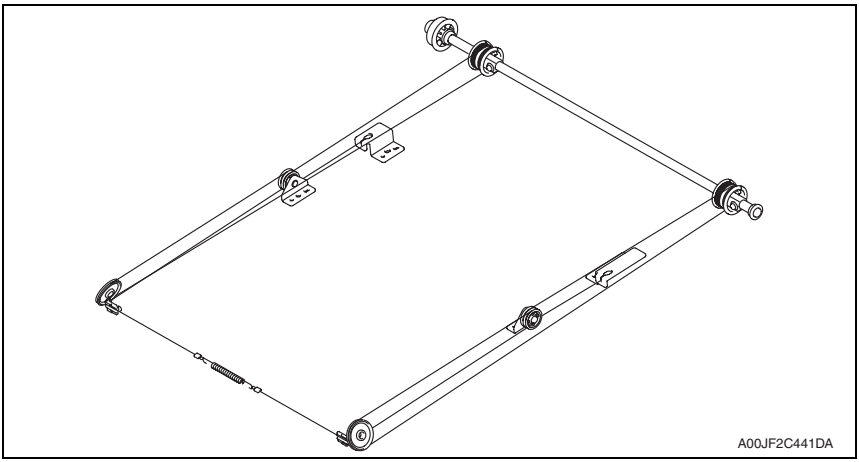

(2) Winding of the scanner drive cables

NOTE

- **The scanner drive cable differs in type between the front (silver) and the rear (black), which are colored differently.**

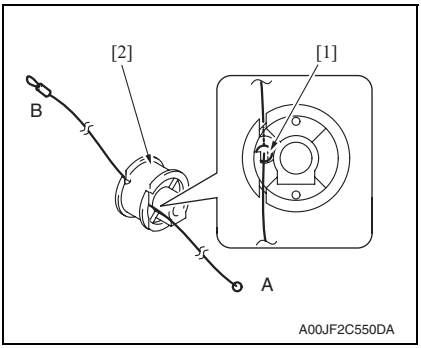

<Front>

1. Set the round bead [1] of the scanner drive cable (silver) to the pulley [2] at the position as shown in the illustration.

NOTE

- **Make sure that the bead snugly rests in the slit in the pulley.**

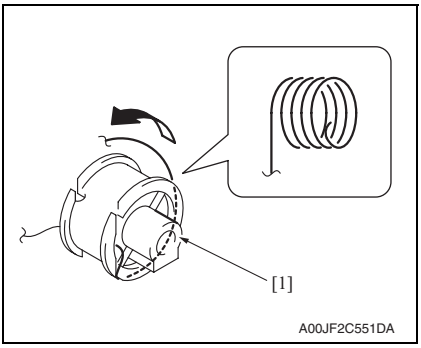

2. Twist the A side scanner drive cable around the pulley [1] starting from the front groove in anticlockwise direction five times.

NOTE

- **Make sure that no part of the cable rides on the other.**

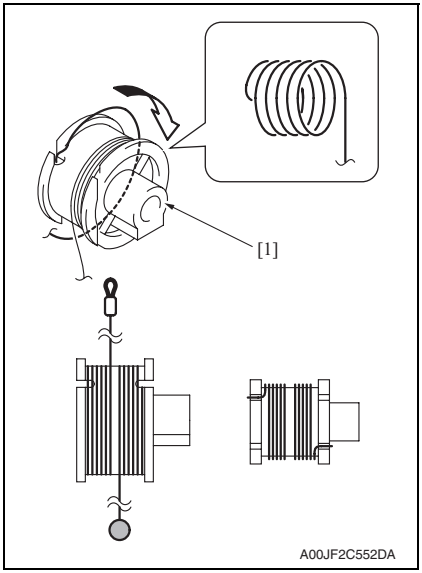

3. Twist the B side scanner drive cable around the pulley [1] starting from the rear groove in clockwise direction five times.

NOTE

- **Make sure that no part of the cable rides on the other.**

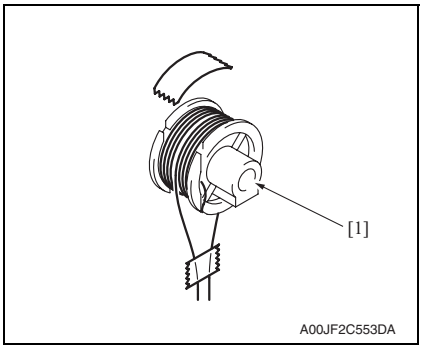

4. Apply the tape to fix the scanner drive cable to the pulley [1].

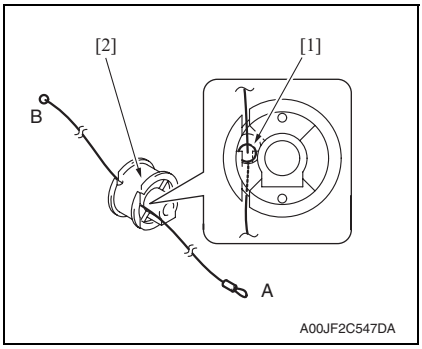

<Rear>

5. Set the round bead [1] of the scanner drive cable (black) to the pulley [2] at the position as shown in the illustration.

NOTE

- **Make sure that the bead snugly rests in the slit in the pulley.**

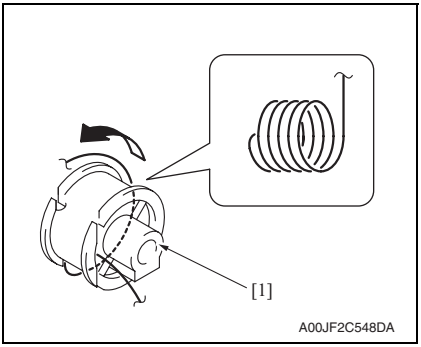

6. Twist the B side scanner drive cable around the pulley [1] starting from the rear groove in anticlockwise direction five times.

NOTE

- **Make sure that no part of the cable rides on the other.**

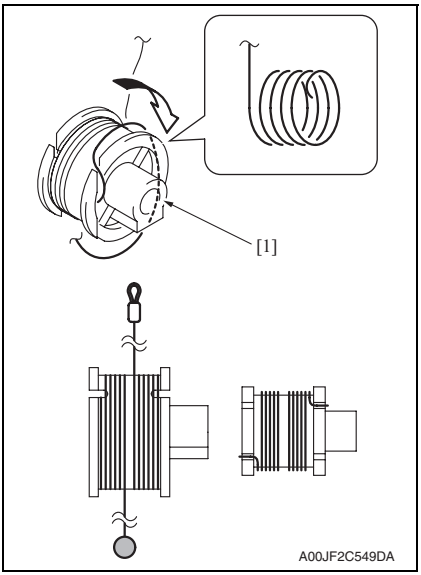

7. Twist the A side scanner drive cable around the pulley [1] starting from the front groove in clockwise direction five times.

NOTE

- **Make sure that no part of the cable rides on the other.**

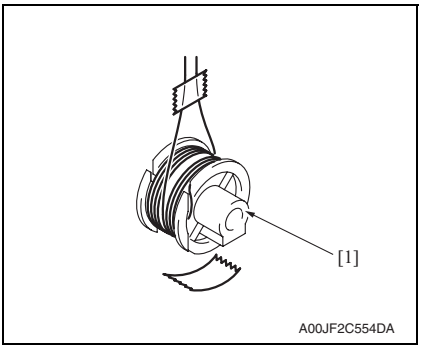

8. Apply the tape to fix the scanner drive cable to the pulley [1].

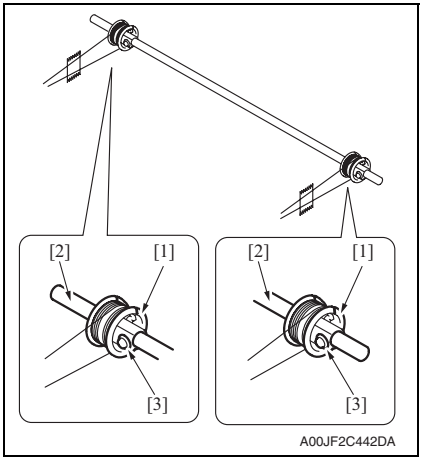

9. Put the front/rear pulleys [1] into the shaft [2], and fix them with one screw each [3].

NOTE

- **Set the pulley at the direction as shown in the illustration.**
- **Fix the pulley at the position as shown in the illustration.**
- **Apply the screw lock on the screw.**

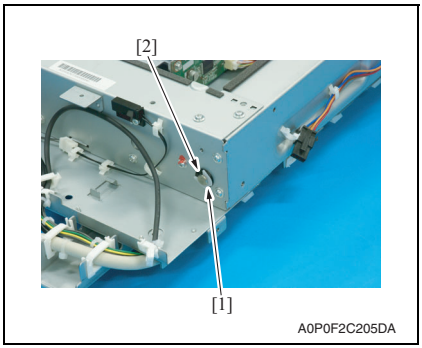

10. Install the C-ring [1] and the bearing [2].

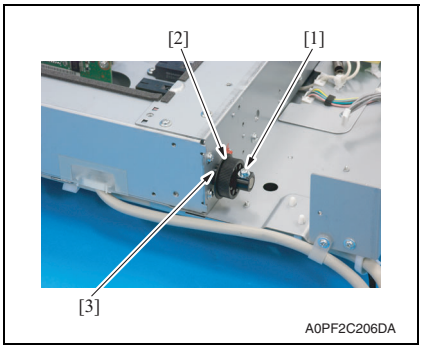

11. Install the bearing [3].

12. Install the gear [2] with the screw [1].

NOTE

- **Apply the screw lock on the screw.**

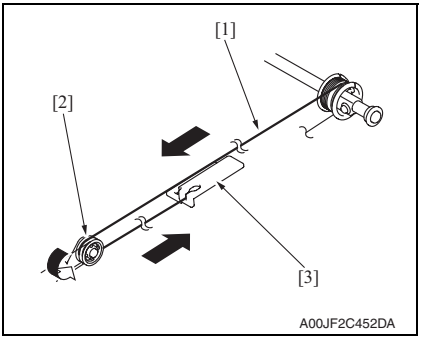

<Front>

13. Place the fixed bead side of the scanner drive cable [1] to the pulley B [2], and place the fixed bead to the adjustment anchor [3].

NOTE

- **Make sure to hook the scanner drive cable to the outside groove of the pulley B.**

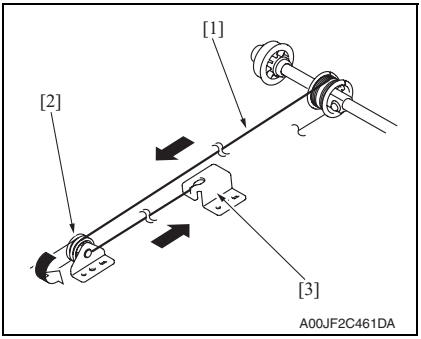

<Rear>

14. Place the fixed bead side of the scanner drive cable [1] to the pulley D [2], and place the fixed bead to the adjustment anchor [3].

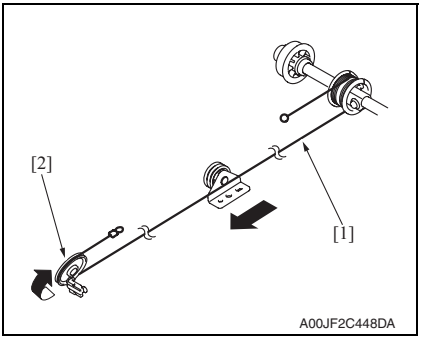

<Rear>

15. Place the hook side of the scanner drive cable [1] to the pulley C [2].

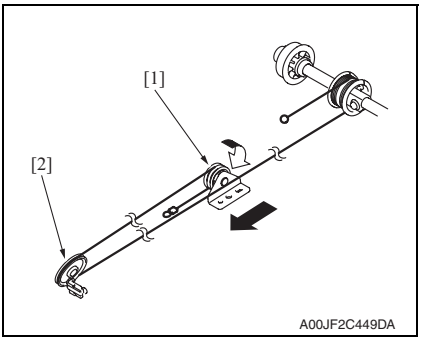

16. Place the scanner drive cable to the pulley D [2] via the pulley C [1].

NOTE

- **Make sure to hook the scanner drive cable to the outside groove of the pulley D [2].**

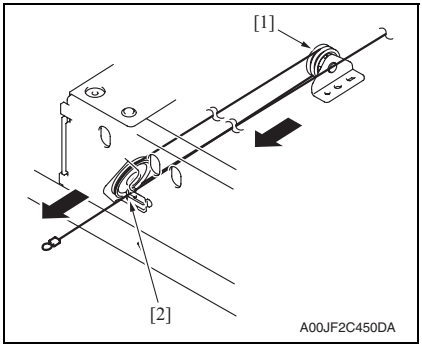

17. Put the scanner drive cable into the scanner frame hole [2] via the pulley D [1].

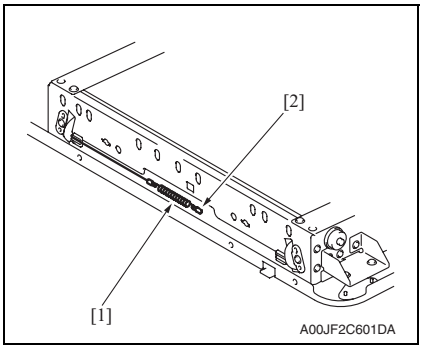

18. Hook the end of the spring [1] to the wire and the other end to the hook [2] on the scanner left frame.

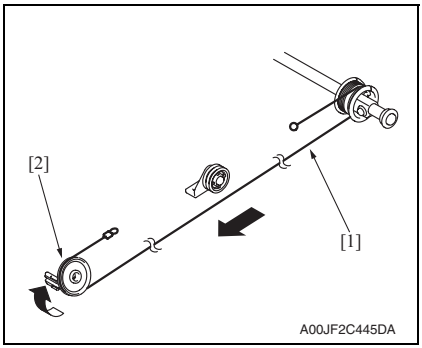

<Front>

19. Place the hook side of the scanner drive cable [1] to the pulley A [2].

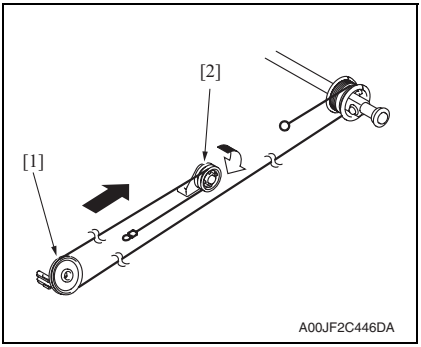

20. Place the scanner drive cable to the pulley B [2] via the pulley A [1].

NOTE

- **Make sure to hook the scanner drive cable to the outside groove of the pulley B [2].**

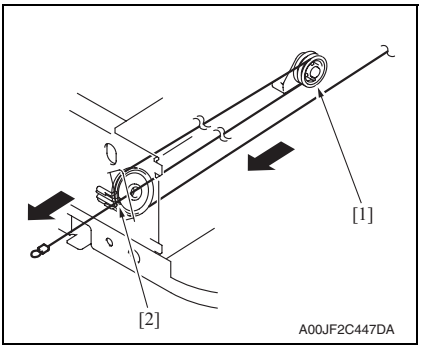

21. Put the scanner drive cable into the scanner frame hole [2] via the pulley B [1].

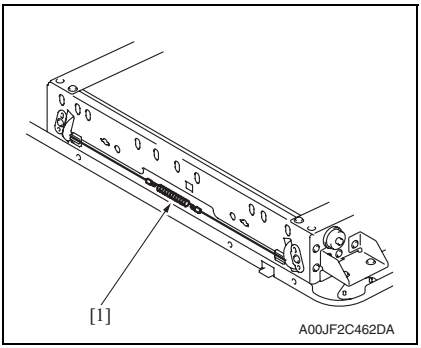

22. Remove the end of the spring [1] from the hook. Hook the end of the spring to the wire coming from the front.

23. Remove the tape that fixes the front/rear pulleys.

24. Adjust the focus positioning of the scanner and mirrors unit.
See P.641

25. Adjust the position of the scanner and 2nd/3rd mirrors carriage.
See P.642

26. Mount the original glass moving unit, and adjust the height of the original glass moving unit.
See P.644

27. Perform the following setting.
[Service Mode] → [Machine] → [Scan Area] → [Feed Direction Adjustment]]
See P.474
28. Perform the following setting. [Service Mode] → [ADF] → [Read Pos Adj]
See P.593

5.5.103 Tray 3/4 lift wire

NOTE

- **The tray 3 and 4 are of the same form and mechanism. This procedure shows the steps taken for the tray 3.**

1. Remove the tray from the main body.
See P.96

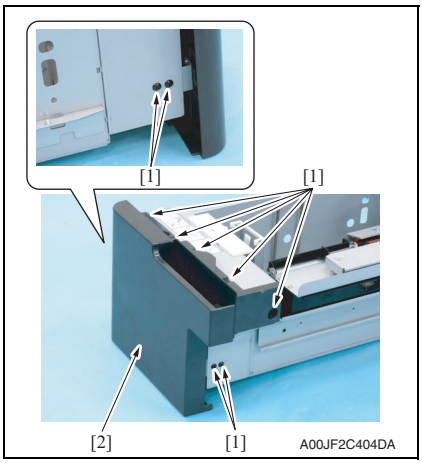

2. Remove nine screws [1], and remove the tray 3 front cover [2].

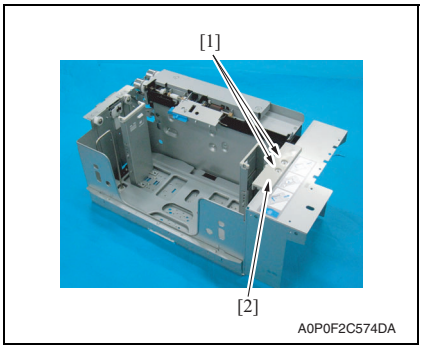

3. Remove two screws [1], and remove the wire cover /Fr [2].

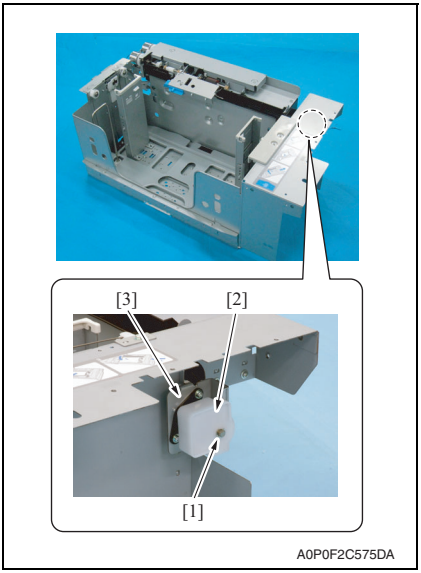

4. Remove the E-ring [1] and the gear cover [2], and take out the gear Assy [3].

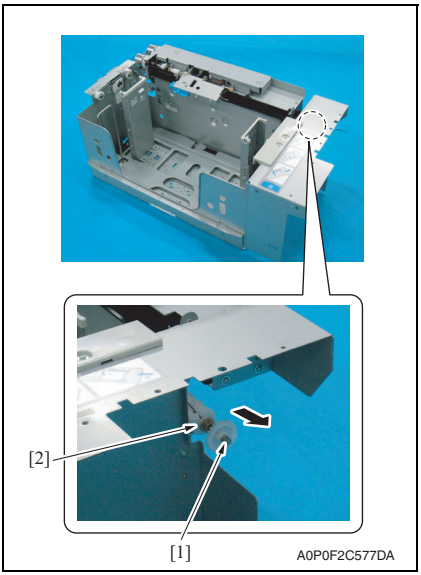

5. Remove the gear [1] and the bearing [2].

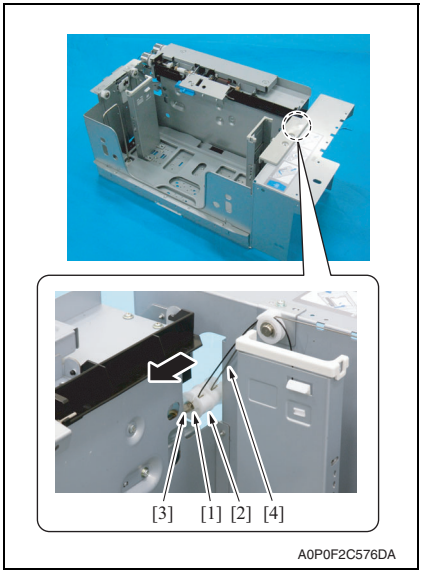

6. Remove the E-ring [1] and slide the drive pulley [2] in the arrow-marked direction to remove the wire /2 (white) [4] from the shaft [3].

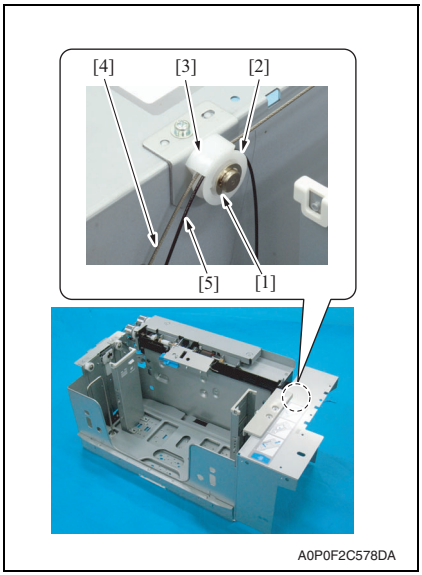

7. Remove the E-ring [1].
8. Remove the pulley [2] and the wire restraining cover [3], and then remove the wire /2 (white) [4] and the wire /1 (black) [5].

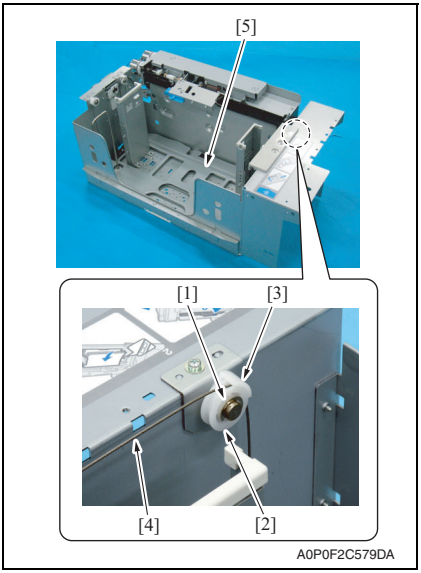

9. Remove the E-ring [1].
10. Remove the pulley [2] and the wire restraining cover [3], and then remove the wire /2 (white) [4].
11. Pull out and remove the wire /2 (white) toward the rear side of the lift plate [5].

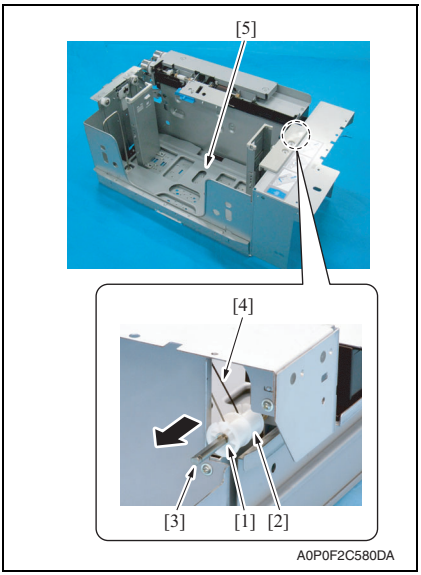

12. Remove the E-ring [1] and slide the drive pulley [2] in the arrow-marked direction to remove the wire /1 (black) [4] from the shaft [3].
13. Pull out and remove the wire /1 (black) toward the rear side of the lift plate [5].

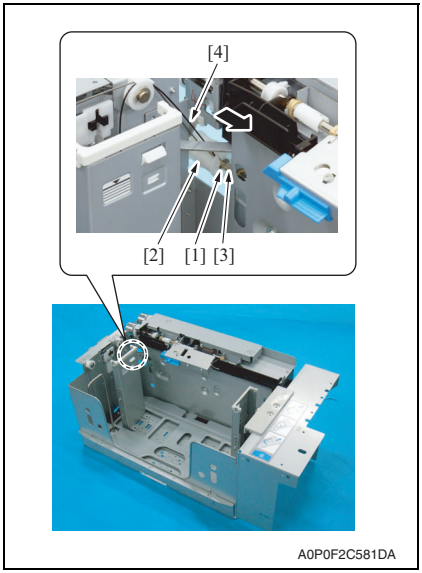

14. Remove the E-ring [1] and slide the drive pulley [2] in the arrow-marked direction to remove the wire /3 (black) [4] from the shaft [3].

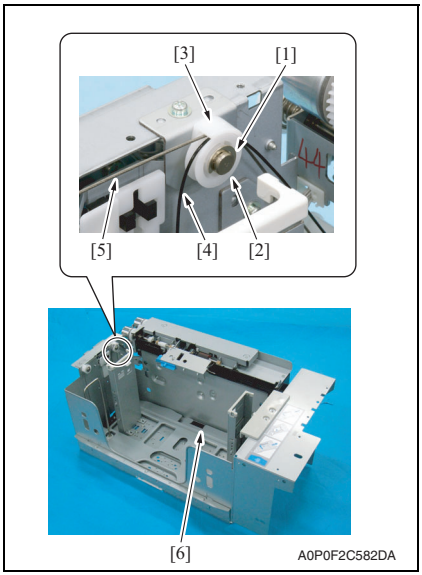

15. Remove the E-ring [1].
16. Remove the pulley [2] and the wire restraining cover [3], and then remove the wire /3 (black) [4] and the wire /4 (white) [5].
17. Pull out and remove the wire /3 (black) toward the rear side of the lift plate [6].

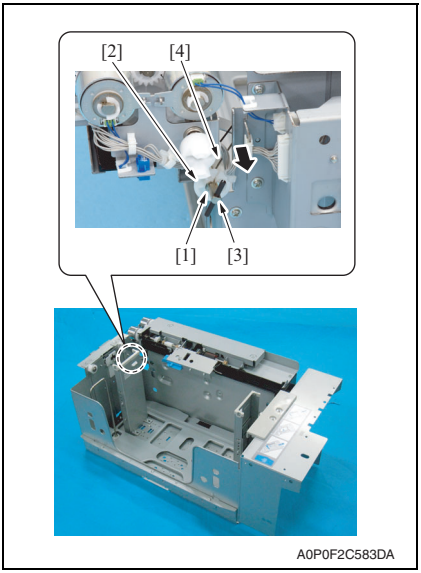

18. Remove the E-ring [1] and slide the drive pulley [2] in the arrow-marked direction to remove the wire /4 (white) [4] from the shaft [3].

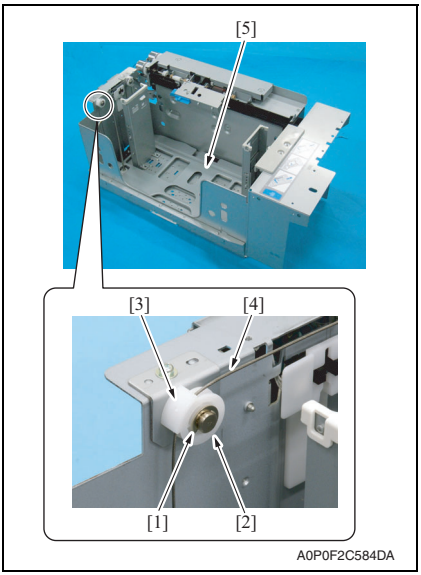

19. Remove the E-ring [1].
20. Remove the pulley [2] and the wire restraining cover [3], and then remove the wire /4 (white) [4].
21. Pull out and remove the wire /4 (white) toward the rear side of the lift plate [5].
22. To reinstall, reverse the order of removal.

NOTE

- **The same front/rear wires are used for both white and black.**

5.6 Cleaning procedure

NOTE

- **The alcohol described in the cleaning procedure represents the ethanol isopropyl alcohol.**

5.6.1 Transfer belt unit

1. Remove the transfer belt unit.
See P.46

2. Using a dried cleaning pad, wipe the transfer belt [1].

NOTE

- **If it is difficult to clean with dried cleaning pad, dampen a cleaning pad with a solvent.**
- **Do not wipe out with water.**
- **When solvent is used to dampen a cloth, do not use the ones other than shown below:**
  Isopropyl alcohol
- **After cleaned with the solvent, make copies more than 28-piece of A3 white paper to eliminate the image noise.**

5.6.2 Tray 1 feed roller/tray 1 pick-up roller

1. Open the manual bypass tray door.
2. Remove the tray 1 separation roller assy.
See the steps 1 to 2 of tray 1 separation roller assy replacement procedure.
See P.56
3. Slide out the tray 1.

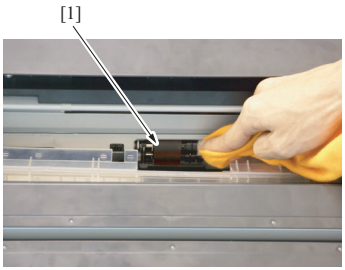

4. Using a cleaning pad dampened with alcohol, wipe the tray 1 feed roller [1] clean of dirt.

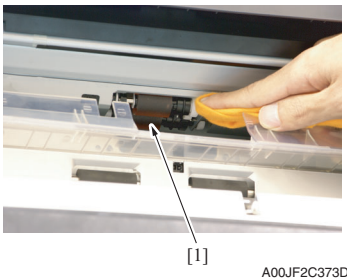

5. Using a cleaning pad dampened with alcohol, wipe the tray 1 pick-up roller [1] clean of dirt.

5.6.3 Tray 1 separation roller

1. Remove the tray 1 separation roller assy.
See the steps 1 to 2 of tray 1 separation roller assy replacement procedure.
See P.56

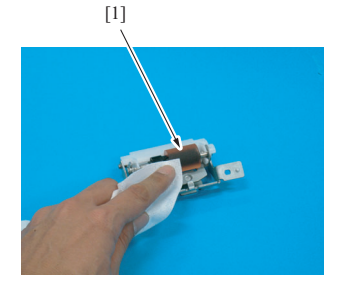

2. Using a cleaning pad dampened with alcohol, wipe the tray 1 separation roller [1] clean of dirt.

5.6.4 Tray 1 transport roller

1. Open the manual bypass tray door.

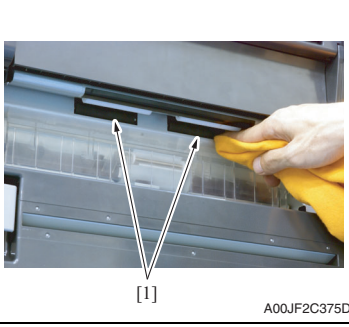

2. Using a cleaning pad dampened with alcohol, wipe the tray 1 transport roller [1] clean of dirt.

5.6.5 Tray 2 feed roller/tray 2 pick-up roller

1. Open the lower right door.
2. Remove the tray 2 separation roller assy.
   See the steps 1 to 2 of tray 2 separation roller assy replacement procedure.
   See P.60
3. Slide out the tray 2.

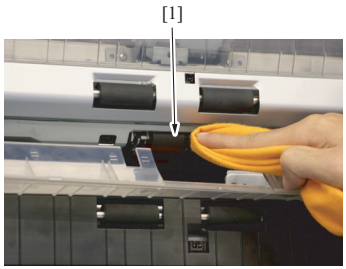

A00JF2C376DA

4. Using a cleaning pad dampened with alcohol, wipe the tray 2 feed roller [1] clean of dirt.

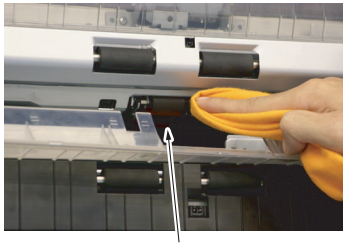

A00JF2C377DA

5. Using a cleaning pad dampened with alcohol, wipe the tray 2 pick-up roller [1] clean of dirt.

5.6.6 Tray 2 separation roller

1. Remove the tray 2 separation roller assy.
   See the steps 1 to 2 of tray 2 separation roller assy replacement procedure.
   See P.60

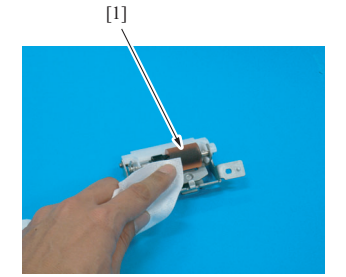

A0P0F2C569DA

2. Using a cleaning pad dampened with alcohol, wipe the tray 2 separation roller [1] clean of dirt.

5.6.7 Tray 2 transport roller

1. Open the lower front door.

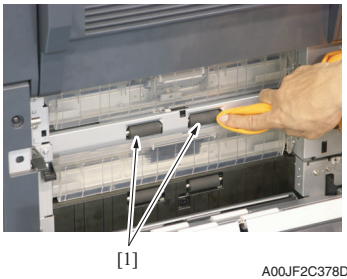

2. Using a cleaning pad dampened with alcohol, wipe the tray 2 transport roller [1] clean of dirt.

5.6.8 Tray 3 feed roller/tray 3 pick-up roller

1. Slide out the tray 3.

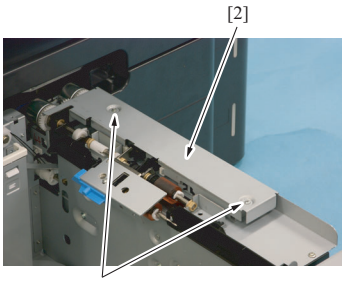

2. Remove two screws [1], and remove the tray 3 paper feed cover [2].

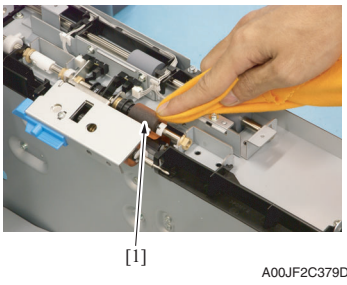

3. Using a cleaning pad dampened with alcohol, wipe the tray 3 feed roller [1] clean of dirt.

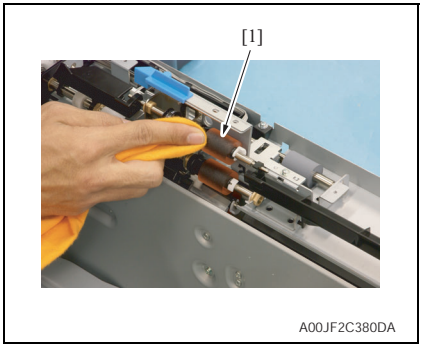

4. Using a cleaning pad dampened with alcohol, wipe the tray 3 pick-up roller [1] clean of dirt.

5.6.9 Tray 3 separation roller

1. Remove the feed roller/pick-up roller assy.
See the steps 1 to 4 of tray 3 feed roller replacement procedure.
See P.61

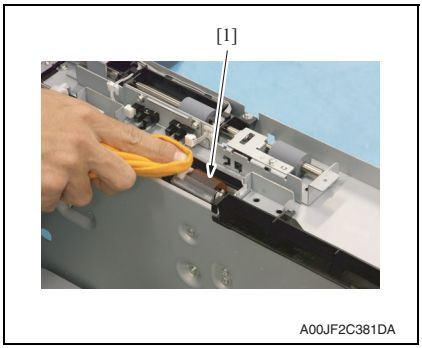

2. Using a cleaning pad dampened with alcohol, wipe the tray 3 separation roller [1] clean of dirt.

5.6.10 Tray 3 transport roller

1. Slide out the tray 3.

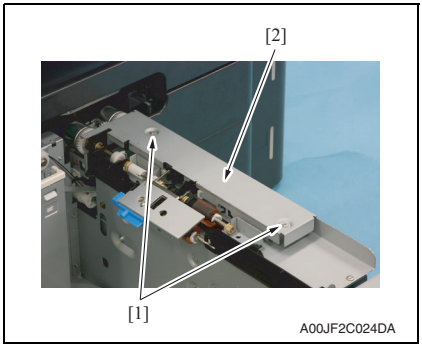

2. Remove two screws [1], and remove the tray 3 paper feed cover [2].

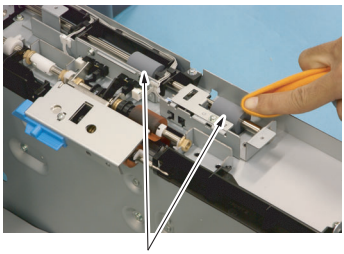

3. Using a cleaning pad dampened with alcohol, wipe the tray 3 transport roller [1] clean of dirt.

5.6.11 Tray 4 feed roller/tray 4 pick-up roller

1. Slide out the tray 4.

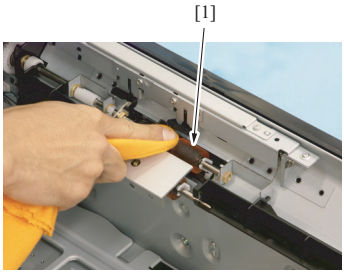

2. Using a cleaning pad dampened with alcohol, wipe the tray 4 feed roller [1] clean of dirt.

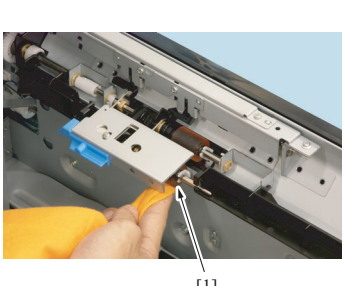

3. Using a cleaning pad dampened with alcohol, wipe the tray 4 pick-up roller [1] clean of dirt.

5.6.12 Tray 4 separation roller

1. Remove the feed roller/pick-up roller assy.
See the steps 1 to 4 of tray 4 feed roller replacement procedure.
See P.64

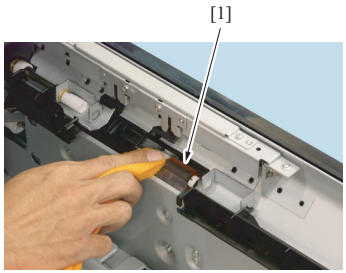

2. Using a cleaning pad dampened with alcohol, wipe the tray 4 separation roller [1] clean of dirt.

5.6.13 Tray 4 transport roller

1. Slide out the tray 4.

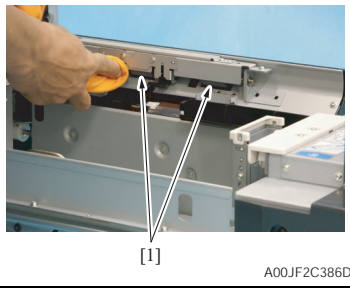

2. Using a cleaning pad dampened with alcohol, wipe the tray 4 transport roller [1] clean of dirt.

5.6.14 Manual bypass tray feed roller

1. Open the manual bypass tray door.

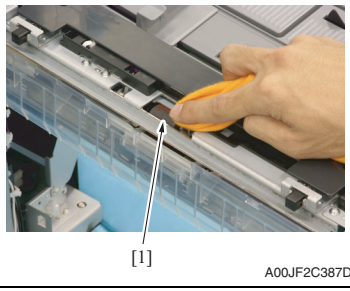

2. Using a cleaning pad dampened with alcohol, wipe the manual bypass tray feed roller [1] clean of dirt.

5.6.15 Manual bypass tray pick-up roller

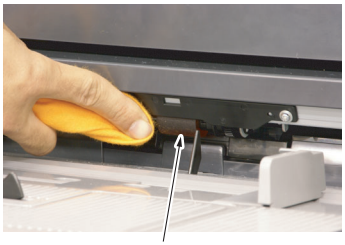

1. Using a cleaning pad dampened with alcohol, wipe the manual bypass tray pick-up roller [1] clean of dirt.

5.6.16 Manual bypass tray separation roller

1. Remove the manual bypass tray separation roller assy.
See the steps 1 to 2 of manual bypass tray separation roller assy replacement procedure.
See P.69

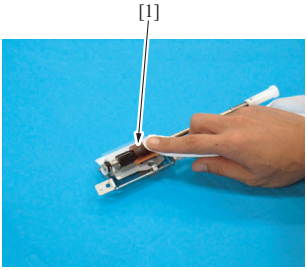

2. Using a cleaning pad dampened with alcohol, wipe the manual bypass tray separation roller [1] clean of dirt.

5.6.17 Intermediate transport roller

1. Open the lower right door.

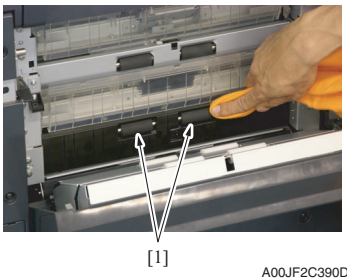

2. Using a cleaning pad dampened with alcohol, wipe the intermediate transport roller [1] clean of dirt.

5.6.18 Original glass

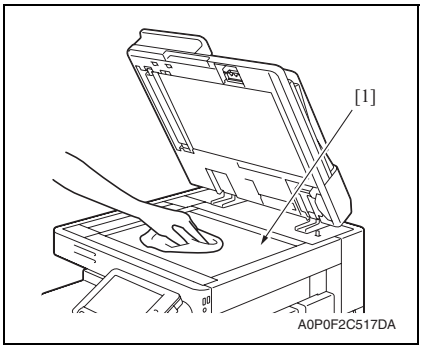

1. Using a cleaning pad dampened with alcohol, wipe the original glass [1] clean of dirt.

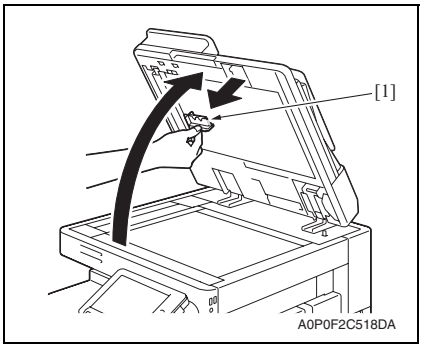

2. Open the ADF, and remove the cleaner [1]

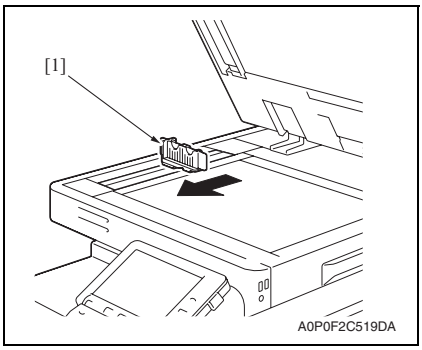

3. Clean the slit glass with the cleaner [1].

5.6.19 Scanner rails

1. Remove the original glass.
See P.89

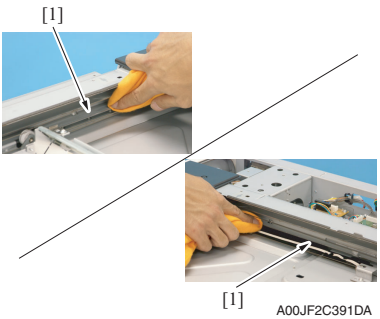

2. Using a cleaning pad dampened with alcohol, wipe the scanner rails [1] clean of dirt.

NOTE

- **Apply lubricant after cleaning.**

5.6.20 Mirrors (1st/2nd/3rd)

1. Remove the original glass.
See P.89

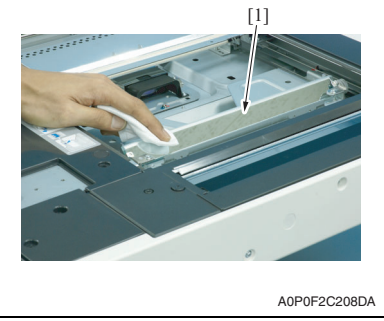

2. Using a cleaning pad dampened with alcohol, wipe the mirror 1/2/3 [1].

5.6.21 Lens

1. Remove the original glass.
See P.89

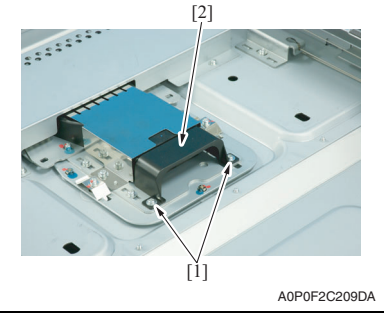

2. Remove two screws [1] and lens cover [2].

3. Using a cleaning pad dampened with alcohol, wipe the lens [1] clean of dirt.

5.6.22 CCD sensor

1. Remove the original glass.
See P.89

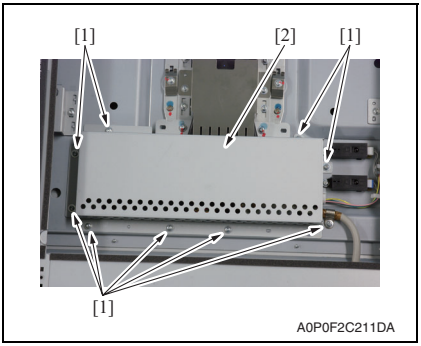

2. Remove nine screws [1], and remove the CCD board protective shield [2].

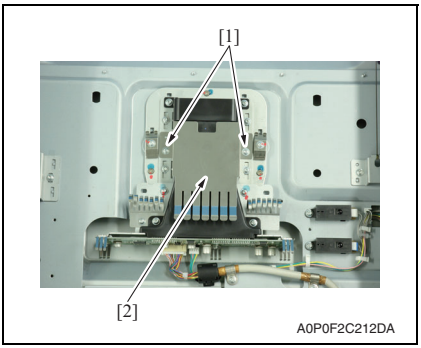

3. Remove two screws [1], and remove the ground plate [2].

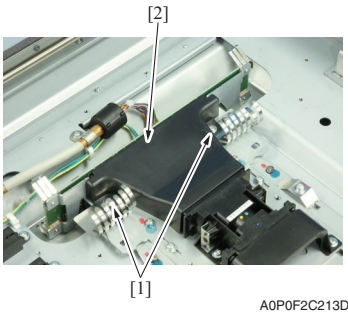

A0P0F2C213DA

4. Remove two screws [1], and remove the CCD sensor cover [2].

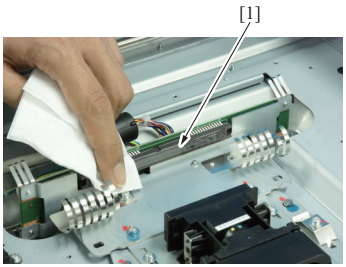

A0P0F2C214DA

5. Using a soft lint free cloth dampened with alcohol, wipe the CCD sensor [1] clean of dirt.

5.7 Lubrication procedure

5.7.1 Fusing unit

- When the fusing unit produces abnormal noise under operating conditions, lubricate the brush roller shaft and the sliding member of the bearings which can make the noise.

1. Remove the fusing unit
See P.71

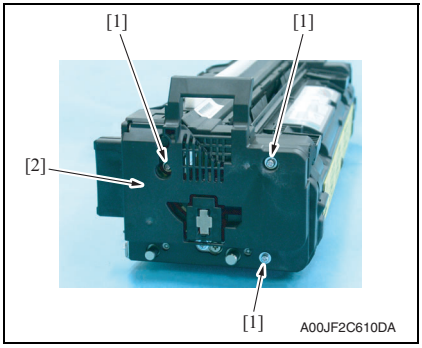

2. Remove three screws [1], and remove the fusing unit cover/1 [2].

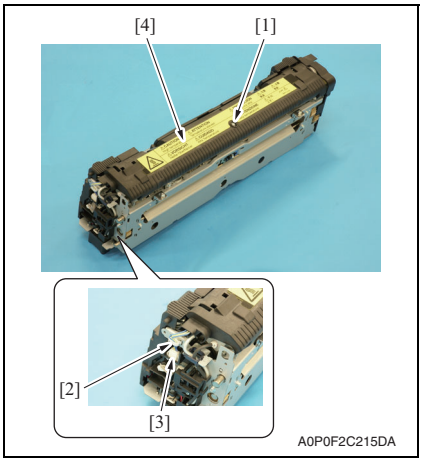

3. Remove the screw [1].
4. Remove the harness from the wire saddle [2] and disconnect the connector [3], and remove the fusing unit cover/2 [4].

5. Apply the heat resistant conductive grease (SANKOL ECG-25) to the surface [1] where the brush roller shaft contacts the bearings.

NOTE

- **Be sure to use heat-resistant conductive grease.**
- **Do not allow the grease to contact the brush roller.**
- **Do not disassemble any parts other than those described in the above procedure.**

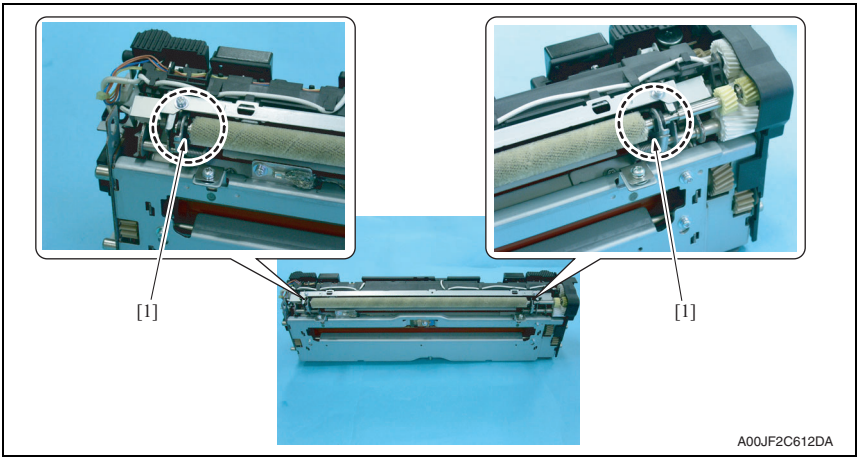

NOTE

- **Take care so that harness in the fusing unit does not get caught between parts when assembling the parts.**

6. SERVICE TOOL

6.1 Service material list

Name	Shape	Material No.	Remarks
Isopropyl alcohol	A00KF2C506DA	—	
SANKOL ECG-25 grease	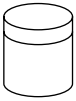 A00JF2C613DA	A00J PP00 ##	Heat-resistant conductive grease

6.2 CE tool list

Tool name	Shape	Quantity	Parts No.	Remarks
Original glass moving unit height adjustment jig	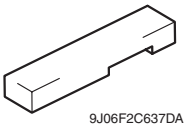 9J06F2C637DA	1	9J06 PJG0 ##	
PH window cleaning jig	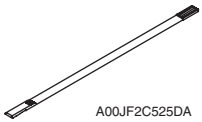 A00JF2C525DA	1	A00J R729 ##	This part number include the cleaning pad.
PH window cleaning jig pad	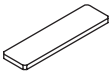 A00JF2C526DA	1	A00J 1098 ##	
Transfer belt unit extension rail	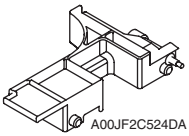 A00JF2C524DA	1	A00J R728 ##	
Slit glass cleaning jig	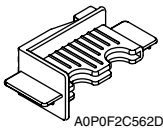 A0P0F2C562DA	1	A0HT R707 ##	

Tool name	Shape	Quantity	Parts No.	Remarks
Color chart	A0P0F2C553DA	1	9J06 PJP1 ##	A3
			9J06 PJP2 ##	11 x 17

7. FIRMWARE REWRITING

7.1 Outline

- There are two ways to update the firmware: One is by directly connecting with the main body using the USB memory device, and the other is by downloading over a network using the Internet ISW.

NOTE

- **When updating the firmware to the ver.4x, it is necessary to execute the following steps to update the firmware.**

1. Touch [BootRom] in the firmware update item display, and touch [START].
2. Check the message "BootRom Update completed successfully", and touch [OK].
3. Rewrite the firmware data.
4. Select [Service Mode] → [System 2] → [Data Install], and update the movie data to the new version.
   See P.543
5. When operating the machine with the function version 2, select [Service Mode] → [System 2] → [Software Switch Setting] and change the function version of the machine. (When operating the machine as the function version 1 on the firmware ver.4x, this setting is unnecessary.)
   See P.533
6. Turn OFF and ON the main power switch and sub power switch.
7. Install the loadable device driver.
   See P.631
8. Install the OCR dictionary data for the searchable PDF as occasion demands.
   See P.543

7.2 USB memory

7.2.1 Preparation

- Conditions for USB memory which can be used for updating the firmware are as follows:
  - Without security function added (security function can be turned off)
  - Memory with 1 GB to 2 GB are recommended (One with 4 GB or more may not operate)
  - Corresponds to USB2.0
  - Formatted with FAT32 type

7.2.2 Procedure

1. Connect the USB to the PC, and copy the firmware data to the USB memory.

NOTE

- **The firmware data to be updated must be copied to the root directory with the file name "A0P0FW. tar."**
- **More than one firmware data with a single model or multiple models can be stored in the USB memory. (Maximum of fifteen files)**
  When storing more than one firmware data, make a folder with a name "(model code) FW" ("A0P0FW" for this machine) right under the root directory.
  (File names can be set arbitrarily)
- **When making a folder and storing more than one firmware data, it is also necessary to copy the firmware data "A0P0FW. tar" to the root directly.**

2. Turn OFF the main power switch and the sub power switch.

3. Remove the screw [1].
4. Loosen the screw [2], and lift up the cover [3] of the USB port.
5. Insert the USB memory device to the USB port [4] for service.

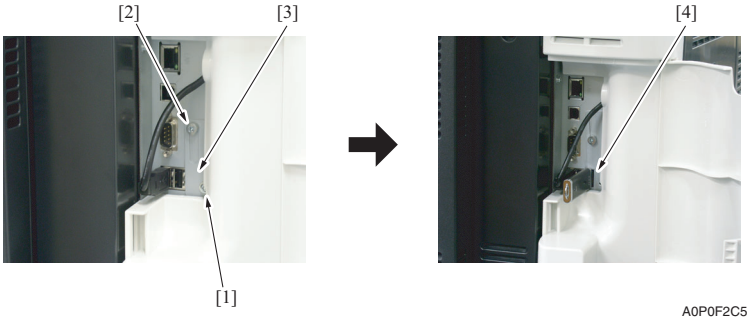

A0P0F2C570DA

NOTE

- **USB memory must be connected with the main power switch/sub power switch off.**
- **When updating the firmware, use the USB port for the service. It cannot be updated when connected to another USB port.**

6. Turn ON the main power switch and the sub power switch.
7. Control panel shows F/W items to be updated, and select the particular type of F/W to be updated. (Select [YES].)

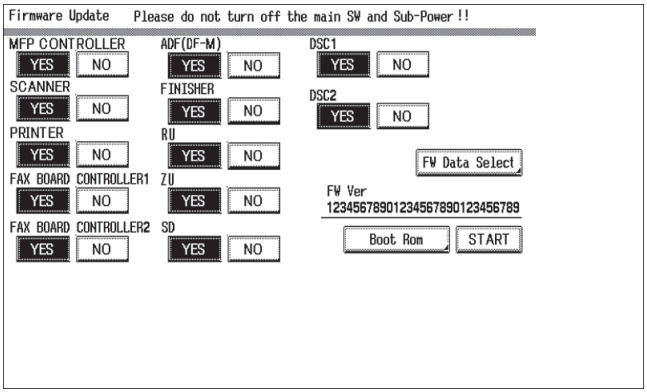

A0P0F2C539DB

F/W to be updated	Appropriate board	Remark
MFP CONTROLLER	MFP board (MFPB)	
SCANNER	MFP board (MFPB)	
PRINTER	Printer control board (PRCB)	
FAX BOARD CONTROLLER1	Fax board (Main)	Only when the FK-502 is mounted
FAX BOARD CONTROLLER2	Fax board (Sub)	Only when the FK-502 is mounted
ADF (DF-M)	DF control board (DFCB)	

	FINISHER	FNS control board (FSCB)	Only when the FS-526/527 is mounted
	RU	Transfer control board (TRCB)	
⚠1	ZU *1	ZU control board (ZUCB)	Only when the ZU-606 is mounted
⚠1	SD *2	SD drive board (SDDB)	Only when the SD-509 is mounted
⚠1	DSC1 *3	DSC board	Only when the SC-507 is mounted
⚠1	DSC2	Not used	

⚠1 *1: bizhub C652/C552 only
*2: bizhub C452 only
*3: In bizhub C652/C552, this is displayed only when the function enhanced version 1 or later firmware is installed.

NOTE

- **Unless one of the keys on the control panel is pressed, firmware is automatically updated after 30 seconds when the main power switch/sub power switch is turned on.**
- **When the BootRom file is in the firmware data, [RootRom] key is displayed. Pressing the key updates data.**
- **When more than one firmware are stored in step 1, pressing [FW Data Select] enables selection. (Data of other models cannot be selected.)**
  (Data with * at the left top of data selection screen will be the default data copied to the root directly in the USB memory.)

8. Press the [START]. (At this time, the Start key starts blinking red.)
9. Check that the control panel shows the message indicating that the data has been rewritten correctly ([Downloading Completed]). Check also the check sum value ([Check Sum ####]) shown on the control panel. (The Start key lights blue.)
10. Turn OFF the main power switch and the sub power switch.
11. Remove the USB memory device, and fix the cover of the USB port using a screw.
12. Turn ON the main power switch and the sub power switch.

NOTE

- **When turning the main power switch ON for the first time after the firmware is updated, data may sometimes be internally updated.**
  In that case, the following message will be displayed. Never turn the main power switch OFF until either the serial number input screen or the trouble code screen is displayed.

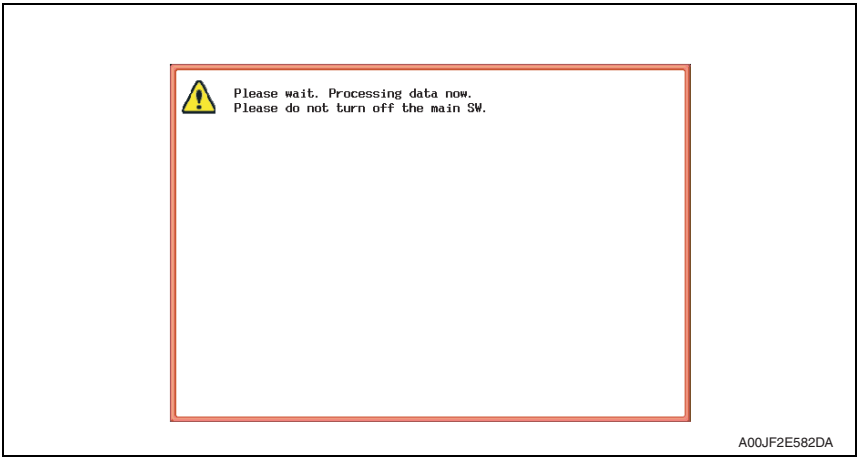

13. Call the Service Mode to the screen.
14. Select [Firmware Version].
15. Make sure if the version of firmware is updated.

7.2.3 Action when data transfer fails

- If “NG” appears on the control panel, indicating that rewriting has been unsuccessful (in which case the Start key lights up red), take the following steps.

1. Perform the data rewriting procedure again.
2. If the procedure is abnormally terminated, change the USB memory for a new one and try another rewriting sequence.
3. If the procedure is still abnormally terminated, change the board that has caused “NG” and carry out data rewriting procedure.

F/W to be updated	Appropriate board	Remark
MFP CONTROLLER	MFP board (MFPB)	
SCANNER	MFP board (MFPB)	
PRINTER	Printer control board (PRCB)	
FAX BOARD CONTROLLER1	Fax board (Main)	Only when the FK-502 is mounted
FAX BOARD CONTROLLER2	Fax board (Sub)	Only when the FK-502 is mounted
ADF (DF-M)	DF control board (DFCB)	
FINISHER	FNS control board (FSCB)	Only when the FS-526/527 is mounted
RU	Transfer control board (TRCB)	
ZU *1	ZU control board (ZUCB)	Only when the ZU-606 is mounted
SD *2	SD drive board (SDDB)	Only when the SD-509 is mounted
DSC1 *3	DSC board	Only when the SC-507 is mounted
DSC2	Not used	

*1: bizhub C652/C552 only
*2: bizhub C452 only
*3: In bizhub C652/C552, this is displayed only when the function enhanced version 1 or later firmware is installed.

7.3 Updating the firmware with the Internet ISW

7.3.1 Outline

- [Internet ISW] is the system which gives the instruction for updating the firmware with the control panel of the main body, so the main body will automatically receive the firmware from the program server over a network for updating. With the Internet ISW, the firmware can be updated when the CE is at the user's without firmware data.

7.3.2 Service environment

The following conditions are necessary for using the Internet ISW function.

- The main body is connected to such a network environment that the firmware can be downloaded on the internet using the ftp or http protocol.

The "Internet ISW" will not operate under the following conditions.

- Main power switch is set to OFF.
- Sub power switch is set to OFF.
- When the following setting is set to "ON":
  [Administrator Setting] → [Security Setting] → [Enhanced Security Mode]
- Machine is operating, or there are jobs present (including appointed jobs).
- Machine is in idle with suspended job
- Paper jam has occurred
- Image file is in the memory
- Model or the circuit board of the program does not match

7.3.3 Preparations for firmware rewriting

- For using the Internet ISW, the network parameter, program server address as well as firewall address need to be set to the main body.
- For details of each setting item, refer to Adjustment/Setting "Internet ISW".
  See P.615

A. Internet ISW Set

1. Call the Service Mode to the screen.
2. Touch [Internet ISW Set] which is available from [Internet ISW].

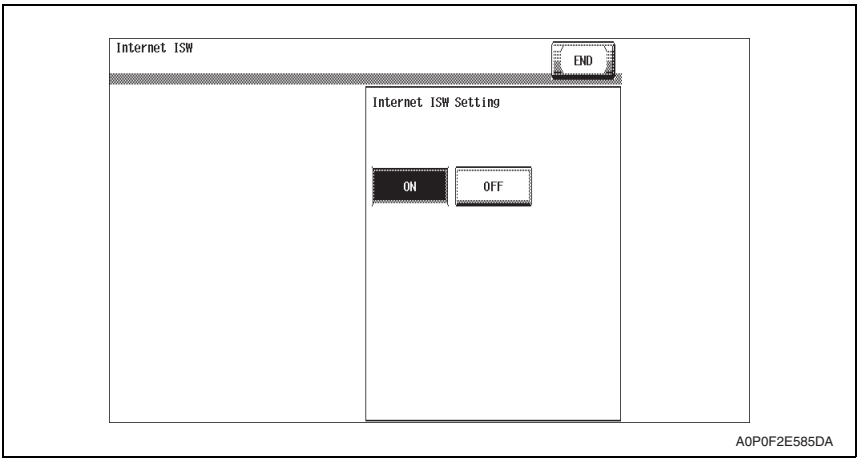

3. Touch [ON], and touch [END].

NOTE
- **Settings such as server setting, etc. will be available by selecting "ON" on this setting.**
- **When the following setting is set to "ON", "ON" cannot be selected on this setting. [Administrator Setting] → [Security Setting] → [Enhanced Security Mode]**

B. Protocol setting
- **It performs the setting concerning the protocol (ftp or http) for connecting to the Internet ISW.**
- **When connecting to the program server using a proxy server, perform the setting for a proxy server.**

Step	Connecting by http	Connecting by ftp
0	Select [Internet ISW] which is available from [Service Mode].	
1	Data Input Setting • Touch [HTTP Setting], and select [ON].	Data Input Setting • Touch [FTP Setting], and select [ON].
2	Connect Proxy • For connecting via proxy server, select [ON].	
3	Proxy Server • For connecting via proxy server, set the proxy server address and the port number. *1.* Select the [Server Address], and set the proxy server address by IP addressing scheme or FQDN scheme. *2.* Select [Port Number], and set the port number for the proxy server from 1 through 65535.	
4	Proxy Authentication • Set the login name and the password which may be necessary for authentication when accessing to the proxy server. *1.* When Authentication is necessary for accessing to the proxy server, select [Authentication], and select [ON]. *2.* Select [Log-in Name], and enter the login name on the on-screen keyboard. *3.* Select [Password], and enter the password on the on-screen keyboard.	Connection Setting • Perform the setting for accessing FTP server. *1.* Select [Port Number], and set the port number for FTP server from 1 through 65535. *2.* Select [Connection Time Out], and set the time for the connection time out from 1 through 60. *3.* When connecting in PASV mode, select [PASV Mode], and select [ON]. *PASV Mode: This mode is for transferring the file with FTP under the condition where communication is restricted such as inside the firewall. Since with PASV mode, the client with restriction sets the port number, data transmission port can be secured to enable the file transmission.
5	Connection Time-Out • Select [Connection Time-Out], and set the time for the connection time out between 30 and 300 seconds.	—

C. Forwarding access setting

- To make the access setting for the program server which stores the firmware data.

1. Select [Internet ISW] which is available from [Service Mode].
2. Touch [Forwarding Access Setting].

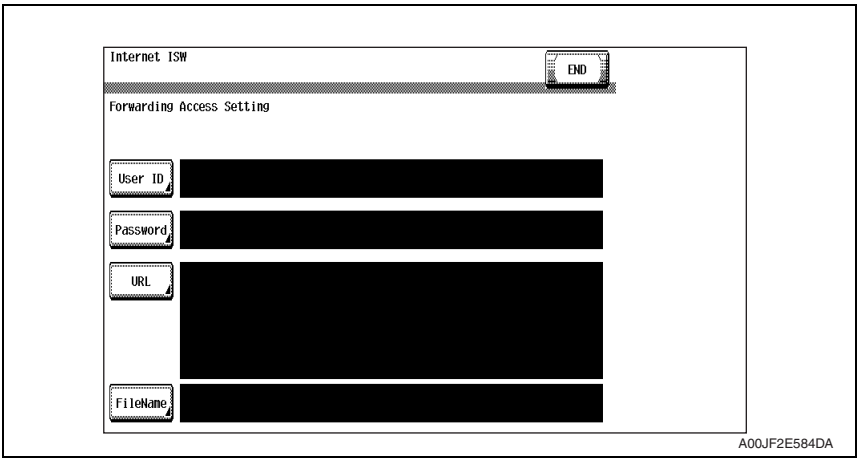

3. Select [User ID], and enter the user ID which is necessary for connecting to the program server on the on-screen keyboard, and touch [END].
4. Select [Password], and enter the password which is necessary for connecting to the program server on the on-screen keyboard, and touch [END].
5. Select [URL], and enter the directory which stores the program server address and the firmware on the on-screen keyboard by URL method, and touch [END].

NOTE

- **Enter the URL which matches to the protocol to be used.**

When connecting to http		**http:///(host name or IP address)/directory name**
	or	**https:///(host name or IP address)/directory name**
When connecting to ftp		**ftp:///(host name or IP address)/directory name**

6. Select [File Name], and enter the file name of the firmware data to be downloaded on the on-screen keyboard, and touch [END].
7. Touch [END] to finish setting.

7.3.4 Firmware rewriting from the control panel

NOTE

- **When performing the Internet ISW, ask the administrator for permission beforehand.**
- **DO NOT turn OFF the main/sub power switch while downloading.**

A. Conducting rewriting on the control panel.

1. Perform the following setting.
   [Service Mode] → [Internet ISW] → [Download]
2. Touch [ISW Start].

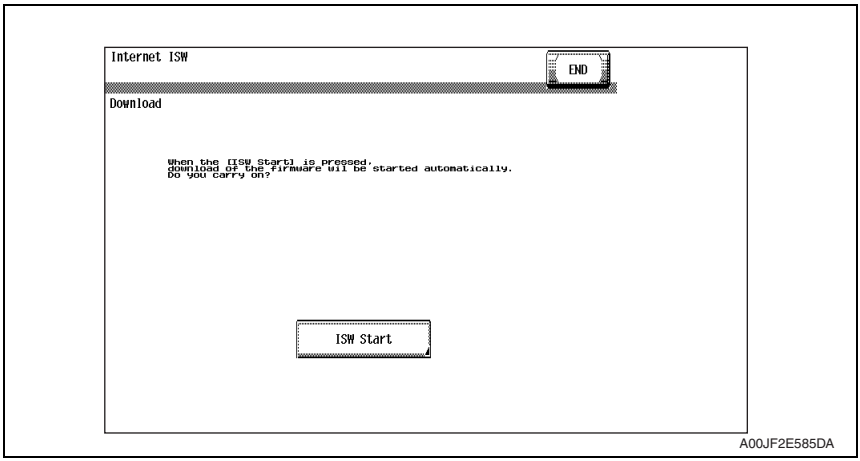

3. The main body will automatically start running, and it starts accessing the server.

4. Control panel shows F/W items to be updated, and select the particular type of F/W to be updated. (Select [YES].)

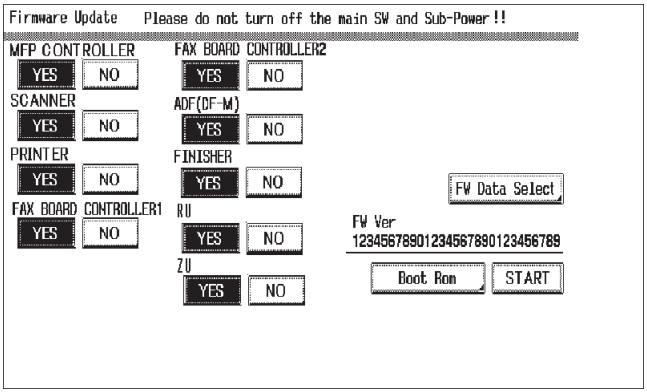

A0P0F2C539DA

F/W to be updated	Appropriate board	Remark
MFP CONTROLLER	MFP board (MFPB)	
SCANNER	MFP board (MFPB)	
PRINTER	Printer control board (PRCB)	
FAX BOARD CONTROLLER1	Fax board (Main)	Only when the FK-502 is mounted
FAX BOARD CONTROLLER2	Fax board (Sub)	Only when the FK-502 is mounted
ADF (DF-M)	DF control board (DFCB)	
FINISHER	FNS control board (FSCB)	Only when the FS-526/527 is mounted
RU	Transfer control board (TRCB)	
ZU *1	ZU control board (ZUCB)	Only when the ZU-606 is mounted
SD *2	SD drive board (SDDB)	Only when the SD-509 is mounted
DSC1 *3	DSC board	Only when the SC-507 is mounted
DSC2	Not used	

*1: bizhub C652/C552 only
*2: bizhub C452 only
*3: In bizhub C652/C552, this is displayed only when the function enhanced version 1 or later firmware is installed.

NOTE

- **Unless one of the keys on the control panel is pressed, firmware is updated after 30 seconds when the unit has restarted.**

B. During firmware updating

1. The message to indicate the status will be displayed on the screen while connecting or transferring data.

C. Completed or failed

(1) Firmware updated normally

1. When the Firmware is normally updated, restart the main body in auto or manual mode to display the outcome, and touch [OK] to return to the main screen.

(2) Failing to update the firmware due to the network trouble

1. When updating failed to complete due to the trouble on connecting to the network, an error code and the message will be displayed.
2. Restart the main body in auto or manual mode, and touch [OK]. It can be used with the firmware version before conducting updating.
3. Check the settings for the network by error codes, and try updating again.

NOTE

- **For error codes, refer to "Error code list for the Internet ISW".**
  See P.242

(3) Failing to update the firmware after downloading has started

1. Once firmware updating has started, the ROM in the main body will be deleted. When it failed right after updating has started, restart the main body, and shift to the standby screen to retry downloading.
2. When updating on the control panel, touch [settings] on the standby screen, and check the Network settings again.
   Touch [Download], and restart the Internet ISW.

NOTE

- **Return to the standby screen without fail after turning the main power switch OFF/ ON if the firmware is not updated.**
- **Firmware can be updated with the USB memory with the main power switch OFF.**

D. Confirming the firmware version

1. Call the Service Mode to the screen.
2. Select the [Firmware Version].
3. Check if the firmware version is updated.

7.3.5 Firmware rewriting from the CS Remote Care

- For detailed error information relating to CS Remote Care, refer to "Adjustment/Setting: CS Remote Care."
  See P.491
- For the firmware update procedure using CS Remote Care, refer to CS Remote Care Center Manual.

7.3.6 Error code list for the Internet ISW

- When a trouble occurred while conducting the Internet ISW and it was not normally connected, the message on the status and the error code will be displayed on the control panel.
  When updating with CS Remote Care, the error code will be sent to the CS Remote Care center.

<Sample display>

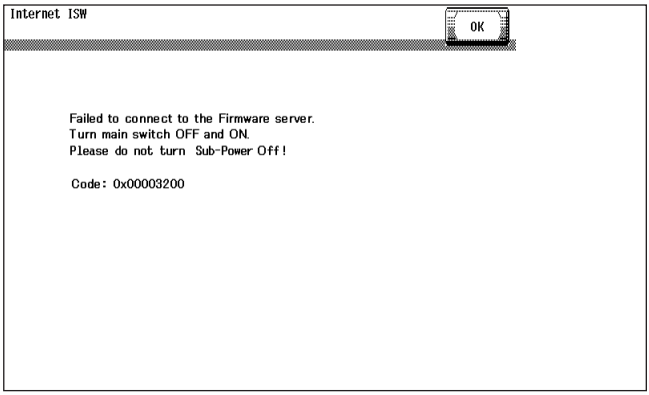

A00JF2C556DA

Error code Control panel	Description	Countermeasure
0x00000001	Illegal error on the control	• Check if the following setting is set to "Valid". [Service Mode] → [Internet ISW] → [Internet ISW setting] • Check the status of the following setting. [Service Mode] → [Internet ISW] → [Transfer access setting] • If the above process does not solve the problem, inform the corresponding error code to the KONICA MINOLTA.
0x00000010	Parameter error	• Check if the following setting is set to "Valid". [Service Mode] → [Internet ISW] → [Internet ISW setting] • If the above process does not solve the problem, inform the corresponding error code to KONICA MINOLTA.

Error code Control panel	Description	Countermeasure
0x00111000	Error concerning the network • Connection has been completed.	• Check the User's network environment. (LAN cable's connection) • Check the status of the following setting. [Service Mode] → [Internet ISW] → [Transfer access setting] • Check to see if the FTP server operates normally.
0x00111001	Error concerning the network • It cannot be connected to the server.	• Check the network environment of the User. • Check to see if the FTP server operates normally.
0x00111100	Error concerning the network • Communication timeout.	
0x00111101	Error concerning the network • Disconnection occurred	• Check the network environment of the User. • Check to see if the FTP server operates normally.
0x00111110	Error concerning the network • The network is not connected.	
0x00110010	Error concerning the network • Others	
0x00001###	FTP error • Reply code when it failed to be connected	• Check to see if FTP server normally operates. • Check the IP address, user's name, etc.
0x00002###	FTP error • Error reply code for the user command or pass command	• Check to see if FTP server operates normally.
0x00003###	FTP error • Error reply code for CWD command	
0x00004###	FTP error • Error reply code for the TYPE command.	• Check to see if FTP server operates normally.
0x00005###	FTP error • Error reply code for the PORT command.	
0x00006###	FTP error • Error reply code for the PASV command.	• Check to see if FTP server operates normally. • Set the PASV mode to "Invalid", and try it again.
0x00007###	FTP error • Error reply code for the RETR command.	• Check to see if FTP server operates normally. • Wait for about 30 minutes and try it again.
0x1000 0100	• It cannot be accepted because of the job currently being executed. • ISW being executed by other method.	• Wait for the current job to be completed and try it again.
0x10000101	• It cannot be accepted because the sub power switch is OFF.	• Turn sub power switch ON and try it again.
0x10000102	• The Internet ISW is already being executed.	• Wait for the current Internet ISW to be completed.

Error code Control panel	Description	Countermeasure
0x10000103	• It failed to prohibit the job. (It failed to lock the operation.) → It failed to lock the job because the operation is already locked with PSWC, etc.	• Check if the following setting is set to "Valid". [Service Mode] → [Internet ISW] → [Internet ISW setting] • If the above process does not solve the problem, inform the corresponding error code to the KONICA MINOLTA.
0x10000104	• There is no space for F/W data to be downloaded.	
0x10000106	• Check sum error	
0x10000107	File access error • The file downloaded has an error. • The header of the file which has been read has an error. • The size of the file to be downloaded is too large. • When it is identified to be the different type of F/W.	• Check to see if the downloaded F/W is of the correct type.
0x10000108	• The area F/W is stored is destroyed, and another ISW is necessary.	• Wait until ISW is automatically executed on MFP side.
0x20000000	The temporary error when running the subset • When starting the Internet ISW in a normal program, the rebooting will start and the Internet ISW will be executed with the subset program. During the process by the subset program, it has to be in the "Failed" status unless the Internet ISW is successfully conducted. This code is used temporarily to make it in error status.	

8. COMMERCIALLY AVAILABLE PARTS

8.1 Installing the key counter

8.1.1 Configuration

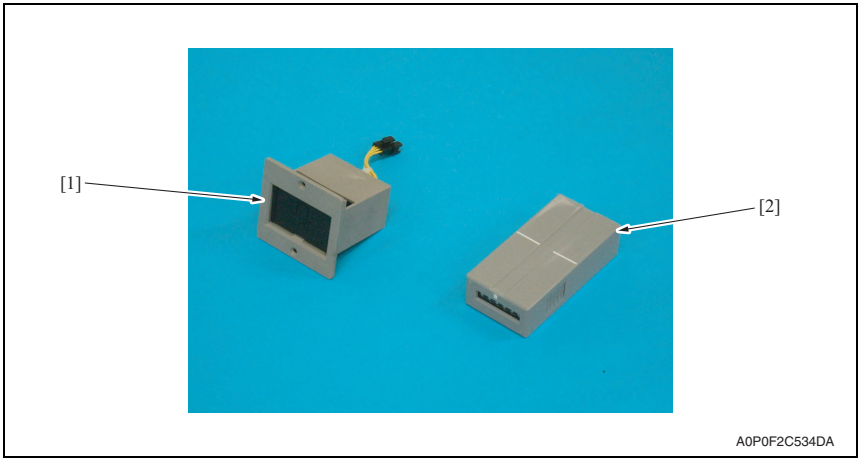

[1]	Key counter socket	[2]	Key counter

8.1.2 Procedure

NOTE

- **When mounting the key counter, either the optional key counter kit KIT-1 (4623-472) or the key counter kit KIT-CF (4623-481) is necessary.**
- **Procedure for directly mounting the key counter to the main unit is described below.**
  For mounting the key counter to the optional working table WT-506, refer to WT-506 installation manual.

A. When using the key counter kit KIT-1 (4623-472)

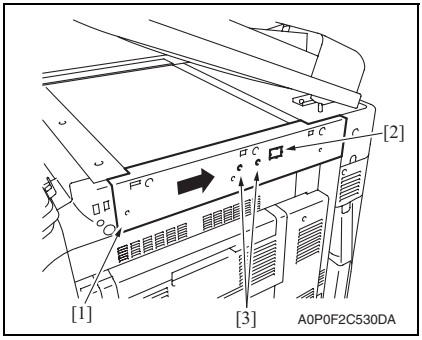

1. Remove the scanner right cover [1]. See P.85
2. Cut out the knockouts [2] of the scanner right cover.
3. Remove the two caps [3].

4. Open the upper right door.

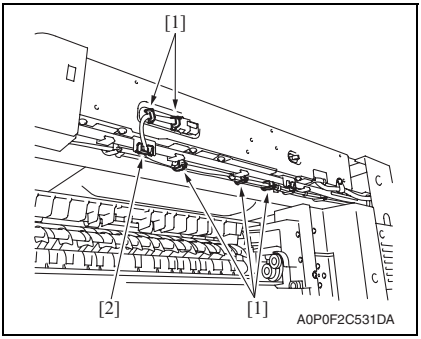

5. Remove the harness for the key counter from five wire saddles [1] and the edge cover [2].

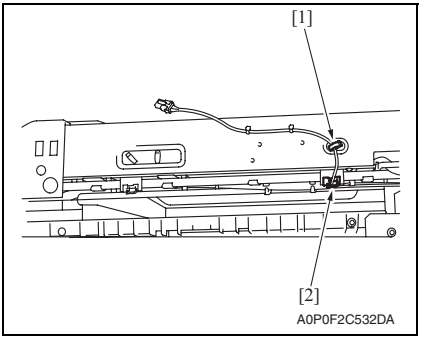

6. Set the harness for the key counter to the wire saddle [1] and the edge cover [2].

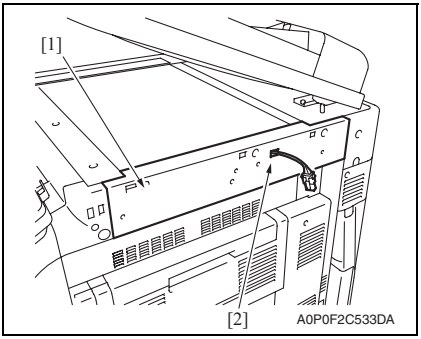

7. Mount the scanner right cover [1], and insert the harness for the key counter through the hole [2] knock-outs were removed from.

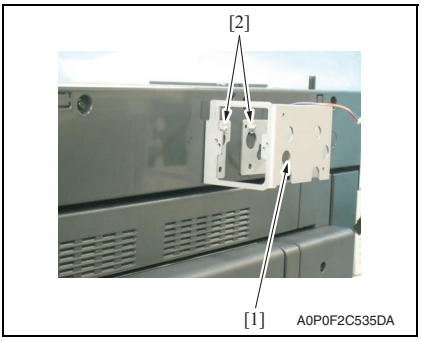

8. Using two screws [2], secure the counter mounting bracket [1].

NOTE

- **Secure the counter mounting bracket passing the connector into the bracket.**
- **Use the two long screws (9646 0418 14: M4 x 18) in the key counter kit to secure the counter mounting bracket.**

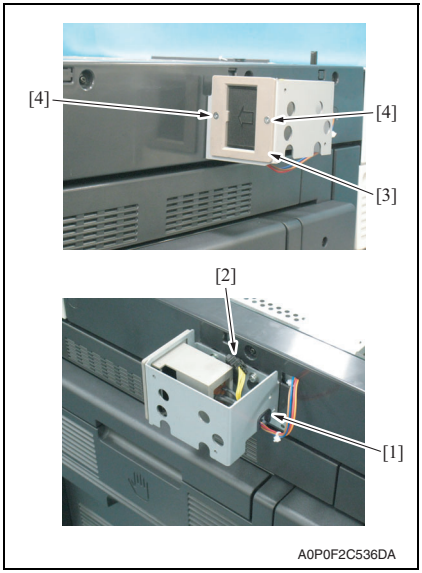

9. Mount the edge cover [1] to the counter mounting bracket and set the harness to the edge cover.
10. Connect the key counter socket connector [2].
11. Using two screws [4], secure the counter socket [3].

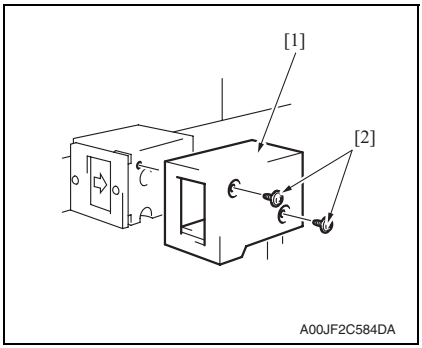

12. Using two screws [2], secure the key counter cover [1].

13. Select [Service Mode] → [Billing Setting] → [Management Function Choice] → [Key Counter Only], [Vendor 1 + Key Counter] or [Vendor 2 + Key Counter].
Set color mode and message.
For details on setting, see “Adjustment/Setting.”
See P.630

B. When using the key counter kit KIT-CF (4623-481)

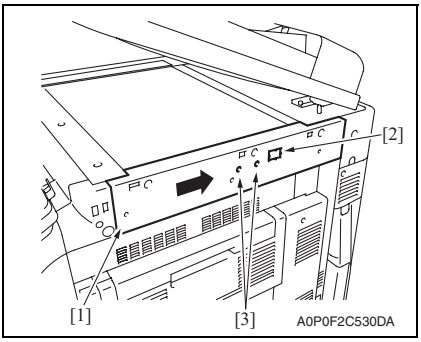

1. Remove the scanner right cover [1]. See P.85
2. Cut out the knockouts [2] of the scanner right cover.
3. Remove the two caps [3].

4. Open the upper right door.

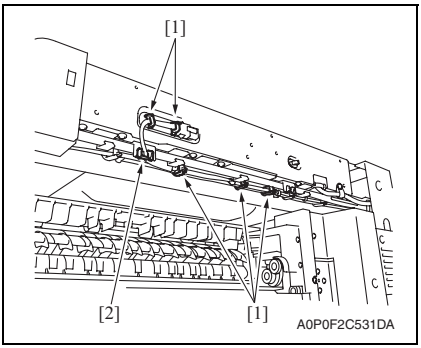

5. Remove the harness for the key counter from five wire saddles [1] and the edge cover [2].

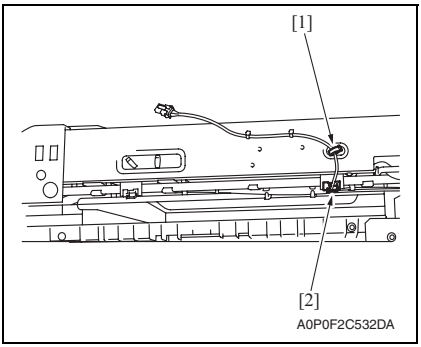

6. Set the harness for the key counter to the wire saddle [1] and the edge cover [2].

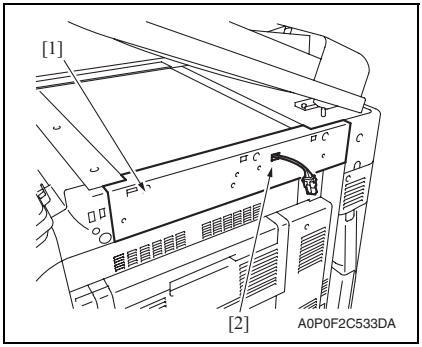

7. Mount the scanner right cover [1], and insert the harness for the key counter from the hole [2] where knockouts were removed from.

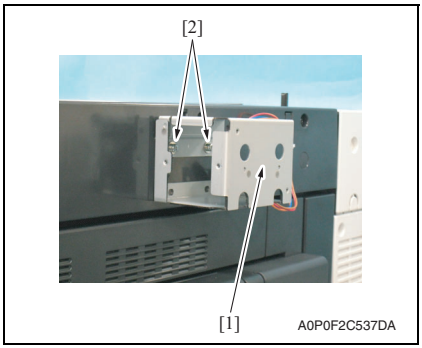

8. Using two screws [2], secure the counter mounting bracket [1].

NOTE

- **Secure the counter mounting bracket passing the connector into the bracket.**
- **Use the two long screws (9646 0418 14: M4 x 18) in the key counter kit to secure the counter mounting bracket.**

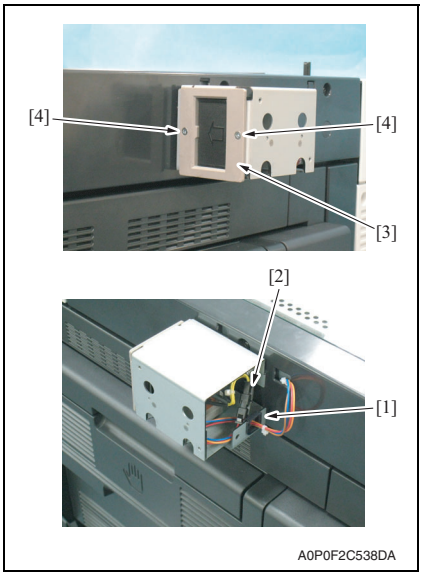

9. Mount the edge cover [1] to the counter mounting bracket, and set the harness to the edge cover.

10. Connect the key counter socket connector [2].

11. Using two screws [4], secure the counter socket [3].

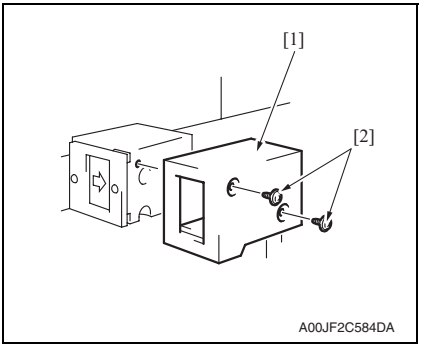

12. Using two screws [2], secure the key counter cover [1].

13. Select [Service Mode] → [Billing Setting] → [Management Function Choice] → [Key Counter Only], [Vendor 1 + Key Counter] or [Vendor 2 + Key Counter].
Set color mode and message.
For details on setting, see “Adjustment/Setting.”
See P.630

8.2 Installing the original size detection 2 sensor (PS205)

8.2.1 Procedure

1. Remove the original glass.
See P.89

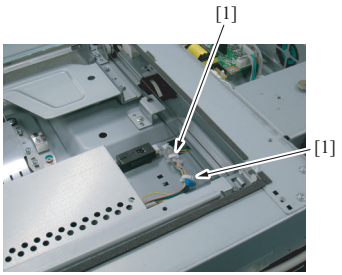

A0P0F2E586DA

2. Remove the harness from two wire saddles [1].

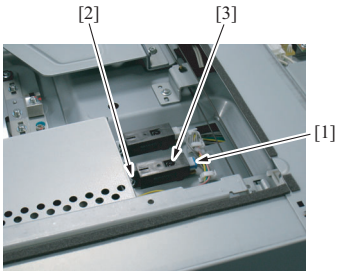

A0P0F2E587DA

3. Connect the connector [1] of the original size detection 2 sensor.
4. Using the screw [2], mount the original size detection 2 sensor [3] and fix it.

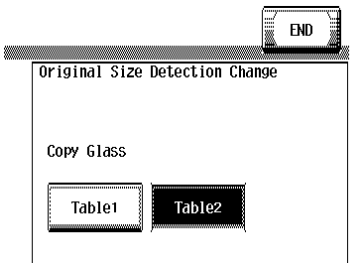

A00JF2E587DA

5. Select [Service Mode] → [System 1] → [Original Size Detection], and set the original glass to [Table2].

6. Select [Service Mode] → [Machine] → [Org. Size Detecting Sensor Adj].
See P.464

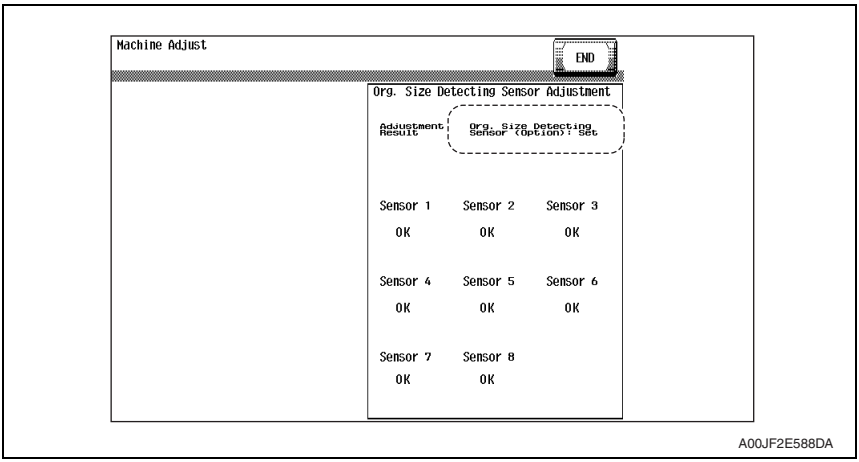

7. Check to make sure that the [Org. Size Detecting Sensor (Option): Set] is displayed on the original size detection sensor adjustment screen.

ADJUSTMENT/SETTING

9. HOW TO USE THE ADJUSTMENT/SETTING SECTION

- "Adjustment/Setting" contains detailed information on the adjustment items and procedures for this machine.
- Throughout this "Adjustment/Setting," the default settings are indicated by " ".

Advance checks

- Before attempting to solve the customer problem, the following advance checks must be made. Check to see if:

- The power supply voltage meets the specifications.
- The power supply is properly grounded.
- The machine shares the power supply with any other machine that draws large current intermittently (e.g., elevator and air conditioner that generate electric noise).
- The installation site is environmentally appropriate: high temperature, high humidity, direct sunlight, ventilation, etc.; levelness of the installation site.
- The original has a problem that may cause a defective image.
- The density is properly selected.
- The original glass, slit glass, or related part is dirty.
- Correct paper is being used for printing.
- The units, parts, and supplies used for printing (developer, PC drum, etc.) are properly replenished and replaced when they reach the end of their useful service life.
- Toner is not running out.

⚠ CAUTION

- **To unplug the power cord of the machine before starting the service job procedures.**
- **If it is unavoidably necessary to service the machine with its power turned ON, use utmost care not to be caught in the scanner cables or gears of the exposure unit.**
- **Special care should be used when handling the fusing unit which can be extremely hot.**
- **The developing unit has a strong magnetic field. Keep watches and measuring instruments away from it.**
- **Take care not to damage the PC drum with a tool or similar device.**
- **Do not touch IC pins with bare hands.**

10. UTILITY

10.1 List of utility mode

NOTE

- **Keys displayed on screens are different depending on the setting.**
- **For displaying the keys with *, ** marks, see "Administrator Security Level."** See P.434
- **For displaying the keys with *** marks, see "Administrator Feature Level."** See P.621

Utility Mode					Ref. page
One-Touch/ User Box Registration	Create One-Touch destination	Address Book (Public)/ (Personal)	E-mail		P.270
			User Box		P.270
			Fax		P.270
			PC (SMB)		P.270
			FTP		P.271
			WebDAV		P.271
			IP Address Fax		P.271
			Internet Fax		P.271
		Group			P.271
		E-mail Settings	E-mail Subject		P.272
			E-mail Body		P.272
	Create User Box	Public/Personal User Box			P.272
		Bulletin Board User Box			P.273
		Relay User Box			P.273
	Limiting Access to Destina-tions	Apply Levels/ Groups to Destinations	Address Book		P.274
			Group		P.274
			Program		P.274
User Settings	System Settings	Language Selection			P.275
		Measurement Unit Settings			P.275
		Paper Tray Settings	Auto Tray Selection Settings		P.275
			Auto Tray Switch ON/OFF		P.275
			No Matching Paper in Tray Setting		P.275
			Print Lists		P.276
			Post Inserter Settings		P.276
		Auto Color Level Adjust.			P.276
		Power Save Settings*	Low Power Mode Settings*		P.277
			Sleep Mode Settings*		P.277
		Output Settings**	Print/Fax Out-put Settings**	Print**	P.277
				Fax**	
			Output Tray Settings**		P.278
		AE Level Adjustment**			P.278

Utility Mode				Ref. page
User Settings	System Settings	Auto Paper Select for Small Original		P.278
		Blank Page Print Settings**		P.279
		Page Number Print Position**		P.279
		Select Keyboard**		P.279
	Custom Display Settings	Copier Settings	Default Tab	P.280
			Shortcut Key 1	P.280
			Shortcut Key 2	
			Quick Settings 1	P.280
			Quick Settings 2	
			Quick Settings 3	
			Quick Settings 4	
		Scan/Fax Settings	Default Tab	P.281
			Program Default	P.281
			Address Book Index Default	P.281
			Shortcut Key 1	P.281
			Shortcut Key 2	
			Default Address Book	P.282
			Default Address Type	P.282
		User Box Settings	Default Tab	P.282
			Shortcut Key 1	P.282
			Shortcut Key 2	
		Copy Screen	Copy Operating Screen	P.283
		Fax Active Screen	TX Display	P.283
			RX Display	P.283
		Color Selection Settings		P.283
		Left Panel Display Default		P.284
		Search Option Settings		P.284
	Copier Settings	Auto Booklet ON when Fold & Staple		P.284
		Auto Zoom for Combine/Booklet		P.284
		Auto Sort/Group Selection		P.285
		Default Copy Settings		P.285
		Default Enlarge Display Settings		P.286
		When AMS Direction is Incorrect		P.286
		Separate Scan Output Method		P.286
		Enlargement Rotation		P.287
		Auto Zoom (Platen)*		P.287
		Auto Zoom (ADF)*		P.287
		Specify Default Tray when APS Off*		P.287
		Select Tray for Insert Sheet*		P.288
		Tri-Fold Print Side		P.288
		Print Jobs During Copy Operation**		P.288

Utility Mode				Ref. page
User Settings	Copier Settings	Automatic Image Rotation		P.288
		Finishing Program		P.289
1		Card Shot Settings	Layout	P.289
			Zoom	P.289
			Store Original Size	P.289
	Scan/Fax Settings	JPEG Compression Level		P.290
		Black Compression Level		P.290
		TWAIN Lock Time		P.290
		Default Scan/Fax Settings		P.291
		Default Enlarge Display Settings		P.291
		Compact PDF/XPS Compression Level		P.292
		Color TIFF Type		P.292
1		OCR Operation Setting		P.292
1		Graphic Outlining		P.292
	Printer Settings	Basic Settings	PDL Setting	P.293
			Number of Copies	P.293
			Original Direction	P.293
			Spool Print Jobs in HDD before RIP	P.293
			A4/A3 ↔ LTR/LGR Auto Switch	P.293
			Banner Sheet Setting	P.294
			Binding Direction Adjustment	P.294
			Line Width Adjustment	P.294
			Gray Background Text Correction	P.294
			Gray Background Text Correction (Fiery Controller)	P.295
		Paper Setting	Paper Tray	P.295
			Paper Size	P.295
			2-Sided Print	P.295
			Binding Position	P.296
			Staple	P.296
			Punch	P.296
			Banner Paper Tray	P.296
		PCL Settings	Font Settings	P.297
			Symbol Set	P.297
			Font Size	P.297
			Line/Page	P.297
			CR/LF Mapping	P.298

Utility Mode					Ref. page
User Settings	Printer Settings	PS Setting	Print PS Errors		P.298
			ICC Profile Settings	Photo-RGB Color	P.298
				Photo-Output Profile	
				Text-RGB Color	
				Text-Output Profile	
				Figure/Table Graph-RGB Color	
				Figure/Table Graph-Output Profile	
				Simulation-Profile	
			Auto Trapping		P.299
			Black Overprint		P.299
		XPS Settings	Verify XPS Digital Signature		P.299
		Print Reports	Configuration Page		P.300
			Demo Page		
			PCL Font List		
			PS Font List		
		TIFF Image Paper Setting			P.300
	Change Password				P.301
	Change E-mail Address				P.301
	Change Icon				P.301
1	Register Authentication Settings				P.302
1	Registered Application Setting	Default Application Selection			P.302
1	Cellular Phone/PDA Setting	Link File Error Notification			P.302
		Proxy Server Use			P.302
		Print Settings			P.302
Administrator Settings	System Settings	Power Save Settings	Low Power Mode Settings		P.304
			Sleep Mode Settings		P.304
			Power Save Key		P.304
			Enter Power Save Mode		P.305
		Output Settings	Print/Fax Output Settings	Print	P.305
				Fax	
			Output Tray Settings		P.305
			Shift Output Each Job		P.306
		Date/Time Settings			P.306
		Daylight Saving Time			P.306
		Weekly Timer Settings	Weekly Timer ON/OFF Settings		P.307
			Time Settings		P.307
			Date Settings		P.307
			Select Time for Power Save		P.307
			Password for Non-Business Hours		P.307

Utility Mode					Ref. page
Administrator Settings	System Settings	Restrict User Access	Copy Program Lock Settings		P.308
			Delete Saved Copy Program		P.308
			Restrict Access to Job Settings	Changing Job Priority	P.308
				Delete Other User Jobs	P.308
				Registering and Changing Addresses	P.308
				Changing Zoom Ratio	P.309
				Changing the “From” Address	P.309
				Change Registered Overlay	P.309
1				Biometric/IC Card Info. Registration	P.309
			Restrict Operation	Restrict Broadcasting	P.309
		Expert Adjustment	AE Level Adjustment		P.310
			Printer Adjustment	Leading Edge Adjustment	P.311
				Centering	P.312
				Leading Edge Adjustment (Duplex Side 2)	P.313
				Centering (Duplex 2nd Side)	P.314
				Erase Leading Edge ***	P.315
				Vertical Adjustment ***	P.316
				Media Adjustment	P.317
			Finisher Adjustment	Center Staple Position	P.318
				Half-Fold Position	P.319
				Tri-Fold Position Adjustment	P.320
				Punch Vertical Position Adjustment	P.321
				Punch Horizontal Position Adjustment	P.322
				Punch Regist Loop Size Adjustment	P.323
				Punch Edge Sensor Adjustment	P.323
1				Vertical Punch (Z-Fold) Position Adjustment	P.324
1				Horizontal Punch (Z-Fold) Position Adjustment	P.325
1				1st Z-Fold Position Adjustment	P.326
1				2nd Z-Fold Position Adjustment	
1				Punch Unit Size Detect Sensor	P.327
1				Post Inserter Tray Size Adjustment	P.327

Utility Mode					Ref. page
Administrator Settings	System Settings	Expert Adjustment	Density Adjustment	Thick 1/1+ -Yellow	P.328
				Thick 2/3/4-Yellow	
				Thick 1/1+ -Magenta	
				Thick 2/3/4-Magenta	
				Thick 1/1+ -Cyan	
				Thick 2/3/4-Cyan	
				Thick 1/1+ -Black	
				Thick 2/3/4-Black	
				Black Image Density	P.328
			Image Stabilization	Image Stabilization Only	P.329
				Image Stabilization Setting	
			Paper Separation Adjustment		P.330
			Color Registration Adjust	Color Registration Adjust (Yellow)	P.331
				Color Registration Adjust (Magenta)	
				Color Registration Adjust (Cyan)	
			Gradation Adjustment	Image Stabilization Only	P.333
				Print	
				Copy	
			Scanner Area ***	Scanner Adjustment: Leading Edge ***	P.335
				Scanner Adjustment: Centering ***	P.336
				Horizontal Adjustment ***	P.337
				Vertical Adjustment ***	P.338
			ADF Adjust-ment ***	Centering***	P.339
				Original Stop Position***	P.340
				Centering Auto Adjustment***	P.341
				Auto Adj. of Stop Position***	P.341
			Line Detection	Prior Detection Setting	P.342
				Feed Cleaning Settings	P.342
			Trail Edge Adjust		P.343
			User Paper Settings ***		P.344
			Erase Adjustment	Non-Image Area Erase Operation Settings	P.345
		List/Counter	Management List	Job Settings List	P.345
			Paper Size/Type Counter		P.345
			Meter Counter List		P.346
			Check Consumables List		P.346

Utility Mode						Ref. page
Administrator Settings	System Settings	Reset Settings	System Auto Reset			P.346
			Auto Reset			P.347
			Job Reset	When Account is changed		P.347
				When Original is set on ADF		P.347
				NEXT JOB	Staple Setting	P.347
					Original Set/ Bind Direction	P.347
					Reset Data After Job	P.348
		User Box Settings	Delete Unused User Box			P.348
			Delete Secure Print Documents			P.348
			Auto Delete Secure Documents			P.348
			Encrypted PDF Delete Time			P.348
			ID & Print Delete Time			P.349
			Document Hold Setting			P.349
			External Memory Function Settings			P.349
			Allow/Restrict User Box			P.349
			ID & Print Delete after Print Setting			P.350
			Document Delete Time Setting			P.350
		Standard Size Setting***	Original Glass Original Size Detect***			P.350
			Foolscap Size Setting***			P.350
		Stamp Settings	Header/Footer Settings			P.351
			Fax TX Settings			P.351
		Blank Page Print Settings				P.351
		Application Key Settings				P.351
		Skip Job Operation Settings	Fax			P.352
			Other than Fax			
		Default Bypass Paper Type Setting				P.352
		Page Number Print Position				P.352
		Advanced Preview Setting				P.352
	Administrator/Machine Settings	Administrator Registration				P.352
		Input Machine Address				P.353

Utility Mode					Ref. page
Administrator Settings	One-Touch/ User Box Registration	Create One-Touch Destination	Address Book	E-mail	P.353
				User Box	P.353
				Fax	P.353
				PC (SMB)	P.353
				FTP	P.354
				WebDAV	P.354
				IP Address Fax	P.354
				Internet Fax	P.354
			Group		P.354
			E-mail Settings	E-mail Subject	P.354
				E-mail Body	P.355
		Create User Box	Public/Personal User Box		P.355
			Bulletin Board User Box		P.355
			Relay User Box		P.355
			Annotation User Box		P.355
		One-Touch/ User Box Registration List	Address Book List		P.356
			Group List		P.356
			Program List		P.356
			E-mail Subject/Text List		P.356
		Maximum Number of User Boxes			P.357
	User Authentication/ Account Track	General Settings			P.357
		User Authentication Settings	Administrative Setting	User Name List	P.360
				Default Function Permission	P.360
				ID & Print Settings	P.361
				ID & Print Operation Settings	P.361
			User Registration		P.361
			User Counter		P.362
		Account Track Settings	Account Track Registration		P.362
			Account Track Counter		P.362
		Print without Authentication			P.362
		Print Counter List			P.363
		External Server Settings			P.363
		Limiting Access to Destinations	Create Group		P.363
			Apply Levels/Groups to Destinations		P.363
			Apply Levels/Groups to Users		P.364
		Authentication Device Settings	General Settings		P.364
			Logoff Settings		P.365

Utility Mode					Ref. page
Administrator Settings	User Authentication/ Account Track	Auth/Acct Track Common Setting	Logout Confirmation Screen Display Setting		P.365
			Single Color > 2 Color Output Management		P.365
		Scan to Home Settings			P.365
		Scan to Authorized Folder Settings			P.366
	Network Settings	TCP/IP Settings	IPv4 Settings		P.366
			IPv6 Settings		P.367
			DNS Host		P.367
			DNS Domain		P.368
			DNS Server Settings(IPv4)		P.368
			DNS Server Settings(IPv6)		P.368
			IPsec Settings		P.369
			IP Filtering (Permit Access)		P.371
			IP Filtering (Deny Access)		P.371
			RAW Port Number		P.372
			LLMNR Setting		P.372
		NetWare Settings	IPX Settings		P.372
			NetWare Print Settings		P.373
			User Authentication Settings(NDS)		P.374
		HTTP Server Settings			P.375
		FTP Settings	FTP TX Settings		P.377
			FTP Server Settings		P.378
		SMB Settings	Client Settings		P.378
			Print Settings		P.379
			WINS Settings		P.379
			Direct Hosting Settings		P.380
		LDAP Settings	Enabling LDAP		P.380
			Setting Up LDAP		P.381
			Default LDAP Server Setting		P.385
		E-mail Settings	E-mail TX (SMTP)		P.385
			E-mail RX (POP)		P.388
			S/MIME Communication Settings		P.391
		SNMP Settings			P.392
		AppleTalk Settings			P.396
		Bonjour Setting			P.396
		TCP Socket Settings	TCP Socket		P.397
			TCP Socket (ASCII Mode)		P.397
		Network Fax Settings	Network Fax Function Settings	IP Address Fax Function	P.398
				Internet Fax Function	P.398
			SMTP TX Settings		P.398
			SMTP RX Settings		P.399

Utility Mode					Ref. page
Administrator Settings	Network Settings	WebDAV Settings	WebDAV Client Settings		P.399
			WebDAV Server Settings		P.401
		Web Service Settings	Web Service Common Settings		P.401
			Printer Settings		P.402
			Scanner Settings		P.403
		SSDP Settings			P.404
		Detail Settings	Device Setting		P.404
			Time Adjustment Setting		P.405
			Status Notification Setting	Register Notification Address	P.406
			Total Counter Notification Settings		P.407
			PING Confirmation		P.408
			SLP Setting		P.408
			LPD Setting		P.408
			Prefix/Suffix Setting	ON/OFF Setting	P.408
				Prefix/Suffix Setting	P.408
			Error Code Display Setting		P.409
		IEEE802.1X Authentication Settings			P.409
		Web Browser Setting			P.409
		Bluetooth Setting			P.410
	Copier Settings	Auto Zoom (Platen)			P.410
		Auto Zoom (ADF)			P.410
		Specify Default Tray when APS OFF			P.410
		Select Tray for Insert Sheet			P.410
		Print Jobs During Copy Operation			P.411
		Tri-Fold Print Side			P.411
		Automatic Image Rotation			P.411
		Card Shot Settings	Layout		P.412
			Zoom		P.412
			Store Original Size		P.412
	Printer Settings	USB Timeout			P.412
		Network Timeout			P.412
		Print XPS Errors			P.413
		PSWC Direct Print			P.413

Utility Mode					Ref. page
Administrator Settings	Fax Settings	Header Information			P.413
		Header/ Footer Position	Header Position		P.413
			Print Receiver's Name		P.414
			Footer Position		P.414
		Line Parameter Setting	Dialing Method		P.414
			Receive Mode		P.414
			Number of RX Call Rings		P.415
			Number of Redials		P.415
			Redial interval		P.415
			Line Monitor Sound		P.415
			Line Monitor Sound Vol.		P.415
		TX/RX Settings	Duplex Print (RX)		P.416
			Letter/Ledger over A4/A3		P.416
			Print Paper Selection		P.416
			Print Paper Size		P.416
			Incorrect User Box No. Entry		P.417
			Tray Selection for RX Print		P.417
			Min. Reduction for RX Print		P.417
			Print Separate Fax Pages		P.417
			File After Polling TX		P.417
			No. of Sets (RX)		P.417
		Function Settings	Function ON/ OFF Setting	F Code TX	P.418
				Relay RX	P.418
				Relay Printing	P.418
				Destination Check Display Function	P.419
				Confirm Address (TX)	P.419
				Confirm Address (Register)	P.419
			Memory RX Setting		P.419
			Closed Network RX		P.420
			Forward TX Setting		P.420
			Incomplete TX Hold		P.420
			PC-Fax RX Setting		P.421
			TSI User Box Setting		P.421
		PBX Connection Setting			P.421

Utility Mode					Ref. page
Administrator Settings	Fax Settings	Report Settings	Activity Report		P.422
			TX Result Report		P.422
			Sequential TX Report		P.422
			Timer Reservation TX Report		P.422
			Confidential RX Report		P.422
			Bulletin TX Report		P.423
			Relay TX Result Report		P.423
			Relay Request Report		P.423
			PC-FAX TX Error Report		P.423
			Broadcast Result Report		P.424
			TX Result Report Check		P.424
			Network Fax RX Error Report		P.424
			MDN Message		P.424
			DSN Message		P.425
			Print E-mail Message Body		P.425
		Job Settings List			P.425
		Multi Line Settings	Line Parameter Setting	Dialing Method	P.426
				Number of RX Call Rings	P.426
				Line Monitor Sound	P.426
			Function Settings	PC-FAX TX Setting	P.426
			Multi Lines Settings		P.427
			Sender Fax No.		P.427
		Network Fax Settings	Black Compression Level		P.427
			Color/Grayscale Multi-Value Compression Method		P.428
			Internet Fax Self Rx Ability		P.428
			Internet Fax Advanced Settings		P.429
1			IP Address Fax Operation Settings		P.430
	System Connection	OpenAPI Settings	Access Setting		P.430
			SSL/Port Number		P.431
			Authentication		P.431
		Call Remote Center			P.432
1		Automatic Prefix/Suffix Setting			P.432
1		Printer Information			P.432
1		Cellular Phone/PDA Setting			P.432

Utility Mode				Ref. page
Administrator Settings	Security Settings	Administrator Password		P.433
		User Box Administrator Setting		P.433
		Administrator Security Levels		P.434
		Security Details	Password Rules	P.434
			Prohibited Functions When Authentication Error	P.435
			Confidential Document Access Method	P.436
			Manual Destination Input	P.436
			Print Data Capture	P.437
			Job Log Settings	P.437
			Restrict Fax TX	P.437
			Hide Personal Information	P.438
			Display Activity Log	P.438
			Initialize	P.438
			Job History Thumbnail Display	P.438
			Secure Print Only	P.439
			Copy Guard	P.439
			Password Copy	P.439
			Web browser contents access	P.440
		Enhanced Security Mode		P.440
		HDD Settings	Check HDD Capacity	P.441
			Overwrite HDD Data	P.442
			Overwrite All Data	P.443
			HDD Lock Password	P.443
			Format HDD	P.444
			HDD Encryption Setting	P.444
		Function Management Settings	Usage Settings for Each Function	P.445
			Maximum Job Allowance	P.445
			Network Function Usage Settings	P.445
			Authentication Time Setting	P.446
	Security Settings	Stamp Settings	Apply Stamps	P.446
			Delete Registered Stamp	P.446
		Image Log Transfer Settings		P.447
		Driver Password Encryption Setting		P.447
	License Settings	Get Request Code		P.448
		Install License		P.448
		List of Enabled Functions		P.448
	OpenAPI Authentication Management Settings			P.449
Check Consumable Life		Print List		—
Banner Printing				P.449

Utility Mode			Ref. page
My Panel Settings	Language Setting		P.450
	Measurement Unit Setting		
	Copier Settings		
	Scan/Fax Settings		
	Color Selection Setting		
	Main Menu Settings		
	Initial Screen Setting		
⚠1 Device Information			P.450
Meter Count	Check Details	Print List	—
		Coverage Rate	—
		Copy	—
		Print	—
		Scan/Fax	—
		Other	—
Remaining Copy Count *1			—

*1: Displayed after a user or account authentication if maximum limit is set for the number of copies the user or account can make.

10.2 Starting/Exiting

10.2.1 Starting procedure

1. Press the Utility/Counter key.
2. The Utility Mode screen will appear.

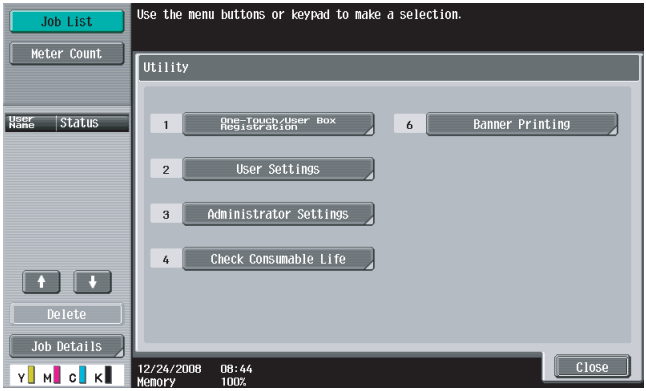

A0P0F3E543DA

10.2.2 Exiting procedure

- Touch the [Close] key.

10.3 Touch Panel Adjustment

A. Use

- To adjust the position of the touch panel display
- Make this adjustment if the touch panel is slow to respond to a pressing action.
- Use during the setup procedure.

B. Procedure

1. Press the Accessibility key.
2. Touch [Touch Panel Adj.].
3. Using the tip of a pen or similar object, touch the four keys (+) on the screen in sequence.

- These crosses may be touched in any order; but be sure to touch the center of each cross.
- Use care not to damage the screen surface with the tip of the pen.

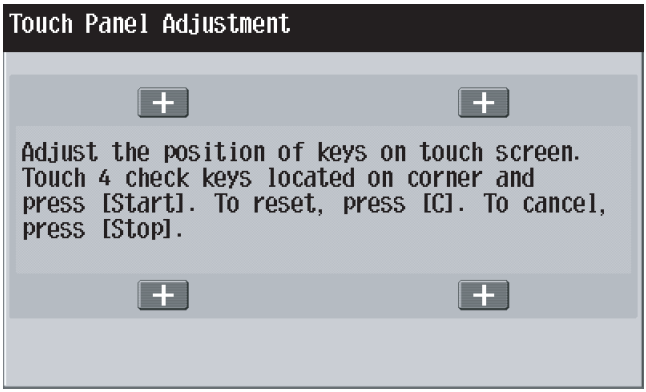

A0P0F3E544DA

4. Touching all four crosses will turn the Start key ON in blue.
5. Press the Start key.

10.4 One-Touch User Box Registration

- In a copier where the user authentication function that uses an external server or MFP is set to ON, when you operate the copier without performing user authentication, this menu is not displayed.
- It will not be displayed when the authentication device is set to “Set” by the following setting.
  [Service Mode] → [Billing Setting] → [Management Function Choice]

10.4.1 Create One-Touch destination-Address Book (Public)/(Personal)

A. E-mail

(1) Use

- To register/change e-mail address to send scanned data.

(2) Procedure

- A new address can be registered by touching [New].
- Select any displayed address to check, edit or delete the setting.

B. User Box

- It will not be displayed when the following setting shows that authentication device or the vendor is mounted.
  [Service Mode] → [Billing Setting] → [Management Function Choice]
  (It will be displayed when the key counter is mounted.)

(1) Use

- To register/change the Box address when storing the scanned data in the box in the hard disk in the main body.

(2) Procedure

- A new address can be registered by touching [New].
- Select any displayed address to check, edit or delete the setting.
- At least one User Box must be registered for registering a Box address.

C. Fax

(1) Use

- To register/change the fax destinations.

(2) Procedure

- A new address can be registered by touching [New].
- Select any displayed address to check, edit or delete the setting.

D. PC(SMB)

(1) Use

- To register/change SMB address to send scanned data.

(2) Procedure

- A new address can be registered by touching [New].
- Select any displayed address to check, edit or delete the setting.

E. FTP

(1) Use

- To register/change FTP address to send scanned data.

(2) Procedure

- A new address can be registered by touching [New].
- Select any displayed address to check, edit or delete the setting.

F. WebDAV

(1) Use

- To register/change WebDAV address to send scanned data.

(2) Procedure

- A new address can be registered by touching [New].
- Select any displayed address to check, edit or delete the setting.

G. IP Address Fax

- Setting will be available only when [IP Address FAX] is set to “ON” in the following settings.
  [Administrator Settings] → [Network Settings] → [Network Fax Settings] → [Network Fax Function Settings]

(1) Use

- To register/change the IP address fax destination when transmitting the IP address fax data.

(2) Procedure

- A new address can be registered by touching [New].
- Select any displayed address to check, change or delete the setting.

H. Internet Fax

- Setting will be available only when [Internet FAX] is set to “ON” in the following settings.
  [Administrator Settings] → [Network Settings] → [Network Fax Settings] → [Network Fax Function Settings]

(1) Use

- To register/change the Internet fax address when transmitting the internet fax data.

(2) Procedure

- A new address can be registered by touching [New].
- Select any displayed address to check, change or delete the setting.

10.4.2 Create One-Touch destination-Group

A. Use

- To register/change a group to send scanned data/fax data simultaneously.

B. Procedure

- A new address can be registered by touching [New].
- Select any displayed group to check, edit or delete them.
- At least one address must be registered for registering a new group.

10.4.3 Create One-Touch destination-E-mail Settings

- It will not be displayed when the following setting shows that the management device 2 is mounted.
  [Service Mode] → [Billing Setting] → [Management Function Choice]

A. E-mail Subject

(1) Use

- To register the e-mail subject when transmitting the scanned data.

(2) Procedure

- A new address can be registered by touching [New].
- Select any displayed address to detail check, edit or delete the setting.
- The subject can be set as default by selecting the subject displayed on the screen and pressing [Set as Default].

B. E-mail Body

(1) Use

- To register the e-mail message when transmitting the scanned data.

(2) Procedure

- A new address can be registered by touching [New].
- Select any displayed address to detail check or delete the setting.
- The text can be set as default by selecting the text displayed on the screen and pressing [Set as Default].

10.4.4 Create User Box

- It will not be displayed when the authentication device is set to “Set” by the following setting.
  [Service Mode] → [Billing Setting] → [Management Function Choice]
- It will not be displayed when the following setting shows that the vendor is mounted.
  [Service Mode] → [Billing Setting] → [Management Function Choice]
  (It will be displayed when the key counter is mounted.)
- This menu is not available due to functional restriction during user authentication when [User Box] is set to Restrict.
- It will not be displayed when [Allow/Restrict User Box] is set to “Restrict” in the following settings.
  [Administrator Settings] → [System Settings] → [User Box Settings]

10.4.5 Create User Box-Public/Personal User Box

A. Use

- To register/change the box for storing text data in the hard disk of the machine.
- Shared or personal box can be registered according to its intended use.

B. Procedure

- A new box can be registered by touching [New].
- Select any displayed box to change or delete it.

10.4.6 Create User Box-Bulletin Board User Box

- It will not be displayed when the authentication device 1 is set to “Set” by the following setting.
  [Service Mode] → [Billing Setting] → [Management Function Choice]
- It will not be displayed when the following setting shows that the vendor is mounted.
  [Service Mode] → [Billing Setting] → [Management Function Choice]
  (It will be displayed when the key counter is mounted.)
- It will not be displayed due to functional restriction upon user authentication when [User Box] is set to “OFF.”
- It will be displayed only when the optional fax kit (FK-502) is mounted.
- It will not be displayed during user authentication if the fax operation is set to “Restrict” by the function restriction.

A. Use

- To register/change the bulletin board user box.

B. Procedure

- A new box can be registered by touching [New].
- Select any displayed box to change or delete it.

10.4.7 Create User Box-Relay User Box

- It will not be displayed when the authentication device 1 is set to “Set” by the following setting.
  [Service Mode] → [Billing Setting] → [Management Function Choice]
- It will not be displayed when the following setting shows that the vendor is mounted.
  [Service Mode] → [Billing Setting] → [Management Function Choice]
  (It will be displayed when the key counter is mounted.)
- It will not be displayed due to functional restriction upon user authentication when [User Box] is set to “OFF.”
- It will be displayed only when the optional FAX kit (FK-502) is mounted.
- It will be displayed when the following setting is set to “ON.”
  [Service Mode] → [FAX] → [System] → [Display Setting] → [Relay]

A. Use

- To register/change the Relay User Box.

B. Procedure

- A new box can be registered by touching [New].
- Select any displayed box to change or delete it.

10.4.8 Limiting Access to Destinations

- It will not be displayed when the following setting is set to “ON.”
  [Administrator Settings] → [Security Settings] → [Enhanced Security Mode]

A. Outline

- The Limiting Access to Destinations setting allows or restricts individual user's access to each destination. This enables security control by restricting information that can be accessed.

(1) Apply Levels

- One of the six levels from 0 to 5 can be assigned to all destinations. Similarly, one of the levels from 0 to 5 can be assigned to all users. Depending on the combination of the destination and user levels, destinations that a user can access can be limited.
  For example, users of level 2 can access the destinations that belong to the levels 0 to 2, but cannot access to the destinations that belong to the levels 3 to 5. Level 5 users can access all destinations of the levels 0 to 5.

(2) Groups

- A group can be made with a certain name to allow its members to access its destinations. Users and destinations can be registered for the group so that the registered destinations can be accessed by the registered users.
  Access restriction depending on an individual level is also applied to the group with access to the destinations determined by the combination of the user and destination levels within a group.
- A destination can be included in only one group.
- A user can be included in multiple different groups.

10.4.9 Limiting Access to Destinations-Apply Levels/Groups to Destinations

A. Address Book

(1) Use

- Sets a level and a group for destinations registered in the address book.

(2) Procedure

- Select a destination, press [Apply Level] or [Apply Group] and make a setting.

B. Group

(1) Use

- Sets a level and a group for destinations registered in the group.

(2) Procedure

- Select a destination, press [Apply Level] or [Apply Group] and make a setting.

C. Program

(1) Use

- Sets a level and a group for destinations registered in the program.

(2) Procedure

- Select a destination, press [Apply Level] or [Apply Group] and make a setting.

10.5 User Settings

10.5.1 System Settings-Language Selection

A. Use

- To select the language on the LCD display.
- To change the language used on the control panel.

B. Procedure

- The language options depend on the marketing area selected in [Marketing Area] available from [System 1] under Service Mode.
See P.523

10.5.2 System Settings-Measurement Unit Settings

A. Use

- To select the unit displayed on the LCD display.

B. Procedure

- The default setting varies depending on the marketing area.

mm (Numerical Value) inch (Numerical Value) inch (Fraction)

10.5.3 System Settings-Paper Tray Settings

A. Auto Tray Selection Settings

(1) Use

- To set the tray for automatic selection when APS is being set.
- To establish the priority for switching the Tray when ATS is being set.

(2) Procedure

- Select the tray on the [Auto Tray Select] screen.
- Set the priority on the [Tray Priority] screen.

B. Auto Tray Switch ON/OFF

(1) Use

- To set whether to automatically switch to another tray with same size paper when the paper feed tray runs out of paper during printing.

(2) Procedure

- The default setting is Restrict.

Allow “Restrict”

C. No Matching Paper in Tray Setting

(1) Use

- To set whether to switch to another tray automatically when the specified tray runs out of paper during printing.
  Stop Printing (Tray Fixed) : It stops printing when the specified tray runs out of paper.
  Switch Trays (Tray Priority): To switch to another tray with the specified paper and print when the tray is out of paper

(2) Procedure

- The default setting is Stop Printing (Tray Fixed).

“Stop Printing (Tray Fixed)” Switch Trays (Tray Priority)

D. Print Lists

- It will not be displayed when the following setting shows that authentication device or the vendor is mounted.
  [Service Mode] → [Billing Setting] → [Management Function Choice]
  (It will be displayed when the key counter is mounted.)
- It will not be displayed when the authentication device 1 is set to "Set" by the following setting.
  [Service Mode] → [Billing Setting] → [Management Function Choice]

(1) Use

- To set the paper feed tray for output the list for the meter count or the unit check.
- It sets the simplex/duplex printing of the output for the sales counter or the unit check list.

(2) Procedure

<Paper tray>

- The default setting is Tray 1.

<Simplex/Duplex>

- The default setting is 1-Sided.

E. Post Inserter Settings

- It will be displayed only when the optional post inserter PI-505 is mounted.

(1) Use

- To set the paper tray, paper type and paper size for the post inserter.

(2) Procedure

<Paper Tray>

- The default setting is F1.
  "F1" F2

<Paper Type>

- The default setting is Plain Paper.
  "Plain Paper" Thick 1 Thick 1+ Thick 2

<Paper Size>

- The default setting is Auto Detect.
  "Auto Detect" Standard Size Custom Size

10.5.4 System Settings-Auto Color Level Adjust.

A. Use

- To set the criterion level to discriminate between a colored original and a black-and-white original in the auto color mode.

B. Procedure

- Five levels are available to choose from and the default setting is 3.

Black Standard Full Color
1 2 "3" 4 5

10.5.5 System Settings-Power Save Settings

- It will be displayed only when the following setting is set to “Level 1” or “Level 2.”
  [Administrator Settings] → [Security Setting] → [Administrator Security Level]
- t will not be displayed when the following setting shows that authentication device 1 or the vendor is mounted.
  [Service Mode] → [Billing Setting] → [Management Function Choice]

A. Low Power Mode Settings

(1) Use

- To set the time until low power starts operating after the last key operation has been completed.
- Low power: To turn LED and LCD OFF, and lower the power consumption.

(2) Procedure

- Use the 10-key pad for setting.
- The default setting is 15 min.

“15 min.” (10 to 240)

B. Sleep Mode Settings

(1) Use

- To set the time until sleep mode starts operating after the last key operation has been completed.
- Turn all lines OFF except 5 V line for control.
- “OFF” will only be displayed when [No Sleep] in Service Mode is set.

(2) Procedure

- Use the 10-key pad for setting.
- The default setting is 30 min.

“30 min.” (15 to 240) / OFF

10.5.6 System Settings-Output Settings

- It will be displayed only when the following setting is set to “Level 2.”
  [Administrator Settings] → [Security Settings] → [Administrator Security Levels]
- It will not be displayed when the following setting shows that authentication device or the vendor is mounted.
  [Service Mode] → [Billing Setting] → [Management Function Choice]
  (It will be displayed when the key counter is mounted.)

A. Print/Fax Output Settings

(1) Use

- To set the timing for printing for the PC print job or fax received.
  Batch Print : Starts printing when all data are received
  Page Print : Starts printing every time data for each page are received

(2) Procedure

<Printer>

- The default setting is Page Print.

<Fax>

- The default setting is Batch Print.

NOTE

- **[FAX] will be displayed only when the optional fax kit (FK-502) is mounted.**

B. Output Tray Setting

1 • It will be displayed when the optional finisher FS-526/527 or the job separator JS-504 is mounted.

(1) Use

• To set the priority output tray for each application (Copy print, Printer, Fax and Print Reports).

(2) Procedure

• The default settings are as follows.

Copy	: Tray 1
Print	: Tray 1
Report Output	: Tray 2
Fax	: Tray 2

1 • [Tray 3] will be displayed only when the job separator JS-603 is mounted to the finisher FS-527.

10.5.7 System Settings-AE Level Adjustment

• It will be displayed only when the following setting is set to "Level 2."
[Administrator Settings] → [Security Settings] → [Administrator Security Levels]
• It will not be displayed when the following setting shows that authentication device or the vendor is mounted.
[Service Mode] → [Billing Setting] → [Management Function Choice]
(It will be displayed when the key counter is mounted.)

A. Use

• To set the default setting for AE (Auto Exposure) The larger the value becomes the more emphasized the background will be.
To make the background level foggier : Increase the setting value
To make the background level less foggy : Decrease the setting value

B. Procedure

• The default setting is 2.

"2" (0 to 4)

10.5.8 System Settings-Auto Paper Select for Small Original

A. Use

• To make the copy setting when the paper is undetectably small, or no original is being set.
• To copy the original such as business cards with which the original detection is not effective.
Copy on Small Size : Copies on A5 paper.
Copy on A4/Letter : Copies on A4 or Letter (8 1/2 x 11) size paper.
Prohibit Copy : Does not copy since the original size cannot be detected. paper feed tray needs to be selected prior to pressing the Start key.

B. Procedure

• The default setting is Prohibit Copy.

Copy on Small Size Copy on A4/Letter "Prohibit Copy"

10.5.9 System Settings-Blank Page Print Settings

- It will be displayed only when the following setting is set to “Level 2.”
  [Administrator Settings] → [Security Settings] → [Administrator Security Levels]
- It will not be displayed when the following setting shows that vendor is mounted.
  [Service Mode] → [Billing Setting] → [Management Function Choice]

A. Use

- Select wether or not to print the stamp/composition on blank pages.

B. Procedure

- The default setting is Do Not Print.

Print “Do Not Print”

10.5.10 System Settings-Page Number Print Position

- It will be displayed only when the following setting is set to “Level 2.”
  [Administrator Settings] → [Security Settings] → [Administrator Security Levels]

A. Use

- Specify a page number print position when printing page numbers after configuring 2-sided print or booklet settings. Select whether to print the page numbers on a same position on all pages or on positions symmetric with respect to the stapling position.

B. Procedure

- The default setting is Left & Right Bind: All the Same/Top & Bottom Bind: All the Same.
  “Left & Right Bind: All the Same/Top & Bottom Bind: All the Same”
  Left & Right Bind: Symmetrical/Top & Bottom Bind: All the Same
  Left & Right Bind: Symmetrical/Top & Bottom Bind: Symmetrical

10.5.11 System Settings-Select Keyboard

A. Use

- Select the keyboard type displayed by default in the touch panel.
- The type of keyboard to be displayed when [Local Keyboard] is selected depends on the language selected in [User Settings] → [System Settings] → [Language Selection].
- The type of keyboard corresponding to each language is shown below.

Language	Keyboard
Japanese	Standard keyboard (JIS) + Local keyboard (Japanese)
English (US) *1	Standard keyboard (US ASCII) only
English (UK) *1	Standard keyboard (US ASCII) + Local keyboard (UK)
French	Standard keyboard (US ASCII) + Local keyboard (French)
Italian	Standard keyboard (US ASCII) + Local keyboard (Italian)
German	Standard keyboard (US ASCII) + Local keyboard (German)
Spanish	Standard keyboard (US ASCII) + Local keyboard Spanish)
Simplified Chinese	Standard keyboard (JIS) + Local keyboard (Simplified Chinese)
Traditional Chinese	Standard keyboard (JIS) + Local keyboard (Traditional Chinese)
Korean	Standard keyboard (JIS) + Local keyboard (Korean)

*1 : If [Marketing Area] is set to Europe and [Language Selection] is set to English, English (UK) takes effect. If another marketing area and English are selected, English (US) takes effect.

B. Procedure

- The language options depend on the marketing area selected in [Marketing Area] available from [System 1] under Service Mode.
See P.523

Standard Keyboard	Local keyboard

10.5.12 Custom Display Settings-Copier Settings

A. Default Tab

(1) Use

- Selects a default tab display in the copy mode.
  Basic : Normal basic screen
  Quick Copy : This screen displays all options that can be selected for Paper, Zoom, and Duplex/Combine functions.
  For color functions, all selectable options can be displayed on the screen.
  The normal [Basic] screen is also displayed as another tab on the screen.

(2) Procedure

- The default setting is Basic.

“Basic”	Quick Copy

B. Shortcut Key 1/2

(1) Use

- Selects whether to use the shortcut key.
- Adds frequently used shortcut keys of auxiliary functions to the basic screen.

(2) Procedure

- The default setting is OFF.

ON	“OFF”

- When this setting is set to ON, select auxiliary functions to get their shortcut keys displayed on the screen.

C. Quick Settings 1, 2, 3, 4

- It will be displayed in bizhub C652/C552 machines where the function version is version 2 or later and in all bizhub C452 machines.

(1) Use

- Allows you to register setting conditions for frequently used copy functions and place them on the basic settings screen.
- The registered setting condition can be invoked by only pressing the corresponding easy setting key.

(2) Procedure

- The default setting is OFF.

ON	“OFF”

- When this setting is set to ON, select the copy functions you wish to register.

10.5.13 Custom Display Settings-Scan/Fax Settings

- It will not be displayed when the following setting shows that authentication device is mounted.
  [Service Mode] → [Billing Setting] → [Management Function Choice]

A. Default Tab

(1) Use

- To set the basic screen display in scan/fax mode.

(2) Procedure

- The default setting is Address Book.

Address Search (LDAP) Job History "Address Book" Direct Input

B. Program Default

(1) Use

- To set the default display for the program screen during scan/fax mode.
- To keep the default display on the program screen which frequently changes during scan/fax mode

(2) Procedure

- The default setting is PAGE 1.

Temporary One-Touch/ "PAGE1" to PAGE27

C. Address Book Index Default

(1) Use

- To set the default display for the address book screen during scan/fax mode.
- To keep the default display instead of search string on the address book which frequently changes during scan/fax mode.

(2) Procedure

- The default setting is Main.

"Favorite" /ABC to WXYZ / etc

D. Shortcut Key 1/2

- [Shortcut Key 2] is not displayed when the optional image controller (IC-412) is installed.

(1) Use

- Selects whether to use the shortcut key.
- Adds frequently used shortcut keys of auxiliary functions to the basic screen.

(2) Procedure

- The default setting is OFF.

ON "OFF"

- When this setting is set to ON, select auxiliary functions to get their shortcut keys displayed on the screen.

E. Default Address Book

(1) Use

- Sets a default screen display for the scan/fax mode where the address book is set to be displayed.

(2) Procedure

- The default setting is Index.

"Index" Address Type

F. Default Address Type

(1) Use

- When the Default Address Book setting is set to "Address Type", select an address type that is displayed as the default in the "Address Book" tab

(2) Procedure

- The default setting is Group.

Fax / E-Mail / Box / I-Fax / IP Ad. Fax / PC(SMB) / FTP / WebDAV / "Group"

10.5.14 Custom Display Settings-User Box Settings

A. Default Tab

(1) Use

- Selects a default tab display in the user box mode.

(2) Procedure

- The default setting is Public.

"Public" Personal System Group

B. Shortcut Key 1/2

- [Shortcut Key 2] is not displayed when the optional image controller (IC-412) is installed.

(1) Use

- Selects whether to use the shortcut key.
- Adds the shortcut keys of frequently used user box functions to the basic screen.

(2) Procedure

- The default setting is OFF.

ON "OFF"

- When this setting is set to ON, select auxiliary functions to get their shortcut keys displayed on the screen.

10.5.15 Custom Display Settings-Copy Screen

- It will not be displayed when the following setting shows that key counter, vendor, or authentication device 1 is mounted.
  [Service Mode] → [Billing Setting] → [Management Function Choice]
  However, this menu is available when the key counter is installed and [The next job reservation] is set to License.
  [Service Mode] → [Billing Setting] → [Management Function Choice]

A. Copy Operating Screen

(1) Use

- To set the display on the control panel screen during printing.
  Yes : The screen shows that the printing is being carried out. The job can be reserved with [Program Next Job].
  No : The screen does not indicate the printing being carried out. The normal copy setting screen will be displayed. The copy reservation is available.

(2)

- The default setting is No.

Yes "No"

10.5.16 Custom Display Settings-Fax Active Screen

- It will be displayed only when the optional fax kit (FK-502) is mounted.
- It will not be displayed when the following setting shows that key counter, vendor, or authentication device 1 is mounted.
  [Service Mode] → [Billing Setting] → [Management Function Choice]

A. TX Display

(1) Use

- To set the screen display for the control panel when transmitting fax.

(2) Procedure

- The default setting is No.

Yes "No"

B. RX Display

(1) Use

- To set the screen display on the control panel when receiving fax.

(2) Procedure

- The default setting is No.

Yes "No"

10.5.17 Custom Display Settings-Color Selection Settings

A. Use

- Specifies a color that highlights a selection on the control panel.

B. Procedure

- The default setting is Green.

"Green" Blue Yellow Pumpkin

10.5.18 Custom Display Settings-Left Panel Display Default

A. Use

- Specifies an item that is shown as a default on the left panel display.
  - Job List (List Display) : Displays a list of jobs that are both being printed and waiting to be printed.
  - Job List (Status Display) : Displays the status of jobs that are being processed.
  - Check Job Settings : Displays the setting of the copy job that is being printed.

B. Procedure

- The default setting is Job List.

"Job List." Check Job Settings

10.5.19 Custom Display Settings-Search Option Settings

A. Uppercase and Lowercase Letters

(1) Use

- Select whether or not to differentiate between upper case and lowercase letters.

(2) Procedure

- The default setting is Differentiate.

"Differentiate" Do Not Differentiate

B. Search Option Screen

(1) Use

- Select whether or not to display [Uppercase and Lowercase Letters] setting in the advanced search.
- Displaying the search option screen allows changing the search criteria for an individual search.

(2) Procedure

- The default setting is Off.

On "Off"

10.5.20 Copier Settings-Auto Booklet ON when Fold & Staple

- It will be displayed only when the optional finisher is mounted.

A. Use

- To set whether to set the auto booklet when fold & staple is selected.

B. Procedure

- The default setting is Auto Select Booklet.

"Auto Select Booklet" OFF

10.5.21 Copier Settings-Auto Zoom for Combine/Booklet

A. Use

- To set whether to select the appropriate magnification when combine or booklet is selected during auto paper select.

B. Procedure

- The default setting is Auto Display Zoom Ratio.

"Auto Display Zoom Ratio" OFF

10.5.22 Copier Settings-Auto Sort/Group Selection

A. Use

- Selects whether to use the auto sort/group selection function when a job has output of two or more sheets.
  - Yes : Automatically disables the Auto sort/group selection when a sheet of original is placed on the ADF and the start key is pressed. Automatically enables the Auto sort/group selection when two or more sheets of originals are placed on the ADF and the start key is pressed.
  - No : Disable the Auto sort/group selection.

B. Procedure

- The default setting is Yes.

"Yes" No

10.5.23 Copier Settings-Default Copy Settings

- This menu is unavailable if user authentication is not made while either of authentication devices is set to Set in the [Service Mode] → [Billing Setting] → [Management Function Choice].
- This menu is not available when the key counter is set or when a warning appears to inform that the vendor's main power switch needs to be checked or coins (a card) are not inserted under the condition where the vendor is set to Set in the [Service Mode] → [Billing Setting] → [Management Function Choice].

A. Use

- To make default settings for the copy mode.

* The machine is initialized at the following timings:
- The main power switch is turned ON.
- Panel is reset.
- In an Interrupt mode.
- Auto Reset
- The password entry screen for account track is changed.

B. Procedure

<Current Setting>
- The settings made on the control panel before entering the setting menu screens are registered as the default settings of copy functions.

<Factory Default>
- The settings made at the time of shipment from the factory are registered as the default settings of copy functions.

10.5.24 Copier Settings-Default Enlarge Display Settings

- Displayed only when you select [Utility/Counter] → [User Settings] → [Copier Settings] in the enlarge display mode.

A. Use

- To make default settings for the enlarge display mode.

* The machine is initialized at the following timings:
- The main power switch is turned ON.
- Panel is reset.
- In an Interrupt mode.
- Auto Reset
- The password entry screen for account track is changed.

B. Procedure

<Current Setting>
- The settings made on the control panel before entering the setting menu screens are registered as the default settings of copy functions.

<Factory Default>
- The settings made at the time of shipment from the factory are registered as the default settings of copy functions.

10.5.25 Copier Settings-When AMS Direction is Incorrect

A. Use

- To set whether to print when the original is set in different direction from the set paper during auto zoom select.
  Print : To print according to the selected direction and size of paper
  Delete Job : To display alarm and cancel the job

B. Procedure

- The default setting is Print.

"Print" Delete Job

10.5.26 Copier Settings-Separate Scan Output Method

A. Use

- To set the output mode at Separate Scan setting.
  Page Print : Print consecutively during the read operation.
  Batch print : Print all at once after reading all data.
  Copy setting can be changed after the read operation.

B. Procedure

- The default setting is Page Print.

"Page Print" Batch Print

10.5.27 Copier Settings-Enlargement Rotation

A. Use

- Sets whether to rotate images of which length is more than 297 mm in the main scan direction (in the horizontal direction on the ADF or the Original glass) in the copying process.
  - Allow : Makes an enlargement rotation only when black is selected for the color setting.
  - Restrict : Disables an enlargement rotation regardless of the color setting.

B. Procedure

- The default setting is Restrict.

Allow “Restrict”

10.5.28 Copier Settings-Auto Zoom (Platen)

- It will be displayed only when the following setting is set to “Level 1” or “Level 2.” [Administrator Settings] → [Security Settings] → [Administrator Security Levels]

A. Use

- To set whether to function the auto magnification when the feed tray is selected with document set on the original glass (excepting at automatic paper selection mode.)

B. Procedure

- The default setting is OFF.

ON “OFF”

10.5.29 Copier Settings-Auto Zoom (ADF)

- It will be displayed only when the following setting is set to “Level 1” or “Level 2”. [Administrator Settings] → [Security Settings] → [Administrator Security Levels]

A. Use

- To set whether to function the auto magnification when the feed tray is selected with document set on the ADF (excepting at automatic paper selection mode.)

B. Procedure

- The default setting is ON.

“ON” OFF

10.5.30 Copier Settings-Specify Default Tray when APS Off

- It will be displayed only when the following setting is set to “Level 1” or “Level 2.” [Administrator Settings] → [Security Settings] → [Administrator Security Levels]

A. Use

- To set the tray to be used when APS is cancelled.

B. Procedure

- The default setting is Tray (Tray 1) Before APS OFF.

“Tray Before APS OFF” Default Tray

10.5.31 Copier Settings-Select Tray for Insert Sheet

- It will be displayed only when the following setting is set to “Level 1” or “Level 2.”
  [Administrator Settings] → [Security Settings] → [Administrator Security Levels]

A. Use

- To select the default setting of the tray for cover sheet paper.

B. Procedure

- The default setting is Tray 2.

10.5.32 Copier Settings-Tri-Fold Print Side

- It will be displayed only when the following setting is set to “Level 1” or “Level 2.”
  [Administrator Settings] → [Security Settings] → [Administrator Security Levels]
- It will be displayed only when the optional finisher FS-526 is mounted.

A. Use

- Specifies the side of copies to be folded.
  Inside : Folds paper in three with the printed side in.
  Outside: Folds paper in three with the printed side out.

B. Procedure

- The default setting is Inside.

Outside “Inside”

10.5.33 Copier Settings-Print Jobs During Copy Operation

- It will be displayed only when the following setting is set to “Level 2.”
  [Administrator Settings] → [Security Settings] → [Administrator Security Levels]

A. Use

- To set whether to accept the printing job for print data or fax data during copy operation.
  Accept : Receives the print data or fax data to print.
  Receive Only : Print data or fax data will be printed when the copy operation is finished.

B. Procedure

- The default setting is Accept.

“Accept” Receive Only

10.5.34 Copier Settings-Automatic Image Rotation

- [It will be displayed only when the following setting is set to “Level 1” or “Level 2.”
  [Administrator Settings] → [Security Settings] → [Administrator Security Levels]

A. Use

- Sets whether to automatically rotate images to print if the original and specified paper directions are not consistent with each other.

B. Procedure

- The default setting is ON.

“ON” OFF

10.5.35 Copier Settings-Finishing Program

A. Use

- Configure whether to display the Finishing Program button in the basic settings screen. To display the button, register the contents of the finishing program. Register frequently used finishing functions so that you can set them at once by using the button that appears in the basic settings screen.

B. Procedure

- The default setting is ON.

"ON" OFF

- When selecting "ON," select the contents to be registered in the finishing program.

10.5.36 Copier Settings-Card Shot Settings

- It will be displayed in bizhub C652/C552 machines where the function version is version 2 or later and in all bizhub C452 machines.
- [It will be displayed only when the following setting is set to "Level 2." [Administrator Settings] → [Security Settings] → [Administrator Security Levels]

A. Layout

(1) Use

- To set the initial copy layout setting in card shot mode.

(2) Procedure

- The default setting is Top/Bottom.

"Top/Bottom" Left/Right (Top Half) Left/Right

B. Zoom

(1) Use

- To set the initial zoom setting in card shot mode.

(2) Procedure

- The default setting is Full Size.

"Full Size" x 1.0

C. Store Original Size

(1) Use

- To pre-register original sizes that are used in card shot mode.

(2) Procedure

- Enter an original size, name it, and register the data.

10.5.37 Scan/Fax Settings-JPEG Compression Level

A. Use

- To set the JPEG compression method when scanning with JPEG while in scan/fax mode.

  High Quality : Lowers the compression rate and puts priority in quality while scanning.

  Standard : Compression rate and quality are normally balanced while scanning.

  High Compression : Makes the compression rate higher and puts priority in lowering the data volume while scanning.

B. Procedure

- The default setting is Standard.

High Quality "Standard" High Compression

10.5.38 Scan/Fax Settings-Black Compression Level

A. Use

- To set the black compression method for scanning in the black mode while in scan/fax mode.

B. Procedure

- The default setting is MMR.

MH "MMR"

10.5.39 Scan/Fax Settings-TWAIN Lock Time

- It will not be displayed when the optional image controller IC-412 is mounted.

A. Use

- To set the period of time for unlocking the operation panel while in TWAIN scanning.

B. Procedure

- The default setting is 120 sec.

"120 sec." (30 to 300 sec.)

10.5.40 Scan/Fax Settings-Default Scan/Fax Settings

- This menu is unavailable if user authentication is not made while either of authentication devices is set to set in the [Service Mode] → [Billing Setting] → [Management Function Choice].
- This menu is not available when the key counter is set or when a warning appears to inform that the vendor's main power switch needs to be checked or coins (a card) are not inserted under the condition where the vendor is set to Set in the [Service Mode] → [Billing Setting] → [Management Function Choice].

A. Use

- To make default settings for the fax/scan mode.

* The machine is initialized at the following timings:
- The main power switch is turned ON.
- Panel is reset.
- In an Interrupt mode.
- Auto Reset
- The password entry screen for account track is changed.

B. Procedure

<Current Setting>

- The settings made on the control panel before entering the setting menu screens are registered as the default settings of fax/scan functions.

<Factory Default>

- The settings made at the time of shipment from the factory are registered as the default settings of fax/scan functions.

10.5.41 Scan/Fax Settings-Default Enlarge Display Settings

- Displayed only when you select [Utility/Counter] → [User Settings] → [Scan/Fax Settings] in the enlarge display mode.

A. Use

- To make default settings for the enlarge display mode.

* The machine is initialized at the following timings:
- The main power switch is turned ON.
- Panel is reset.
- In an Interrupt mode.
- Auto Reset
- The password entry screen for account track is changed.

B. Procedure

<Current Setting>

- The settings made on the control panel before entering the setting menu screens are registered as the default settings of fax/scan functions.

<Factory Default>

- The settings made at the time of shipment from the factory are registered as the default settings of fax/scan functions.

10.5.42 Scan/Fax Settings-Compact PDF/XPS Compression Level

A. Use

- Selects a compression method applied to scanned data that is produced with the use of Compact PDF/XPS in the scan/fax mode.
  - High Quality : Lowers the compression rate and puts priority in quality while scanning.
  - Standard : Compression rate and quality are normally balanced while scanning.
  - High Compression : Makes the compression rate higher and puts priority in lowering the data volume while scanning.

B. Procedure

- The default setting is Standard.

High Quality "Standard" High Compression

10.5.43 Scan/Fax Settings-Color TIFF Type

A. Use

- Select the compression level used for saving TIFF format data in color.
  - TIFF(TTN2) : Scan in TTN2.
  - TIFF(modified TAG) : Scan in modified TAG.

B. Procedure

- The default setting is TIFF(TTN2).

"TIFF(TTN2)" TIFF(modified TAG)

1 10.5.44 Scan/Fax Settings-OCR Operation Setting

- It will be displayed in bizhub C652/C552 machines where the function version is version 2 or later and in all bizhub C452 machines.
- It will be displayed only when the optional i-Option (LK-105) is activated.

A. Use

- To set the method of OCR operation where a searchable PDF file is created.

B. Procedure

- The default setting is Prioritize Quality.

"Prioritize Quality" Prioritize Speed

1 10.5.45 Scan/Fax Settings-Graphic Outlining

- It will be displayed in bizhub C652/C552 machines where the function version is version 2 or later and in all bizhub C452 machines.

A. Use

- To set the precision of outline conversion where outline PDFs are created.
- To set the processing level where scanned document is divided into text areas and image areas and the text is converted to outlines.

B. Procedure

- The default setting is OFF.

"OFF" LOW MIDDLE HIGH

10.5.46 Printer Settings-Basic Settings

A. PDL Setting

(1) Use

- To set the PDL (Page Description Language) for PC printing.

(2) Procedure

- The default setting is Auto.

"Auto" PCL PS

B. Number of Copies

(1) Use

- To set the number to be copied when not specified by the printer driver during PC printing.
- To use when the number cannot be specified by the printer driver during printing from Windows DOS, etc.

(2) Procedure

- The default setting is 1.

"1" (1 to 9999)

C. Original Direction

(1) Use

- To set the default setting for the direction of the original during PC printing.

(2) Procedure

- The default setting is Portrait.

"Portrait" Landscape

D. Spool Print Jobs in HDD before RIP

(1) Use

- To set whether to store the print data to HDD when receiving the next job during RIP process of the current job.

(2) Procedure

- The default setting is ON

"ON" OFF

E. A4/A3 ↔ LTR/LGR Auto Switch

(1) Use

- To set whether to switch between A4 and Letter (8 $^{1}/_{2}$ x 11) size paper, and A3 and Ledger (11 x 17) size paper in reading.

NOTE

- **When switching the size, the image will be printed in the same magnification.**
- **The image will not be reduced when there is image deficiency.**

(2) Procedure

- The default setting is OFF.

ON "OFF"

F. Banner Sheet Setting

(1) Use

- To set whether or not to print on the banner (front cover) page.

(2) Procedure

- The default setting is OFF.

ON "OFF"

G. Binding Direction Adjustment

(1) Use

- Specifies the alignment between the sides of paper (binding position adjustment) in duplex printing.
- To achieve faster printing performance, select Productivity Priority. To address misalignment problems between sides of copies in the horizontal and vertical directions, select Finishing Priority.

  Finishing Priority : Able to optimize sides aligning operation as the process is performed after the machine receives all of the print data.
  Productivity Priority : Able to accelerate print speed as sides alignment proceeds together with data reception and print operation.
  Control Adjustments : Comply with the command from the printer driver and does not take the side alignment step.

(2) Procedure

- The default setting is Finishing Priority.

"Finishing Priority" Productivity Priority Control Adjustments

H. Line Width Adjustment

(1) Use

- To correct line width of the output data during PC print.

(2) Procedure

- The default setting is Thin.

"Thin" Normal Thick

I. Gray Background Text Correction

(1) Use

- Letters or lines on a gray background may look thicker than those on a non-gray background.

  ON : Makes characters and lines on a grayscale background thicker and sharpens the outlines of characters and figures
  OFF : Makes grayscale background text correction by selecting Thin, Normal, or Thick in [Line Width Adjustment]. If selecting "ON" makes lines too thick, select "OFF."

(2) Procedure

- The default setting is ON

"ON" OFF

J. Gray Background Text Correction (Fiery Controller)

- It will be displayed when the optional image controller IC-412 is mounted.

(1) Use

- To make thin lines and small characters on a grayscale background more visible by correcting their line width when the optional image controller IC-412 is installed.
  - ON : Makes characters and lines on a grayscale background thicker and sharpens the outlines of characters and figures.
  - OFF : Makes grayscale background text correction by selecting Thin, Normal, or Thick in [Line Width Adjustment] If selecting “ON” makes lines too thick, select “OFF.”

(2) Procedure

- The default setting is ON

“ON” OFF

10.5.47 Printer Settings-Paper Setting

A. Paper Tray

(1) Use

- To set the paper feed tray when not specified by the printer driver during PC printing.
- To use when paper feed tray cannot be specified by the printer driver when printing from Windows DOS, etc.

(2) Procedure

- The default setting is Auto.

B. Paper Size

(1) Use

- To set the paper size when not specified by the printer diver during printing.
- To use when the paper size cannot be specified by the printer driver during printing from Windows DOS, etc.

C. 2-Sided Print

(1) Use

- To set whether to carry out duplex print during PC printing when not specified by the printer driver.
- To use when 2-sided printing cannot be specified by the printer driver while printing by Windows DOS, etc.

(2) Procedure

- The default setting is OFF.

ON “OFF”

D. Binding Position

(1) Use

- To set the binding direction during duplex printing when not specified by the printer driver during PC printing.
- To use when binding direction cannot be specified by the printer driver during printing by Windows DOS, etc.

(2) Procedure

- The default setting is Left Bind.

Top Bind "Left Bind" Right Bind

E. Staple

- It will be displayed only when the optional finisher is mounted.

(1) Use

- To set whether to staple or not when not specified by the printer driver during PC printing.
- To use hen staple is not specified by the printer driver during printing by the Windows DOS, etc.

(2) Procedure

- The default setting is OFF.

1 Position 2 Position "OFF"

F. Punch

- It will be displayed only when the optional finisher and punch kit are mounted.

(1) Use

- To select whether to make punch-holes or not when not specified by the printer driver during PC printing.
- To use when the printer driver cannot specify punching during printing from Windows DOS, etc.

(2)

- The default setting is OFF.

2-Hole/3-Hole/4-Hole "OFF"

* The number of punch holes being set is available from [Service Mode] → [Finisher].

G. Banner Paper Tray

(1) Use

- To set the feed tray for printing on the banner (front cover) page.

(2) Procedure

- The default setting is Auto.

10.5.48 Printer Settings-PCL Settings

A. Font Settings

(1) Use

- To set the font when not specified by the printer driver during PC printing.
- To use when the printer driver cannot specify the font during printing from Windows DOS, etc.
- It can be selected from the Resident font or the download font.

(2) Procedure

- The default setting is Courier.

1. When selecting from the Internal font, touch [Internal], and select the one from the displayed font list.

B. Symbol Set

(1) Use

- To set the font symbol set when not specified by the printer driver during PC printing.
- To use when the font symbol set cannot be specified by the printer driver during printing from Windows DOS, etc.

(2) Procedure

- The default setting is Roman-8 or PC8, Code Page 437.

C. Font Size

(1) Use

- To set the font size when not specified by the printer driver during PC printing.
- To set the font size when it cannot be specified by the printer driver during printing from Windows DOS, etc.
- To set scalable font (: Point) and bitmap font (: Pitch) respectively.

(2) Procedure

- The default setting is
  Scalable Font : 12.00 points
  Bitmap Font : 10.00 pitch

D. Line/Page

(1) Use

- To set the number of lines per page for printing the text data.

(2) Procedure

- Default setting value differs depending on the values by the following two different settings. [Utility] → [User Setting] → [Printer Setting] → [Basic Setting] → [Original Direction] [Utility] → [User Setting] → [Printer Setting] → [Paper Setting] → [Default Paper Size]

"60 or 64 lines" (5 to 128)

E. CR/LF Mapping

(1) Use

- To set the mode for replacing data when printing the text data.
  Mode 1 : CR → CR-LF LF=LF FF=FF
  Mode 2 : CR=CR LF→CR-LF FF→CR-FF
  Mode 3 : CR→CR-LF LF→CR-LF FF→CR-FF
  OFF : Does not replace

(2) Procedure

- The default setting is OFF.

Mode 1 Mode 2 Mode 3 “OFF”

10.5.49 Printer Settings-PS Setting

A. Print PS Errors

(1) Use

- To set whether to print or not the error information when an error occurred during PS rasterizing.

(2) Procedure

- The default setting is OFF.

ON “OFF”

B. ICC Profile Settings

(1) Use

- To select a profile to be used for print jobs from a computer when a profile is not specified by printer driver.
- Possible to set a profile separately for each of the following items.
  Photo-RGB Color
  Photo-Output Profile
  Text-RGB Color
  Text-Output Profile
  Figure/Table/Graph-RGB Color
  Figure/Table/Graph-Output Profile
  Simulation Profile

(2) Procedure

- The default settings are shown below.

Photo-RGB Color	: Device Color
Photo-Output Profile	: Auto
Text-RGB Color	: Device Color
Text-Output Profile	: Auto
Figure/Table/Graph-RGB Color	: Device Color
Figure/Table/Graph-Output Profile	: Auto
Simulation Profile	: None

C. Auto Trapping

(1) Use

- Select this option to superimpose neighboring colors to print so as to prevent white space being generated around a picture.
  - ON : Adjacent colors are overprinted. If white lines appear at borders of colors on a graph or figure, select "ON."
  - OFF : The data is printed as is without being trap-processed.

NOTE

- **If color-dulling results at the border of colors when "ON" is selected, change it to "OFF."**
- **Trapping process is sometimes specifiable with the application. When the trapping process is specified in the application, select "OFF" on the machine side.**

(2) Procedure

- The default setting is OFF.

ON "OFF"

D. Black Overprint

(1) Use

- Select this option to print with no white space around black characters or figures.
  - Text/Figure : Adjacent portion between a text and figure is overprinted with black. Use this setting when a white line appears around the black portion in a graph or figure.
  - Text : Black is overprinted on the adjacent colors in the text portion. Use this setting when a white line appears around the text.
  - OFF : The data is printed as is without overprinting with black.

NOTE

- **If color-dulling results around the black portion when "ON" is selected, change it to "OFF."**
- **The black overprinting process is sometimes specifiable with the application. When the trapping process is specified in the application, select "OFF" on the machine side.**

(2) Procedure

- The default setting is OFF.

Text/Figure Text "OFF"

10.5.50 Printer Settings-XPS Settings

- This is displayed only when the function enhanced version 2 or later firmware is installed.

A. Verify XPS Digital Signature

(1) Use

- Selects whether to verify digital signatures attached to XPS (XML Paper Specification) files when printing the files.
- When digital signature verification is selected, files with invalid digital signatures are not printed.

(2) Procedure

- The default setting is OFF.

ON "OFF"

10.5.51 Printer Settings-Print Reports

- It will not be displayed when the following setting shows that authentication device 1 or vendor is mounted.
  [Service Mode] → [Billing Setting] → [Management Function Choice]
  (It will be displayed when the key counter is mounted.)

A. Use

- To output the report or demo page concerning the print setting.
- To check the setting concerning the printer.
  The types of report available for output are as follows.
  Configuration Page : The list of printer setting will be output.
  Demo Page : The test page will be output.
  PCL Font List : PCL font list will be output.
  PS Font List : PS font list will be output.

B. Procedure

1. Touch [User Setting] → [Printer Setting] → [Print Reports].
2. Select the report to be output.
3. Select the feed tray.
4. Select simplex or duplex print, and touch the Start key.

10.5.52 Printer Settings-TIFF Image Paper Setting

A. Use

- Select this option to configure how to determine the paper size when directly printing TIFF or JPEG image data.
  Auto : Select this option to calculate the size of the image based on its resolution and the number of pixels to print the image on paper that fits the image size.
  Select this option to print images on paper of the same size as the image.
  Priority Paper Size : Select this option to print on paper of the priority paper size specified on the machine. If the image size is larger than the paper size, it is automatically reduced.

NOTE

- **When "Auto" is selected and paper larger than the image size is not in the paper trays, paper size error occurs.**

B. Procedure

- The default setting is Auto.

"Auto" Priority Paper Size

10.5.53 Change Password

- When conducting user authentication (MFP only), it will be displayed only when the authentication is complete.
- This menu is available only when box administrator authentication is established during user authentication or account track.

A. Use

- To modify the password used for the user authentication.

B. Procedure

- Enter the user authentication password with the keys on the control panel.

Current Password : Enter the user authentication password currently used.
New Password : Enter the new user authentication password to be used.
Retype Password : Enter the new user authentication password again.

NOTE

- **When [Password Rules] which can be displayed by the following setting is set to "ON", password using the single letter or the password same with the previous one, less than 8-digit will not be modified.**
  [Utility] → [Administrator Settings] → [Security Setting]
- **When the following setting is set to "ON", entering the incorrect password three times will cause access lock. When an access lock occurred, turn the main power switch OFF, and wait for 10 seconds or more and turn main power switch ON again to enter the password again.**
  [Administrator Settings] → [Security Setting] → [Enhanced Security Mode]

10.5.54 Change E-mail Address

- When conducting user authentication (MFP only), it will be displayed only when the authentication is complete.
- It will be displayed only when the following setting is set to "Level 2."
  [Administrator Settings] → [Security Settings] → [Administrator Security Levels]

A. Use

- To modify the e-mail address which is registered as a user.

B. Procedure

- Enter the new e-mail address using the keys on the control panel.

10.5.55 Change Icon

- When conducting user authentication, it will be displayed only when the authentication is complete.

A. Use

- Change the icon specified as registered user information.

B. Procedure

- Select the icon and press [OK].

10.5.56 Register Authentication Settings

- It will be displayed in bizhub C652/C552 machines where the function version is version 2 or later and in all bizhub C452 machines.
- It will be displayed when user authentication (MFP) is completed and the following is met; [Biometric/IC Card Info. Registration] is set to “Allow” in [Utility] → [Administrator Settings] → [System Settings] → [Restrict User Access] → [Restrict Access to Job Settings].

A. Use

- To enable users to register or delete their own biometric/IC card information.

10.5.57 Registered Application Setting-Default Application Selection

- It will be displayed in bizhub C652/C552 machines where the function version is version 2 or later and in all bizhub C452 machines.
- It will be displayed only when the intermediate authentication server is used for user authentication and user authentication is completed.
  However, it cannot be displayed depending on the setting of the application side.

A. Use

- For each user, set the application that is started just after the intermediate authentication.

B. Procedure

- As the applications registered in MFP appear, select an application you wish to set as the one to be started at the beginning, and touch [OK].

10.5.58 Cellular Phone/PDA Setting-Link File Error Notification

- It will be displayed only when the optional local interface kit EK-605 is mounted.
- It will be displayed in bizhub C652/C552 machines where the function version is version 2 or later and in all bizhub C452 machines.

A. Use

- To set whether to print a job where a link error occurs when you are trying to print a web page and its links (page or file) from a cellular phone or PDA.

B. Procedure

- The default setting is Yes.

“Yes” No

10.5.59 Cellular Phone/PDA Setting-Proxy Server Use

- It will be displayed only when the optional local interface kit EK-605 is mounted.
- It will be displayed in bizhub C652/C552 machines where the function version is version 2 or later and in all bizhub C452 machines.

A. Use

- To set whether to use a proxy server when communicating with a cellular phone or PDA.

B. Procedure

- The default setting is No.

Yes “No”

10.5.60 Cellular Phone/PDA Setting-Print Settings

- It will be displayed only when the optional local interface kit EK-605 is mounted.
- It will be displayed in bizhub C652/C552 machines where the function version is version 2 or later and in all bizhub C452 machines.

A. Use

- To set different print settings used when printing from a cell phone or PDA.

B. Procedure

- The following items can be set.
  Basic : 1-sided/2-sided, Full Color/Black, Paper, Finishing
  Application : Page Margin, Stamp/Composition

10.6 Administrator Settings

- The Administrator Settings will be available by entering the administrator password (8 digits) set by the Administrator Settings or Service Mode.
  (The administrator password is initially set to "12345678.")

NOTE

- **When the following setting is set to "ON", entering the incorrect administrator password three times will cause access lock.**
  The access lock is released after the lapse of a predetermined period of time after the main power switch is turned OFF and then ON more than 10 seconds later.
  The access lock can be released by touching keys as follows.
  [Service Mode] → [Enhanced Security] → [Administrator unlocking].

10.6.1 System Settings-Power Save Settings

A. Low Power Mode Settings

(1) Use

- To set the time until low power starts operating after the last key operation has been completed.
  Low power: To turn LED and LCD OFF, and lower the power consumption.

(2) Procedure

- Use the 10-key pad for setting.
- The default setting is 15 min.

"15 min." (10 to 240)

B. Sleep Mode Settings

(1) Use

- To set the time until sleep mode starts operating after the last key operation has been completed.
- Turn all lines OFF except 5 V line for control.
- "OFF" will only be displayed when "No Sleep" in Service Mode is set.

NOTE

- **The sleep mode will begin in 48 hours even if it sets it to "OFF."**

(2) Procedure

- Use the 10-key pad for setting.
- The default setting is 30 min.

"30 min." (15 to 240) / OFF

C. Power Save Key

(1) Use

- To set the type of the power save mode which starts by pressing the Power Save key.

(2) Procedure

- The default setting is Low Power.

"Low Power" Sleep

D. Enter Power Save Mode

(1) Use

- To set whether to immediately switch to the power save mode after printing in case of receiving the fax/PC print during power save mode.
  Normal : Switches to the power save mode according to the normal power save mode after the printing.
  Immediately : Switches to the power save mode immediately after the printing.

(2) Procedure

- The default setting is Normal.

"Normal" Immediately

10.6.2 System Settings-Output Settings

A. Print/Fax Output Settings

(1) Use

- To set the timing for printing for the PC print job or fax received.
  Batch Print : Starts printing when all data are received
  Page Print : Starts printing every time data for each page are received

(2) Procedure

<Printer>

- The default setting is Page Print.

<Fax>

- The default setting is Batch Print.

NOTE

- **[FAX] will be displayed only when the optional fax kit (FK-502) is mounted.**

B. Output Tray Settings

⚠1 • It will be displayed when the optional finisher FS-526/527 or the job separator JS-504 is mounted.

(1) Use

- To set the priority output tray for each application (Copy print, Printer, Fax and Print Reports).

(2) Procedure

- The default settings are as follows.
  Copy : Tray 1
  Print : Tray 1
  Report Output : Tray 2
  Fax : Tray 2

⚠1 • [Tray 3] will be displayed only when the job separator JS-603 is mounted to the finisher FS-527.

C. Shift Output Each Job

- It will be displayed when the optional finisher FS-526/527 or the job separator JS-504 is mounted.

(1) Use

- To set whether to offset each job when paper is printed using the finisher.
- Some paper type may fail to be discharged or get deteriorated loading when large volume copies are printed using the finisher.
  This function is used to print large volume copies when finisher is mounted.
  (When this function is set to “No”, the paper is discharged without offsetting the paper to the center of the tray.)

(2) Procedure

- The default setting is Yes.

“Yes” No

10.6.3 System Settings-Date/Time Settings

A. Use

- To set the date/time and the time zone to start the clock.
- This setting should be carried out for set up.

B. Procedure

- For time zone, set the time difference with the world standard time.
- Setting range for the time zone: -12:00 to +12:00 (by 30 minutes)
- When the following setting is set to “ON”, [Set Data] will be displayed. Touch [Set Data] and modify the time.
  [Administrator Settings] → [Network Settings] → [Detail Settings] → [Time Adjustment Setting]

10.6.4 System Settings-Daylight Saving Time

A. Use

- To set whether to set the daylight saving time.
- To set the time difference in setting the daylight saving time.

B. Procedure

- The default setting is No.

Yes “No”

- When setting to ON, set the time difference to move up.
  “60 min.” (1 to 150)

10.6.5 System Settings-Weekly Timer Settings

A. Weekly Timer ON/OFF Settings

(1) Use

- To set whether to use or not to use the weekly timer.

(2) Procedure

- The default setting is OFF.

ON "OFF"

B. Time Settings

(1) Use

- To set the time to turn ON/OFF the weekly timer for each day of the week.

(2) Procedure

1. Touch the key of the day to be set.
2. Using the 10-key pad, input the ON time and the OFF time.
3. For cancelling the setting, press [Clear].

C. Date Settings

(1) Use

- To select the date or the day of the week for the weekly timer to function.

(2) Procedure

1. Select the Year/Month with [+] / [-] keys.
2. For setting by the date, touch the appropriate key of the day.
3. For setting by the day of the week, touch the appropriate key of the week by [Daily Setting].
4. Check to make sure that the set key of the day is highlighted, and touch [OK].

D. Select Time for Power Save

(1) Use

- To set the time to turn power OFF/ON when the weekly timer is set and the power is ON.

(2) Procedure

- The default setting is No.

Yes "No"

<Set Time for Power Save>

- Using the 10-key pad, input the time to turn OFF and to turn back ON again.

E. Password for Non-Business Hours

(1) Use

- To set whether to input the password before using when the weekly timer is set.

(2) Procedure

- The default setting is No.

Yes "No"

- When setting to Yes, enter the password (eight digits).

10.6.6 System Settings-Restrict User Access

A. Copy Program Lock Settings

(1) Use

- To set the prohibition for modifying the registered copy program.

(2) Procedure

1. Touch the key for the appropriate copy program.
2. Touch [OK].

B. Delete Saved Copy Program

(1) Use

- To delete the registered program job.

(2) Procedure

1. Touch the appropriate program job.
2. Touch [Delete].
3. Touch [Yes] on the check screen to delete the program job.

C. Restrict Access to Job Settings

- It will not be displayed when the following setting shows that authentication device 1 or vendor 2 is mounted.
  [Service Mode] → [Billing Setting] → [Management Function Choice]

(1) Changing Job Priority

<Use>

- To set whether to allow or restrict the change on the print priority for the job.

<Procedure>

- The default setting is Allow.

"Allow" Restrict

(2) Delete Other User Jobs

<Use>

- To set whether to allow or restrict job delete by other users when the user is authenticated.

<Procedure>

- The default setting is Restrict.

Allow "Restrict"

(3) Registering and Changing Addresses

<Use>

- To set whether to allow or restrict the change of the registered address.

<Procedure>

- The default setting is Allow.

"Allow" Restrict

NOTE

- **[Allow] cannot be selected when the following setting is set to "ON".**
  [Administrator Settings] → [Security Setting] → [Enhanced Security Mode]

(4) Changing Zoom Ratio

<Use>

- To set whether to allow or restrict the change on the registered magnification.

<Procedure>

- The default setting is Allow.

"Allow"	Restrict

(5) Change the "From" Address

<Use>

- To set whether or not to prohibit the registered from address to be changed.

<Procedure>

- The default setting is Allow.

"Allow"	Restrict

(6) Change Registered Overlay

<Use>

- Selects allow or restrict for the change of registered overlay.

<Procedure>

- The default setting is Allow.

"Allow"	Restrict

(7) Biometric/IC Card Info. Registration

- It will be displayed in bizhub C652/C552 machines where the function version is version 2 or later and in all bizhub C452 machines.

<Use>

- Allow or restrict the registration or deletion of authentication information.

<Procedure>

- The default setting is Allow.

"Allow"	Restrict

D. Restrict Operation

(1) Restrict Broadcasting

<Use>

- To set whether or not to prohibit sending the fax to more than one address.

<Procedure>

- The default setting is OFF.

ON	"OFF"

10.6.7 System Settings-Expert Adjustment

- It will not be displayed when the following setting shows that vendor 2 is mounted.
  [Service Mode] → [Billing Setting] → [Management Function Choice]
  (It will be displayed when the Key Counter is mounted or when the following setting shows that switch No.33 is set to [01] at HEX assignment.
  [Service Mode] → [System 2] → [Software Switch Setting])

A. AE Level Adjustment

(1) Use

- To set the default setting for AE (Auto Exposure) the larger the value becomes the more emphasized the background will be.
  To make the background level foggier : Increase the setting value
  To make the background level less foggy : Decrease the setting value

(2) Procedure

- The default setting is 2.

"2" (0 to 4)

B. Printer Adjustment

(1) Leading Edge Adjustment

- It will not be displayed when the following setting shows that Management Device 1 is mounted during the device power is OFF or no authentication is set.
  [Service Mode] → [Billing Setting] → [Management Function Choice]
- This menu is unavailable when the key counter is not inserted while only the key counter is set to Set by [Service Mode] → [Billing Setting] → [Management Function Choice].

<Use>

- To vary the print start position in the sub scan direction for each of different paper types in the manual bypass tray.
- The PH unit has been replaced.
- The paper type has been changed.
- The print image deviates in the sub scan direction.
- A faint image occurs on the leading edge of the image.
- Able to make an individual adjustment for each paper type of plain paper, thick 1/1+, thick 2, thick 3, thick 4, transparencies, and envelopes.

<Procedure>

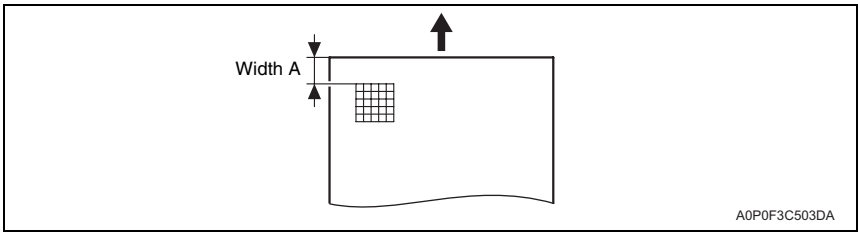

Width A on the test pattern produced should fall within the following range.

Specifications: 4.2 ± 0.5 mm
Setting range: -3.0 mm to +3.0 mm (in 0.2 mm increments)

1. Place A3 paper on the manual bypass tray.
2. Call the Administrator Settings to the screen.
3. Touch [System Settings] → [Expert Adjustment] → [Printer Adjustment] → [Leading Edge Adjustment].
4. Select the [Normal].
5. Press the Start key to let the machine produce a test print.
6. Check the dimension of width A on the test print.
7. If width A falls outside the specified range, change the setting using the [+] / [-] key.
   If width A is longer than the specifications, make the setting value smaller than the current one.
   If width A is shorter than the specifications, make the setting value greater than the current one.
8. Press the Start key to let the machine produce a test print.
9. Check the dimension of width A on the test print.
10. If width A is outside the specified range, change the setting again and make a check again.
11. If width A falls within the specified range, touch [OK].
12. Following the same procedure, adjust for thick 1 to 3, OHP, and envelope.

(2) Centering

- It will not be displayed when the following setting shows that Management Device 1 is mounted during the device power is OFF or no authentication is set.
  [Service Mode] → [Billing Setting] → [Management Function Choice]
- This menu is unavailable when the key counter is not inserted while only the key counter is set to Set by [Service Mode] → [Billing Setting] → [Management Function Choice].

<Use>

- To vary the print start position in the main scan direction for each paper source.
- The PH unit has been replaced.
- A paper feed unit has been added.
- The print image deviates in the main scan direction.

<Procedure>

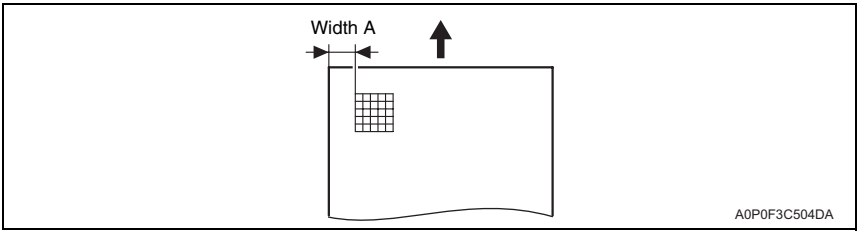

Width A on the test print produced should fall within the following range.

Specifications: 3.0 ± 0.5 mm
Setting range: -3.0 mm to +3.0 mm (in 0.2 mm increments)

1. Call the Administrator Settings to the screen.
2. Touch [System Settings] → [Expert Adjustment] → [Printer Adjustment] → [Centering].
3. Select the paper source to be adjusted.
4. Press the Start key to let the machine produce a test print.
5. Check the dimension of width A on the test print.
6. If width A falls outside the specified range, change the setting using the [+] / [-] key.
   If width A is longer than the specifications, make the setting value smaller than the current one.
   If width A is shorter than the specifications, make the setting value greater than the current one.
7. Press the Start key to let the machine produce a test print.
8. Check the dimension of width A on the test print.
9. If width A is outside the specified range, change the setting again and make a check again.
10. If width A falls within the specified range, touch [OK].
11. Following the same procedure, adjust for all other paper sources.
    (Use A4 or 8 $^{1}/_{2}$ × 11 plain paper for the bypass.)

(3) Leading Edge Adjustment (Duplex Side 2)

- It will not be displayed when the following setting shows that Management Device 1 is mounted during the device power is OFF or no authentication is set.
  [Service Mode] → [Billing Setting] → [Management Function Choice]
- This menu is unavailable when the key counter is not inserted while only the key counter is set to Set by [Service Mode] → [Billing Setting] → [Management Function Choice].

<Use>

- Makes an adjustment by changing the image write start position in the sub scan direction on the 2nd side of duplex printing for individual types of paper.
- When the 2nd side image on paper fed from the tray is shifted in the sub scan direction.
- Able to make an individual adjustment for each paper type of plain paper, thick 1/1+, thick 2 and thick 3.

<Procedure>

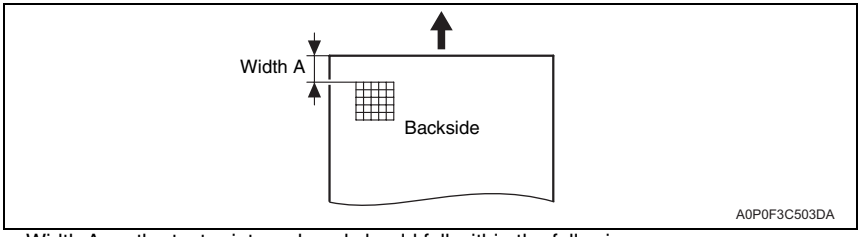

- Width A on the test print produced should fall within the following range.
- For measurement, use the image produced on the backside of the test print.

Specifications: 4.2 ± 0.5 mm
Setting range: -3.0 mm to +3.0 mm (in 0.2 mm increments)

1. Call the Administrator Settings to the screen.
2. Touch [System Settings] → [Expert Adjustment] → [Printer Adjustment] → [Leading Edge Adjustment (Duplex side 2)].
3. Select the [Normal].
4. Press the Start key to let the machine produce a test print.
5. Check the dimension of width A on the test print.
6. If width A falls outside the specified range, change the setting using the [+] / [-] key.
   If width A is longer than the specifications, make the setting value smaller than the current one.
   If width A is shorter than the specifications, make the setting value greater than the current one.
7. Press the Start key to let the machine produce a test print.
8. Check the dimension of width A on the test print
9. If width A is outside the specified range, change the setting again and make a check again.
10. If width A falls within the specified range, touch [OK].
11. Following the same procedure, adjust for thick 1 to 3, OHP, and envelope.

(4) Centering (Duplex 2nd Side)

- It will not be displayed when the following setting shows that Management Device 1 is mounted during the device power is OFF or no authentication is set.
  [Service Mode] → [Billing Setting] → [Management Function Choice]
- This menu is unavailable when the key counter is not inserted while only the key counter is set to Set by [Service Mode] → [Billing Setting] → [Management Function Choice].

<Use>

- To vary the print start position in the main scan direction for each paper source in the 2-sided mode.
- To use when the optional automatic duplex unit AD-503 is set up.
- The image on the backside of the 2-sided copy deviates in the main scan direction.

<Procedure>

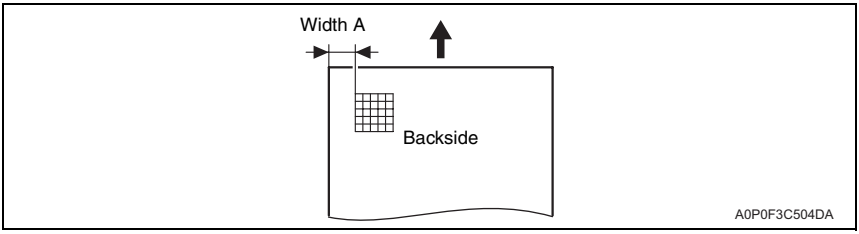

- Width A on the test print produced should fall within the following range.
- For measurement, use the image produced on the backside of the test print.

Specifications: 3.0 ± 0.5 mm
Setting range: -3.0 mm to +3.0 mm (in 0.2 mm increments)

1. Call the Administrator Settings to the screen.
2. Touch [System Settings] → [Expert Adjustment] → [Printer Adjustment] → [Centering (Duplex 2nd Side)].
3. Select the paper source to be adjusted.
4. Press the Start key to let the machine produce a test print.
5. Check the dimension of width A on the test print.
6. If width A falls outside the specified range, change the setting using the [+] / [-] key.
   If width A is longer than the specifications, make the setting value smaller than the current one.
   If width A is shorter than the specifications, make the setting value greater than the current one.
7. Press the Start key to let the machine produce a test print.
8. Check the dimension of width A on the test print on the backside of the copy.
9. If width A is outside the specified range, change the setting again and make a check again.
10. If width A falls within the specified range, touch [OK].
11. Following the same procedure, adjust for all other paper sources.
    (Use A4 or 8 1/2 × 11 plain paper for the manual bypass tray.)

(5) Erase Leading Edge

- It will be displayed only when the following setting is set to “Level 2”.
  [Service Mode] → [Enhanced Security] → [Administrator Feature Level]

<Use>

- To set the leading edge erase amount of the paper.
- To change the width of the area not printed along the leading edge of the paper.
- To make this setting independently for Front and Back sides.

<Procedure>

- The default setting is “4 mm”.

“4 mm” 5 mm 7 mm

(6) Vertical Adjustment

- It will be displayed only when the following setting is set to “Level 2.”
  [Service Mode] → [Enhanced Security] → [Administrator Feature Level]

<Use>

- To synchronize the paper transport speed with the image writing speed.
- The l adjustment becomes necessary.
- The printed image on the copy distorts (stretched, shrunk).
- When the printed image on the copy is stretched in the sub scan direction.
- Able to make an individual adjustment for each paper type of plain paper, thick 1/1+, thick 2, thick 3 and thick 4.

<Procedure>

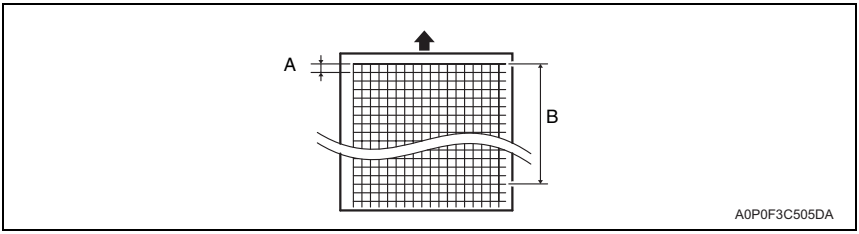

- Width A and width B on the test pattern produced should fall within the following ranges.
  Width A: equivalent to one grid
  Width B: equivalent to 48 grids

Specifications
A: 7.9 to 8.3
B: 389.1 to 392.1

Setting Range
A, B: -7 to +7

1. Load manual bypass tray with A3 or 11 × 17 plain paper.
2. Call the Administrator Settings to the screen.
3. Touch these keys in this order: [System Settings] → [Expert Adjustment] → [Vertical Adjustment].
4. Press the Start key to let the machine produce a test pattern.
5. Check width A (equivalent to one grid) and width B (equivalent to 48 grids) on the test pattern.
6. If width of A or B falls outside the specified range, change the setting using the [+]/[-] keys.
   If width A or B is longer than the specifications, make the setting value smaller than the current one.
   If width A or B is shorter than the specifications, make the setting value greater than the current one.
7. Press the Start key to let the machine produce a test pattern again.
8. Check width A and width B on the test pattern.
9. If width A or B falls outside the specified range, change the setting value and make a check again.
10. If width A or B falls within the specified range, touch [OK].
11. Following the same procedure, adjust for [Thick 1 to 3], [OHP], and [Envelope]. (Check width A only for [OHP] and [Envelope].)

(7) Media Adjustment

<Use>

- Adjust the 2nd image transfer output (ATVC) on the 1st page and the 2nd page for each paper type.
- This function is provided to open [Transfer Output Fine Adjustment] → [2nd Transfer Adjust] of Service Mode up to administrator and the fine-adjusted value is reflected in the Service Mode setting.
- To use when the transfer failure at the trailing edge occurs.
- Pressing the [AUTO] key down activates the 2nd image transfer amperage upper and lower limit control. In this case, the machine uses the voltage determined by the transfer voltage control and the 2nd image transfer output fine adjustment value does not take effect.

<Procedure>

- The default setting is 0.

1. Call the Administrator Settings to the screen.
2. Touch these keys in this order: [Expert Adjustment] → [Printer Adjustment] → [Media Adjustment].
3. Select the side of the image (1st side or 2nd side), on which the transfer failure occurs.

NOTE

- **For envelopes, OHP film and banner thick, only 1st side can be selected.**

4. Select the paper type with the transfer failure.
5. Enter the new setting from the [+] / [-] keys.
   To increase the ATVC value (in the direction of a foggier image), increase the setting value.
   To decrease the ATVC value (in the direction of a less foggy image), decrease the setting value.
6. Touch [OK] to validate the adjustment value.
7. Check the print image for any image problem.

* To automatically control the 2nd image transfer output without using the 2nd image transfer output fine adjustment value, press [Auto].

C. Finisher Adjustment

(1) Center Staple Position

<Use>

- Adjust the stapling position for each paper size when printing with the center staple function.
- Adjust the stapling position for each paper size when printing with the center staple function.

<Procedure>

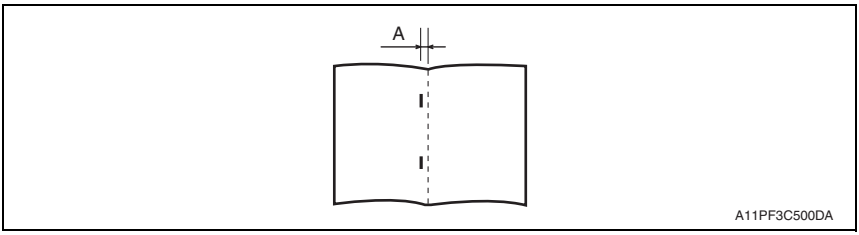

NOTE

- **After half-fold position adjustment, make this center staple position adjustment.**

1. Place five sheets of originals on the ADF.
2. Make a set of copy in the saddle stitching mode.
3. Check the amount of horizontal deviation (A) between the staple and the half fold positions on the set of copy.

Specification A: 0 ± 1.0 mm
Adjustment range: -10.0 mm to +10.0 mm (1 step: 0.1 mm)

4. If (A) is out of the specified range, make the following adjustment.
5. Call the Administrator Settings to the screen.
6. Touch [System Settings] → [Expert Adjustment] → [Finisher Adjustment] → [Center Staple Position].
7. Touch the paper size where staple position is adjusted.
8. Look at the copy and adjust the staple position with the [+]/[-] key.

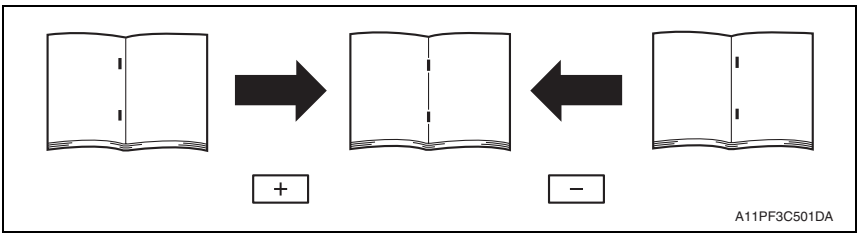

9. Touch [OK].
10. Make another set of copy sample and check the amount of deviation (A).

(2) Half-Fold Position

<Use>

- Use this adjustment to adjust the half-fold position in half-fold printing.

<Procedure>

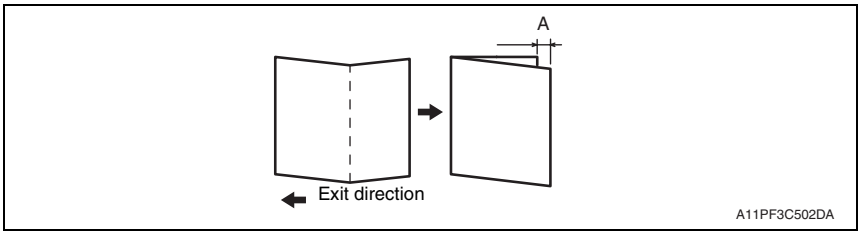

1. Place two sheets of originals on the ADF.
2. Make a copy in the folding mode.
3. Fold the copies along the crease.
4. Measure the amount of deviation (A).

Specification A: 0 ± 1.0 mm
Adjustment range: -10.0 mm to +10.0 mm (1 step: 0.1 mm)

5. If (A) is out of the specified range, make the following adjustment.
6. Call the Administrator Settings to the screen.
7. Touch [System Settings] → [Expert Adjustment] → [Finisher Adjustment] → [Half-Fold Position].
8. Touch the paper size where half-fold position is adjusted.
9. Look at the copy and adjust the half-fold position with the [+]/[-] key.

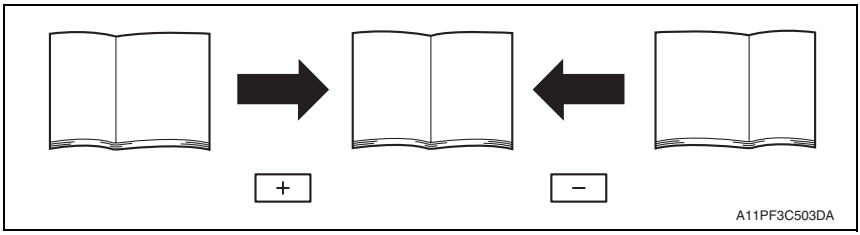

10. Touch [OK].
11. Make another set of copy sample and check the amount of deviation (A).

(3) Tri-Fold Position Adjustment

<Use>

- Use this adjustment to adjust tri-fold position in tri-fold printing.

<Procedure>

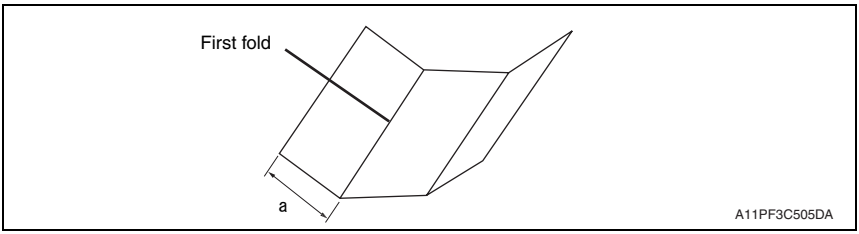

1. Make a copy sample in the tri-folding mode.
2. Check that the tri-fold positions (a) on the copy are within the specified range.

Specification a: 95 mm (A4S), 89.4 mm (8.5x11S), 88 mm (16KS)
Adjustment range: -10.0 mm to +10.0 mm (1 step: 0.1 mm)

3. Call the Administrator Settings to the screen.
4. Touch [System Settings] → [Expert Adjustment] → [Finisher Adjustment] → [Tri-Fold Position Adjustment].
5. Touch the paper size where tri-fold position is adjusted.
6. Look at the copy and adjust the tri-fold position with the [+]/[-] key.
   To make width (a) greater : Enter the value of [+]
   To make width (a) smaller : Enter the value of [-]

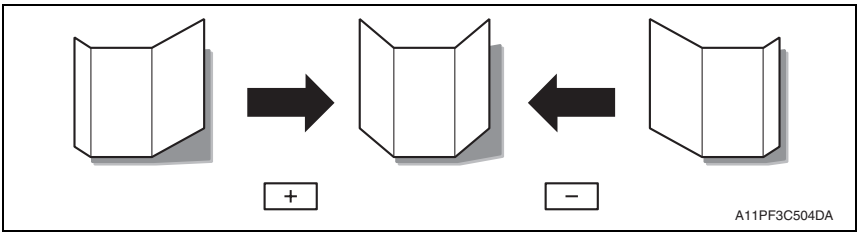

7. Touch [OK].
8. Make another set of copy sample and check the amount of deviation (a).

(4) Punch Vertical Position Adjustment

<Use>

- Adjusts the vertical position of the punch holes.

<Procedure>

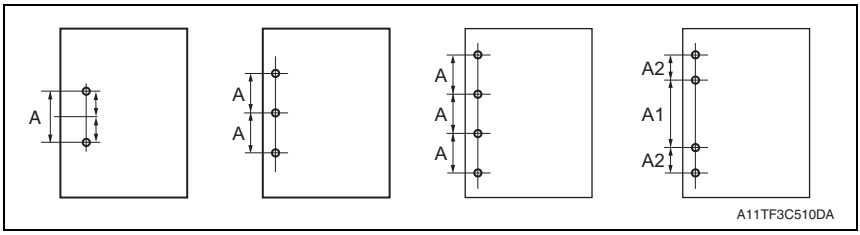

1. Make a copy sample in the punch mode.
2. Make an adjustment so that 1/2 of the length A is within the following standard range.

Specifications:
2-4 hole: A=80 ± 0.5 mm (It is not possible to adjust the A value of the distance between holes.), 1/2 of the vertical length A ± 1.0 mm
2-3 hole (2 hole): A=70 ± 0.5 mm (It is not possible to adjust the A value of the distance between holes.), 1/2 of the vertical length A ± 1.0 mm
2-3 hole (3 hole): A=108 ± 0.5 mm (It is not possible to adjust the A value of the distance between holes.), 1/2 of the vertical length A ± 1.0 mm
SWE4 hole: B1=70 ± 0.5 mm (It is not possible to adjust the A value of the distance between holes.), 1/2 of the vertical length A ± 1.0 mm
SWE4 hole: B2=21 ± 0.5 mm (It is not possible to adjust the A value of the distance between holes.), 1/2 of the vertical length A ± 1.0 mm
Adjustment range: -5.0 mm to +5.0 mm (1 step: 0.1 mm)

3. Call the Administrator Settings to the screen.
4. Touch [System Settings] → [Expert Adjustment] → [Finisher Adjustment] → [Punch Vertical Position Adjustment].
5. Touch the paper size where punch vertical position is adjusted.
6. Look at the copy and adjust the punch vertical position with the [+]/[-] key.
   To move the hole position upward: Enter the value of [+]
   To move the hole position downward: Enter the value of [-]

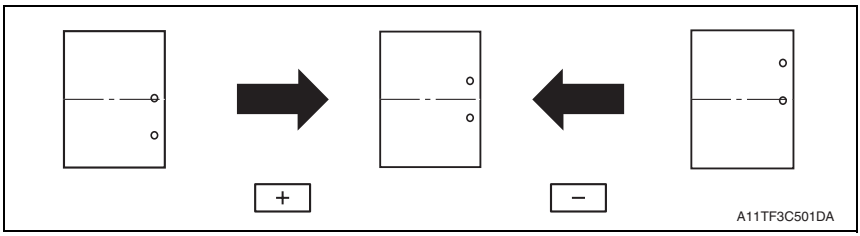

7. Touch [OK].
8. Make another set of copy sample and check the amount of deviation (A).

(5) Punch Horizontal Position Adjustment

<Use>

- To change the horizontal position of the punch holes.

<Procedure>

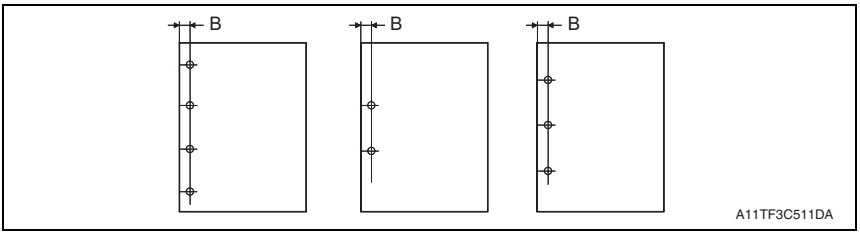

1. Make a copy sample in the punch mode.
2. Make an adjustment so that the width B is within the following range.

<For PK-516>
Specification B: 9.5 mm (2-3 hole), 11.0 mm (2-4 hole), 10.5 mm (SWE4 hole)
Adjustment range: -5.0 mm to +5.0 mm (1 step: 0.1 mm)

<For PK-517>
Specification B: 9.5 mm ± 1.0 mm (2-3 hole), 11.0 mm ± 1.0 mm (2-4 hole),
10.5 mm ± 1.0 mm (SWE4 hole)
Adjustment range: -10.0 mm to +10.0 mm (1 step: 0.1 mm)

3. Call the Administrator Settings to the screen.
4. Touch [System Settings] → [Expert Adjustment] → [Finisher Adjustment] → [Punch Horizontal Position Adjustment].
5. <For PK-516>
   Touch the paper size where punch horizontal position is adjusted.
   <For PK-517>
   Touch the paper type where punch horizontal position is adjusted.
6. Look at the copy and adjust the punch horizontal position with the [+]/ [-] key.
   To make width B greater: Enter the value of [+]
   To make width a smaller: Enter the value of [-]
7.

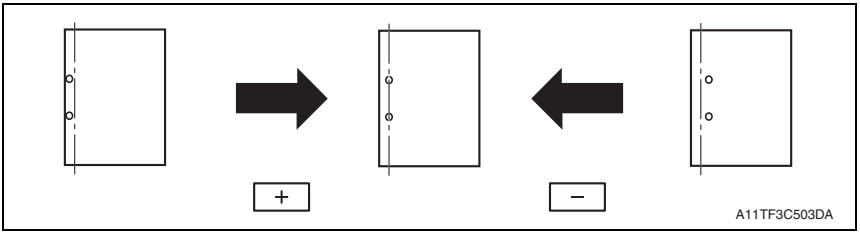

8. Touch [OK].
9. Make another set of copy sample and check the amount of deviation (B).

(6) Punch Regist Loop Size Adjustment

<Use>

- Adjusts the punch loop size used for paper exited from the main body.
- To address problems such as misaligned punch holes, wrinkled paper, and jam at the punch registration section.

<Procedure>

1. Call the Administrator Settings to the screen.
2. Touch [System Settings] → [Expert Adjustment] → [Finisher Adjustment] → [Punch Regist Loop Size Adjustment].
3. Touch the paper size where punch regist loop size is adjusted.
4. Set the correction value using the [+]/[-] keys.
   Misaligned punched holes: Enter the value of [+]
   Wrinkled paper: Enter the value of [-]
5. Touch [OK].

(7) Punch Edge Sensor Adjustment

<Use>

- Adjusts the sensitivity (light intensity) of the PK punch front sensor of the punch kit.
- This adjustment is made at the time of setup.

<Procedure>

1. Call the Administrator Settings to the screen.
2. Touch [System Settings] → [Expert Adjustment] → [Finisher Adjustment] → [Punch Edge Sensor Adjustment].
3. Touch Start key.
4. Confirm that the result is OK.

NOTE

- **When NG appears, check whether the punch kit is properly installed.**

5. Touch [OK].

(8) Vertical Punch (Z-Fold) Position Adjustment

<Use>

- To adjust the position of the punch hole in the sub-scanning direction when ZU is in use.
- Make the adjustment upon setup of ZU-606.

<Procedure>

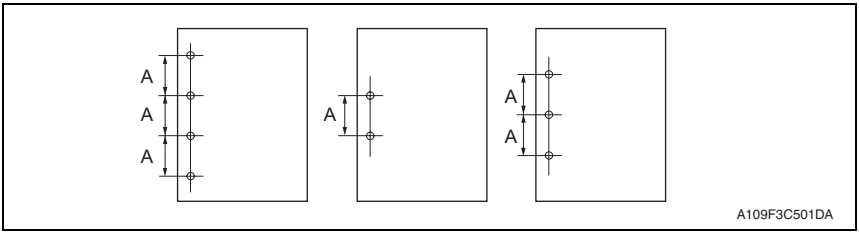

1. Make a copy sample in the punch mode.
2. Make an adjustment so that the width A is within the following range.

Standard value

- It is possible to adjust the A dimension of half of the top and bottom by ± 0.5 mm from the standard value.
- It is not possible to adjust the A value of the distance between holes.

	A	Top and bottom center gap
2-4 hole	80 ± 0.5	Top and bottom A dimension 1/2 ± 1
2-3 hole (2 hole)	70 ± 0.5	
2-3 hole (3 hole)	108 ± 0.5	

Setting range: -5.0 to +5.0 mm (1step = 0.1 mm)

3. Call the Administrator Settings to the screen.
4. Touch [System Settings] → [Expert Adjustment] → [Finisher Adjustment] → [Vertical Punch (Z-Fold) Position Adjustment].
5. Select [ALL] and make the setting using [+] or [-].
   To make width A greater: Enter the Value of [+]
   To make width A smaller: Enter the Value of [-]

NOTE

- **The adjustment setting value used for each paper size is the value set with [ALL] plus the value set for each paper size.**

6. Touch [OK].
7. Make copies in the punch mode again and check that the punch hole positions have been adjusted properly.

(9) Horizontal Punch (Z-Fold) Position Adjustment

<Use>

- To adjust the position of the punch hole in the main scanning direction when ZU is in use.
- Make the adjustment upon setup of ZU-606.

<Procedure>

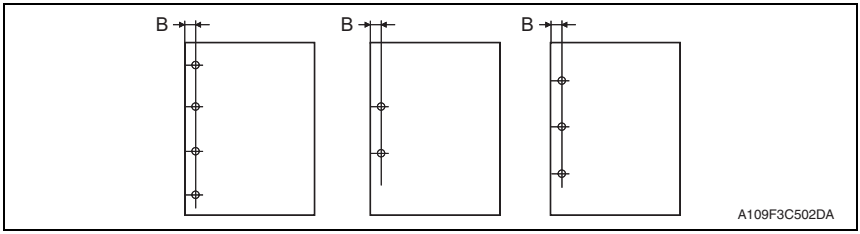

1. Make a copy sample in the punch mode.
2. Make an adjustment so that the width B is within the following range.

Standard value: B = 12.0 mm
Setting range: -5.0 mm to +5.0 mm (Step = 0.1 mm)

3. Call the Administrator Settings to the screen.
4. Touch [System Settings] → [Expert Adjustment] → [Finisher Adjustment] → [Horizontal Punch (Z-Fold) Position Adjustment].
5. Make the setting using [+] or [-].
   To make width B greater: Enter the Value of [+]
   To make width B smaller: Enter the Value of [-]
6. Touch [OK].
7. Make copies in the punch mode again and check that the punch hole positions have been adjusted properly.

(10) 1st Z-Fold Position Adjustment
2nd Z-Fold Position Adjustment

<Use>

- To adjust the positions of the 1st Z-fold and 2nd Z-fold for the Z-fold mode.
- Make the adjustment upon setup of ZU-606.

<Procedure>

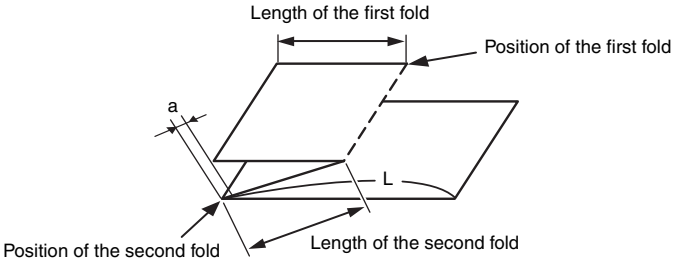

1. Make copies in the Z-fold mode.
2. Make an adjustment so that the width a is within the following range.

	Length of 1st fold	Length a	Length L
11 x 17	108 mm	4.0 ± 2.0 mm	Less than 215 mm
A3	105 mm	4.0 ± 2.0 mm	Less than 209 mm
B4	91 mm	4.0 ± 2.0 mm	Less than 181 mm
8.5 x 14	-	-	Less than 241.7 mm
8K	98 mm	4.0 ± 2.0 mm	Less than 194 mm

Setting range: -12.8 mm to +12.7 mm (Step = 0.1 mm)

NOTE

- **Length of the 1st fold is for standard value.**
- **The adjustable range for B4 size is only between -2.0 mm and +2.0 mm.**
- **8.5 X 14 is available for only an half fold.**

3. Call the Administrator Settings to the screen.
4. Touch [System Settings] → [Expert Adjustment] → [Finisher Adjustment] → [1st Z-Fold Position Adjustment] or [2nd Z-Fold Position Adjustment].
5. Select [ALL] and make the setting using [+] or [-].
   To increase the length of the 1st fold (2nd fold), enter a negative value with [-] key.
   To decrease the length of the 1st fold (2nd fold), enter a positive value with [+] key.

NOTE

- **The adjustment setting value used for each paper size is the value set with [ALL] plus the value set for each paper size.**

6. Touch [OK].
7. Make copies in the Z-fold mode and check for possible deviation from the specified 1st and 2nd Z-fold positions.

⚠1 (11) Punch Unit Size Detect Sensor

<Use>

- To adjust sensitivity (light intensity) of the paper size detect board (PSDTB) of the punch unit of ZU.
- Make the adjustment upon setup of ZU-606.

<Procedure>

1. Call the Administrator Settings to the screen.
2. Touch [System Settings] → [Expert Adjustment] → [Finisher Adjustment] → [Punch Unit Size Detect Sensor].
3. Touch Start key.
4. Confirm that the result is OK.

NOTE

- **When NG appears, check whether the punch unit is properly installed.**

5. Touch [OK].

⚠1 (12) Post Inserter Tray Size Adjustment

<Use>

- To make automatic post inserter size detection adjustments separately in each of the upper and lower trays.
- Make this adjustment at the time of setup or when the post inserter cannot make proper size detection.
- Make this adjustment after performing PI displacement adjustment.

<Procedure>

1. Call the Administrator Settings to the screen.
2. Touch [System Settings] → [Expert Adjustment] → [Finisher Adjustment] → [Post Inserter Tray Size Adjustment].
3. Touch [Upper Tray].
4. Place A4S paper on the upper tray and touch [A4 ▭].
5. Touch Start key.
6. Confirm that the result is OK.
7. Touch [Lower Tray].
8. Place A4S paper on the lower tray and touch [A4 ▭].
9. Touch Start key.
10. Confirm that the result is OK.
11. Touch [OK].

D. Density Adjustment

(1) Thick Paper Image Density-Yellow, Magenta, Cyan, Black

<Use>

- To fine-adjust density of printed images of each color for thick paper and OHP transparencies. (Only black color adjustable for OHP transparencies)
- To change the density of the printed image for each color with thick paper and OHP transparencies

<Procedure>

1. Call the Administrator Settings to the screen.
2. Touch [System Settings] → [Expert Adjustment] → [Density Adjustment].
3. Select a type of thick paper and a color that need to be adjusted.
4. Touch the Lighter or Darker key to correct the image density.
   Light color: Touch the Darker key.
   Dark color: Touch the Lighter key.

(2) Black Image Density

<Use>

- To fine-adjust the density of the printed image for a black print
- To vary the density of the printed image of a black print

<Procedure>

1. Call the Administrator Settings to the screen.
2. Touch [System Settings] → [Expert Adjustment] → [Density Adjustment] → [Black Image Density].
3. Touch the Lighter or Darker key as necessary to correct the image density.
   If the black is light, touch the Darker key.
   If the black is dark, touch the Lighter key.

E. Image Stabilization

(1) Image Stabilization Only

<Use>

- The image stabilization sequence is carried out without clearing the historical data of image stabilization control.
- Use if an image problem persists even after [Gradation Adjustment] has been executed.
- When [D Max Density] and [Background Voltage Margin] of Service Mode are changed.

<Procedure>

1. Call the Administrator Settings to the screen.
2. Touch [System Settings] → [Expert Adjustment] → [Image Stabilization] → [Image Stabilization Only].
3. Press the Start key to start Stabilizer.
   The Start key turns red and stays lit up red during the Stabilizer sequence.
4. Stabilizer is completed when the Start key turns blue.

(2) Initialize+Image Stabilization

<Use>

- To carry out an image stabilization sequence after the historical data of image stabilization control has been initialized.
- Use if an image problem persists even after [Gradation Adjustment] has been executed.
- Use if tone reproduction and maximum density are faulty even after image stabilization has been executed.

<Procedure>

1. Call the Administrator Settings to the screen.
2. Touch [System Settings] → [Expert Adjustment] → [Image Stabilization] → [Initialize+Image Stabilization].
3. Press the Start key to start Stabilizer.
   The Start key turns red and stays lit up red during the Stabilizer sequence.
4. Stabilizer is completed when the Start key turns blue.

(3) Image Stabilization Setting

<Use>

- To change the type and timing of image stabilization.
- To provide the desirable image stabilization control that depends on customer's machine usage pattern, i.e. the ratio of color to black print.

Standard : This mode is suitable for low-volume users and reduces the number of times image stabilization is carried out when the main power switch is turned ON.
If the change of absolute humidity is detected during warm-up, normal stabilization is performed during warm-up.

Color Priority : This mode is suitable for high-volume and high ratio of color print users.
Color stabilization sequence is performed unconditionally when the main power switch and the sub power switch are turned ON.

Black & White Priority : This mode is suitable for users who use mainly black print and use less color print. It provides monochrome stabilization and reduces the number of times image stabilization is carried out when the main power switch is turned ON. If the change of absolute humidity is detected during warm-up, monochrome stabilization is performed during the warm-up and color stabilization is performed before color printing.

<Procedure>

- The default setting is Standard.

"Standard" Color Priority Black & White Priority

F. Paper Separation Adjustment

(1) Use

- For duplex printing of thin paper, the paper separation position is adjusted for the first and second sides of paper.
- To adjust the balance between paper separation and image transfer performances by changing the paper separation position in duplex printing of thin paper (64 g/ m^2) in hot and humid conditions.

(2) Procedure

- The default setting is 0.

1. Call the Administrator Settings to the screen.
2. Touch [System Settings] → [Expert Adjustment] → [Paper Separation Adjustment].
3. Select [Front] or [Back].
4. Change the setting value with [+] or [-] key.
   Priority on paper separation performance: Increase the setting value
   Priority on image transfer performance: Decrease the setting value
5. Touch [OK] to determine the adjusted value.
6. Make a print and check the image.

G. Color Registration Adjust

- It will not be displayed when the following setting shows that Management Device 1 is mounted during the device power is OFF or no authentication is set.
  [Service Mode] → [Billing Setting] → [Management Function Choice]
- This menu is unavailable when the key counter is not inserted while only the key counter is set to Set by [Service Mode] → [Billing Setting] → [Management Function Choice].

(1) Color Registration Adjust (Yellow, Magenta, Cyan)

<Use>

- To adjust color shift if there is any when comparing the original with copy of the plain or thick paper.
- To correct any color shift.
- Able to make an individual adjustment for each paper type of plain paper, thick 1/1+, thick 2, thick 3 and thick 4.

<Procedure>

1. Call the Administrator Settings to the screen.
2. Touch [System Settings] → [Expert Adjustment] → [Color Registration Adjust].
3. Load tray 1 with A3/11x17 or A4/8 $^{1}/_{2}$ x11 normal paper.
4. Press the Start key.
5. On the test pattern produced, check for deviation between the black line and the line of each color at positions X and Y.
6. Select the color to be adjusted.
7. Using the [+] / [-] key, change the setting value as necessary. (At this time, only the line of the selected color moves.)
   If the cross deviates in the direction of A, increase the setting.
   If the cross deviates in the direction of B, decrease the setting.
8. Produce another test pattern and make sure that there is no deviation.

Check Procedure

Check point X, Y

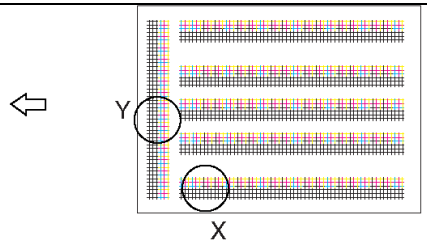

Adjustment for X direction:
Check point X

If the cross deviates in the direction of A, increase the setting.
If the cross deviates in the direction of B, decrease the setting.

Direction of A

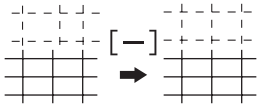

Direction of B

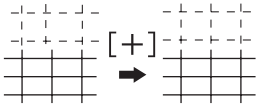

Adjustment for Y direction:
Check point Y

If the cross deviates in the direction of A, increase the setting.
If the cross deviates in the direction of B, decrease the setting.

Direction of A

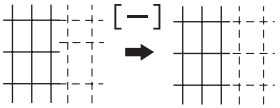

Direction of B

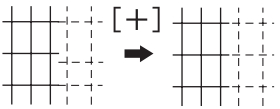

A0P0F3C511DA

H. Gradation Adjustment

- It will not be displayed when the following setting is set to "ON."
  [Service Mode] → [Imaging Process Adjustment] → [Dev. Bias Choice]
- It will not be displayed when the following setting shows that Management Device 1 is mounted during the device power is OFF or no authentication is set.
  [Service Mode] → [Billing Setting] → [Management Function Choice]
- This menu is unavailable when the key counter is not inserted while only the key counter is set to Set by [Service Mode] → [Billing Setting] → [Management Function Choice].

(1) Use

- To make an automatic adjustment of gradation based on the test pattern produced and the readings taken by the scanner.
- Color reproduction performance becomes poor.
- The IU has been replaced.
- The image transfer belt unit has been replaced.

Printer (Gradation) : It gives the highest priority to gradation performance of the image as it adjusts.
Printer (Resolution) : It gives the highest priority to reproduction performance of letters and lines as it adjusts.
Copy : It gives the highest priority to increasing the number of images to be stored in the memory as it adjusts.

(2) Procedure

1. Touch [Stabilizer] and the Start key to perform image stabilization.

NOTE

- **Before executing Gradation adjust, be sure to perform Stabilizer.**

2. Call the Administrator Settings to the screen.
3. Touch [System Settings] → [Expert Adjustment] → [Gradation Adjustment].
4. Select the appropriate mode for the gradation adjustment.
5. Press the Start key to let the machine produce a test pattern.
6. Place the test pattern produced on the original glass.
7. Place ten blank sheets of A3/11 x 17 paper on the test pattern and lower the original cover.
8. Press the Start key. (The machine will then start scanning the test pattern.)
9. Touch [OK] and repeat steps from 2 through 7 twice (a total of three times).

If the image is faulty, perform the troubleshooting procedures for image problems.

I. Scanner Area

- Use the following color chart for the adjustment of the scanner section.
- If the color chart is not available, a scale may be used instead.
- It will be displayed only when the following setting is set to “Level 2.”
  [Service Mode] → [Enhanced Security] → [Administrator Feature Level]
- It will not be displayed when the following setting shows that Management Device 1 is mounted during the device power is OFF or no authentication is set.
  [Service Mode] → [Billing Setting] → [Management Function Choice]
- This menu is unavailable when the key counter is not inserted while only the key counter is set to Set by [Service Mode] → [Billing Setting] → [Management Function Choice].

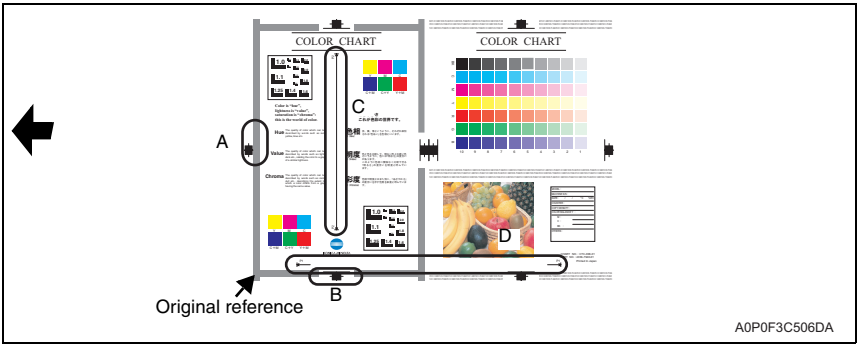

Adjustment item	Ref.
A: Scanner Adjustment: Leading Edge Adjustment	P.335
B: Scanner Adjustment: Centering	P.336
C: Horizontal Adjustment	P.337
D: Vertical Adjustment	P.338

(1) Scanner Adjustment: Leading Edge

<Use>

- To adjust variations in mounting accuracy and sensitivity of the scanner home sensor and in mounting accuracy of the original width scale by varying the scan start position in the main scan direction.
- When the original glass is replaced.
- When the original width scale is replaced.

<Procedure>

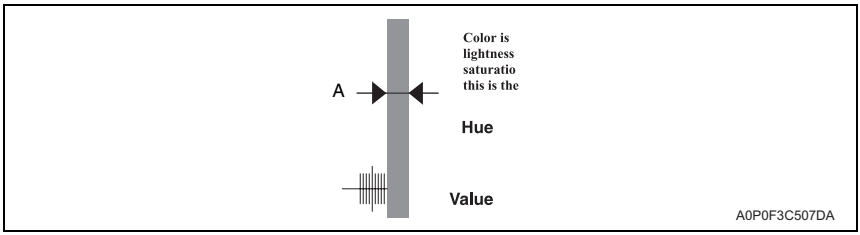

- A width on the color chart and one on the test print are measured and adjusted so that the difference of A width satisfies the specifications shown below.
- An adjustment must have been completed correctly of [Leading Edge Adjustment] of the Printer Adjustment.

Specifications
A: ± 0.5 mm

Setting range
-5.0 to +5.0 (in 0.1 mm increments)

1. Call the Administrator Settings to the screen.
2. Touch [System Settings] → [Expert Adjustment] → [Scanner Adjustment] → [Scanner Adjustment: Leading Edge].
3. Position the color chart correctly so that the original reference point is aligned with the scale.
4. Press the Start key to make a copy.
5. Check point A on the image of the test print.
6. If the image falls outside the specified range, change the setting using the [+] / [-] key.
   If the copy image is less than the specified length, increase the setting value.
   If the copy image exceeds the specified length, decrease the setting value.
7. Press the Start key to make another test print.
8. Check the image on the test print to see if the specifications are met.
9. Make adjustments until the specifications are met.

(2) Scanner Adjustment: Centering

<Use>

- To adjust part-to-part variations in accuracy of scanner parts and their mounting accuracy by varying the scan start position in the main scan direction.
- When the CCD unit is replaced.
- When the original glass is replaced.
- The scanner home sensor has been replaced.

<Procedure>

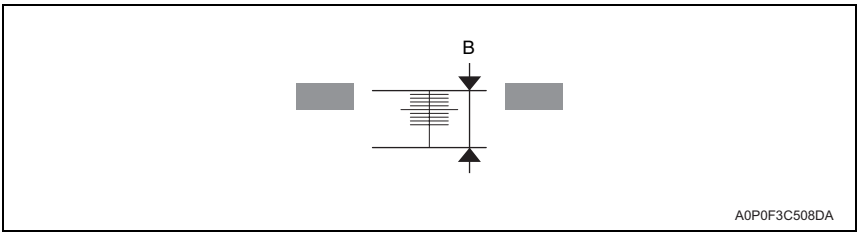

- B width on the color chart and one on the test print are measured and adjusted so that the difference of B width satisfies the specifications shown below.
- An adjustment must have been completed correctly of [Leading Edge Adjustment] of the Printer Adjustment.

Specifications
B: ± 1.0 mm

Setting range
-10.0 to +10.0 (in 0.1 mm increments)

1. Call the Administrator Setting to the screen.
2. Touch [System Settings] → [Expert Adjustment] → [Scanner Adjustment] → [Scanner Adjustment: Centering].
3. Position the color chart correctly so that the original reference point is aligned with the scale.
4. Press the Start key to make a copy.
5. Check point B on the image of the test print.
6. If the image falls outside the specified range, change the setting using the [+] / [-] key.
   If the copy image is less than the specified length, increase the setting value.
   If the copy image exceeds the specified length, decrease the setting value.
7. Press the Start key to make another test print.
8. Check point B of the image on the test print to see if the specifications are met.
9. Make adjustments until the specifications are met.

(3) Horizontal Adjustment

<Use>

- To adjust the zoom ratio in the main scan direction for the scanner section.
- The CCD unit has been replaced.

<Procedure>

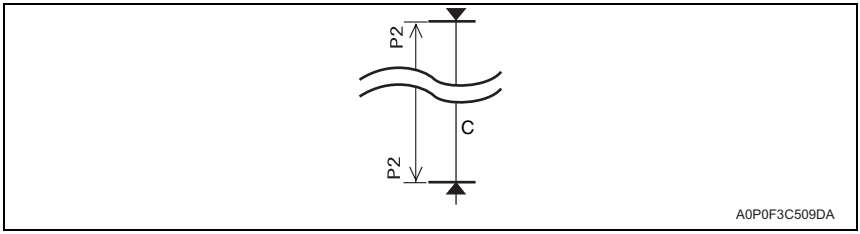

- Measure C width on the color chart and on the test print, and adjust the gap to be within the following specification.

Specifications
C: ± 1.0 mm

Setting range
0.990 to 1.010 (in 0.001 increments)

<Procedure>

1. Call the Administrator Settings to the screen.
2. Touch [System Settings] → [Expert Adjustment] → [Scanner Adjustment] → [Horizontal Adjustment].
3. Position the color chart correctly so that the original reference point is aligned with the scale.
4. Press the Start key to make a test print.
5. Check the C width on the image of the test print.
6. If the image falls outside the specified range, change the setting using the [+] / [-] key.
   If the C width on the copy sample is less than one on color chart, increase the setting.
   If the C width on the copy sample exceeds one on color chart, decrease the setting.
7. Press the Start key to make another test print.
8. Check the image on the test print to see if the specifications are met.
9. Make adjustments until the specifications are met.

(4) Vertical Adjustment

<Use>

- To adjust the zoom ratio in the sub scan direction for the scanner section
- The exposure unit has been replaced.
- The scanner motor has been replaced.
- The scanner drive cables have been replaced.

<Procedure>

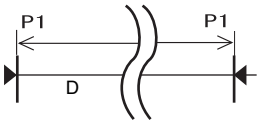

A0P0F3C510DA

- Measure D width on the color chart and on the test print, and adjust the gap to be within the following specification.

Specifications
D: ± 1.5 mm

Setting Range
0.990 to 1.010 (in 0.001 increments)

1. Call the Administrator Settings to the screen.
2. Touch [System Settings] → [Expert Adjustment] → [Scanner Adjustment] → [Vertical Adjustment].
3. Position the color chart correctly so that the original reference point is aligned with the scale.
4. Press the Start key to make a test print.
5. Check the D width on the image of the test print.
6. If the image falls outside the specified range, change the setting using the [+] / [-] key.
   If the D width on the copy sample is less than one on color chart, increase the setting.
   If the D width on the copy sample exceeds one on color chart, decrease the setting.
7. Press the Start key to make another test print.
8. Check the image on the test print to see if the specifications are met.
9. Make adjustments until the specifications are met.

J. ADF Adjustment

- It will be displayed only when the following setting is set to “Level 2.”
  [Service Mode] → [Enhanced Security] → [Administrator Feature Level]

(1) Centering

<Use>

- To adjust the read position in the Main Scanning Direction.
- When the result is Unable in the [Centering Auto Adjustment].
- When ADF has been replaced.

<Procedure>

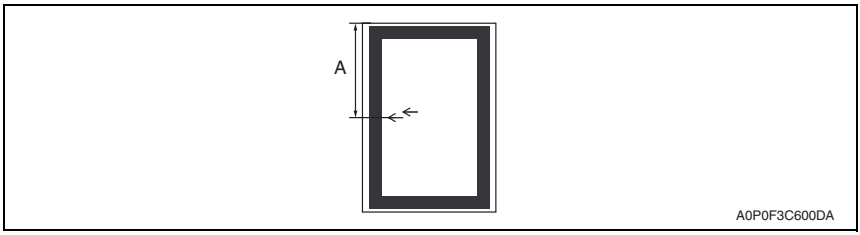

1. Place the chart in the document feed tray (with the side having an arrow facing up).
2. Make a full size copy of the chart.
3. Check that the difference in the widths of b between the chart and the copy sample falls within the specified range.

Specification b: 0 ± 2.0 mm
Adjustment range: -3.0 mm to +3.0 mm (1 step: 0.1 mm)

4. Call the Administrator Settings to the screen.
5. Touch [System Settings] → [Expert Adjustment] → [ADF Adjustment] → [Centering].
6. Look at the copy and make adjustment with the [+]/[-] key.
   If the difference in the widths of A is greater than the specifications, enter the [+] value.
   If the difference in the widths of A is smaller than the specifications, enter the [-] value.
7. Touch [OK].
8. Make a copy of the chart again and check that the difference in the widths of A falls within the specified range.

(2) Original Stop Position

<Use>

- To manually adjust the original stop position and the read position in each of the ADF modes.
- When the result is Unable in the [Auto Adj. of Stop Position].

<Procedure>

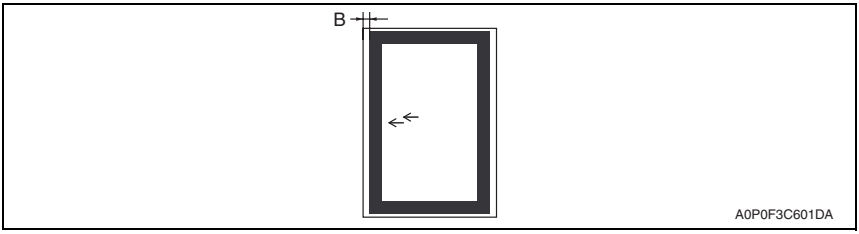

1. Place the chart in the document feed tray (with the side having an arrow facing up).
2. Make a full size copy of the chart.

NOTE

- **In the same way place the chart with the blank side facing up in the document feed tray in the duplex mode and make a copy. Check the difference in the widths of a between the chart and the second sided surface of the copy sample.**

3. Check that the difference in the widths of B between the chart and the copy sample falls within the specified range.

Specification B: 0 ± 2.0 mm
Adjustment range: -4.0 mm to +4.0 mm (1 step: 0.1 mm)

4. Call the Administrator Settings to the screen.
5. Touch [System Settings] → [Expert Adjustment] → [ADF Adjustment] → [Original Stop Position].
6. Look at the copy and adjust [Front] or [Back] with the [+]/[-] key.
   If the difference in the widths of B is greater than the specifications, enter the [+] value.
   If the difference in the widths of B is smaller than the specifications, enter the [-] value.
7. Touch [OK].
8. Make a copy of the chart again and check that the difference in the widths of B falls within the specified range.

(3) Centering Auto Adjustment

<Use>

- To automatically adjust the read position in the Main Scanning Direction.
- When ADF has been replaced.

<Procedure>

1. Call the Administrator Settings to the screen.
2. Touch [System Settings] → [Expert Adjustment] → [ADF Adjustment] → [Centering Auto Adjustment].
3. Place the chart in the document feed tray (with the side having an arrow facing up).
4. Press the Start key.
5. Make sure that result is OK. Then, touch [New].
6. Touch [Close].

NOTE

- **If the result is Unable:**
  Check and correct the skew of the document.
- **Manually correct the value of [Original Stop Position].**
  See P.340

(4) Auto Adj. of Stop Position

<Use>

- To automatically adjust the read position for the Sub Scanning Direction.
- To check skew feed.
- When ADF has been replaced.

<Procedure>

1. Call the Administrator Settings to the screen.
2. Touch [System Settings] → [Expert Adjustment] → [ADF Adjustment] → [Auto Adj. of Stop Position].
3. Touch [Front] or [Back].
4. Place the chart in the document feed tray.
   [Front]: Set the chart with its arrow side facing upward.
   [Back]: Set the chart with its blank side facing upward.
5. Press the Start key.
6. Make sure that result is OK. Then, touch [New].
7. Touch [Close].

NOTE

- **If the result is Unable:**
  Check and correct the skew of the document.
- **Manually correct the value of [Original Stop Position].**
  See P.340

K. Line Detection

(1) Prior Detection Setting

<Use>

- To set whether or not to perform pre-detection of stain on the ADF original glass.
- To set the detection level of the pre-detection of stain on the ADF original glass.
- To set how to display the warning when stain on the ADF original glass is detected.
- Use when changing the display of the warning which requests the cleaning of the stain on the glass detected by the pre-detection of the lines.
  TYPE1 : Warning will be displayed by the maintenance mark. (warning code: D-1/D-2)
  TYPE2 : Warning will be displayed on the message area on the basic screen.
  TYPE3 : Warning will be displayed on all screens.
  OFF : Warning will not be displayed.

- Use when changing the detection level for the pre-detection of stain on the original glass.
  Low : Stain on the glass will not be detected easily.
  Normal : Normal detection level
  High : Stain on the glass will easily be detected.

<Procedure>

- The default setting is Yes.

"Yes" No

NOTE

- **[Warning Level] and [Detection Level] can be set when "Yes" is selected.**
- **Be aware that selecting "No" and performing the pre-detection with the following setting will display "NG."**
  [Service Mode] → [Machine] → [Split Line Prior Detection]
- **When "No" is selected, the original glass cleaning operation after the job ends does not operate.**

<Warning Level>

- The default setting is TYPE2.

TYPE1 "TYPE2" TYPE3 OFF

<Detection Level>

- The default setting is Std.

Low "Std." High

(2) Feed Cleaning Settings

<Use>

- To set the operation for detection and removing operation of stain on the ADF original glass when feeding the original.
- Use when changing the operation for detection and removing operation of stain on the ADF original glass when feeding the original.
  Do not remove : The glass will stop moving when the original is fed, and will not perform removing the stain.
  Remove : The glass will move between originals when feeding the original.

<Procedure>

- The default setting is Remove.

Do not remove "Remove"

L. Trail Edge Adjust

(1) Use

- To adjust trail edge if there is any when comparing the original with copy of the plain or thick paper.
- To correct any color shift at trail edge.
- Able to make a setting on a process speed basis independently for each paper type of plain paper (color), thick 1/1+, and thick 2/3/4.

(2) Procedure

1. Call the Administrator Settings to the screen.
2. Touch [System Settings] → [Expert Adjustment] → [Color Registration Adjust].
3. Load manual bypass tray with A3/11 x 17 or A4/8 $^{1}/_{2}$ x 11 normal paper.
4. Select a paper type that is set on the manual bypass tray.
5. Press the Start key.
6. On the test pattern produced, check for deviation between the black line and the line of each color at positions X and Y.
7. Using the [+] / [-] key, change the setting value as necessary.
   If the cross deviates in the direction of A, increase the setting.
   If the cross deviates in the direction of B, decrease the setting.
8. Produce another test pattern and make sure that there is no deviation.

Check Procedure

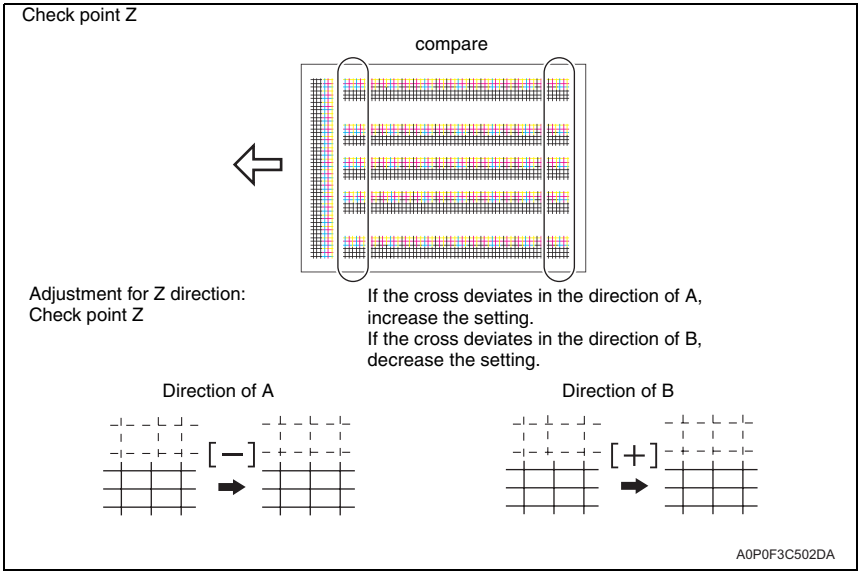

M. User Paper Settings

- It will be displayed only when the following setting is set to “Level 2.”
  [Service Mode] → [Enhanced Security] → [Administrator Feature Level]

(1) Use

- To set and register individual user paper that includes different basic weight and transfer output fine adjustment data.
- To register a paper type that is suitable for customer’s intended use and use environment.
- The feature available from [Service Mode] → [System 2] → [User Paper Settings] is extended to Administrator. However, the fusing temperature setting is not possible in Administrator Settings.
- The user paper registration keys and corresponding paper types are as follows:
  User Paper 1, 2: Plain paper
  User Paper 3 : Thick 1
  User Paper 4 : Thick 1+
  User Paper 5 : Thick 2
  User Paper 6 : Thick 3

(2) Procedure

1. Call the Administrator Settings to the screen.
2. Touch [System Settings] → [Expert Adjustment] → [Forward] → [User Paper Settings].
3. Select the desired key from [User Paper 1] to [User Paper 6] to register user paper.
4. Select [Basic Weight] and enter a value with the [+]/ [-] key.
5. Select one from the following; [Media Front - Color], [Media Front - Black], [Media Back-Color], or [Media Back - Black]. Enter a 2nd transfer output value with the [+]/[-] key.
   Setting range: -7 to +8 (1 step: 1 increment or decrement)
6. Load the tray with A4S or 8 $^{1}/_{2}$ x 11S paper.
7. Touch [Test Pattern Output]. Specify a paper feed tray and select either 1st side or 2nd side.
8. Press the Start key and check the image of the output test pattern. If the image is not acceptable, adjust the settings, output and check a test pattern again.

(3) Test pattern in user paper settings

- The printable test pattern for user paper settings is provided to ease determining the most appropriate 2nd transfer output value used when customizing user paper.
- This test pattern changes output voltage as shown below based on the standard voltage A (voltage determined by the 2nd image transfer auto transfer voltage control) on a sheet of paper.

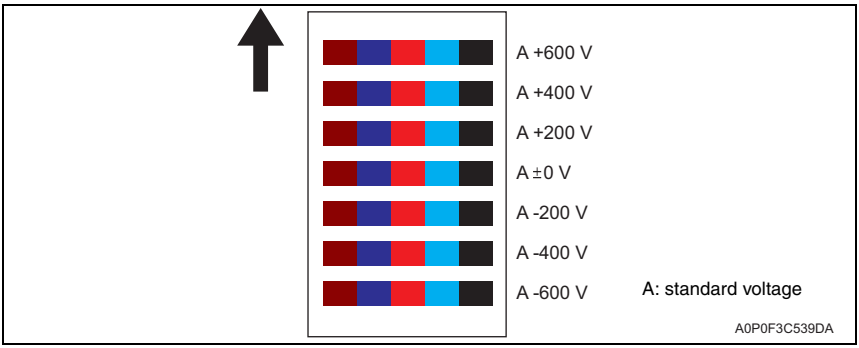

N. Erase Adjustment

(1) Non-Image Area Erase Operation Settings

<Use>

- Configure Non-Image Area operation settings.
  - Auto : Automatically detects the background density of the original, and selects either [Bevel] or [Rectangular] accordingly.
  - Specify : Allows you to manually specify an erase method and original density. As an erase method, select [Bevel] or [Rectangular]. Specify an original density from five levels.

<Procedure>

- The default setting is Auto.

"Auto" Specify

10.6.8 System Settings-List/Counter

A. Management List

- It will not be displayed when the following setting shows that vendor is mounted.
  [Service Mode] → [Billing Setting] → [Management Function Choice]
  (It will be displayed when the Key counter is mounted or when the following setting shows that switch No.33 is set to [01] at HEX assignment.
  [Service Mode] → [System 2] → [Software Switch Setting])

(1) Job Settings List

<Use>

- To output the value set by the setting menu.

<Procedure>

1. Touch [Job Settings List].
2. Select the feed tray.
3. Select simplex or duplex print, and touch the Start key.

B. Paper Size/Type Counter

<Use>

- To register the combination of the specific paper size and the paper type, and to set the count.

<Procedure>

1. Press a key out of 1 to 10 registration keys.
2. Select the paper type.
3. Touch the paper size key to select the paper size.

C. Meter Counter List

- Setting will be available only when the following setting shows that either authentication device, management device 2, vendor 2 is mounted.
  [Service Mode] → [Billing Setting] → [Management Function Choice]

<Use>

- To output the meter counter list.
- To print out the list in this setting because counter list cannot be printed when the following setting shows that vendor is mounted.
  [Meter Counter] → [Details]

<Procedure>

1. Touch [Meter Counter List].
2. Select the Feed tray.
3. Select Simplex or Duplex print, and touch the Start key.

D. Check Consumables List

- Setting will be available only when the following setting shows that either authentication device, management device 2, vendor 2 is mounted.
  [Service Mode] → [Billing Setting] → [Management Function Choice]

<Use>

- To output the consumable life list.
- To print out the list in this setting because the list cannot be printed when the following setting shows that Vendor is mounted.
  [Utility] → [Check Consumable Life]

<Procedure>

1. Touch [Consumable Life List].
2. Select the feed tray.
3. Select Simplex or Duplex print, and touch the Start key.

10.6.9 System Settings-Reset Settings

A. System Auto Reset

(1) Use

- To set the period of time until system auto reset starts functioning.

(2) Procedure

<Priority Mode>

- To set the functions displayed during system auto reset from Copy and Scan/Fax.
- The default setting is Copy.

"Copy" Scan/Fax

<System Auto Reset Time>

- The default setting is 1 min.

"1 min." (1 to 9, OFF)

B. Auto Reset

(1) Use

- To set the period of time until auto reset starts functioning in “Copy” and “Scan/Fax.”

(2) Procedure

- The default setting is 1 min.

“1 min.” (1 to 9, No)

C. Job Reset

(1) When Account is changed

- It will not be displayed when the following setting shows that authentication device is mounted.
  [Service Mode] → [Billing Setting] → [Management Function Choice]
  (It will be displayed when the key counter is mounted.)

<Use>

- Selects whether to reset (initialize) a machine when the key counter is unplugged, a magnetic card is pulled out, or user authentication/account track is set.
- To select not to reset to the default settings even when the accounts are changed through the use of a data management device.

<Procedure>

- The default setting is Reset.

“Reset” Do Not Reset

(2) When Original is set on ADF

<Use>

- Select whether to reset the function when originals are placed on the ADF.

<Procedure>

- The default setting is Do Not Reset.

Reset “Do Not Reset”

(3) Next Job: Staple Setting

<Use>

- To set whether to cancel the staple setting when the staple setting job started and the next job setting has become available.

<Procedure>

- The default setting is OFF.

ON “OFF”

(4) Next Job: Original Set/Bind Direction

<Use>

- To set whether to cancel the original set/bind direction when the job (which original set/bind direction is set) started and the next job setting has become available.

<Procedure>

- The default setting is OFF.

ON “OFF”

(5) Next Job: Reset Data After Job

<Use>

- To set whether to cancel the setting for scanning or transmitting fax when the scanning is finished or fax is transmitted, making the next job setting available.
  (The address will be cleared even when [OFF] is selected.)

<Procedure>

- The default setting is ON.

"ON" OFF

10.6.10 System Settings-User Box Settings

A. Delete Unused User Box

(1) Use

- To delete the unnecessary box without data.

(2) Procedure

1. Touch [Delete Unused User Box].
2. Touch [Yes] on the Check screen.

B. Delete Secure Print Documents

(1) Use

- To delete the whole classified documents in the box.

(2) Procedure

1. Touch [Delete Secure Documents].
2. Touch [Yes] on the Check screen.

C. Auto Delete Secure Document

(1) Use

- To set whether or not to delete the confidential documents in the box after a certain period of time. It also sets the period of time to store data.

(2) Procedure

- The default setting is 1 Day.

12 Hours "1 Day" 2 Days 3 Days 7 Days 30 Days Save

D. Encrypted PDF Delete Time

(1) Use

- Specifies whether to delete encrypted PDF data stored in the box after a lapse of a predetermined period of time.
  Sets the time period for which encrypted PDF data can be stored.

(2) Procedure

- The default setting is 1 Day.

12 Hours "1 Day" 2 Days 3 Days 7 Days 30 Days Save

E. ID & Print Delete Time

(1) Use

- Specifies whether to delete ID & print data stored in the box after a lapse of a predetermined period of time.
  Sets the time period for which ID & print data can be stored

(2) Procedure

- The default setting is 1 Day.

12 Hours "1 Day" 2 Days 3 Days 7 Days 30 Days Save

F. Document Hold Setting

(1) Use

- Selects whether to store the document again in the box after it was retrieved from the box.
- If the function is set to No, the document is automatically deleted after it was retrieved.

(2) Procedure

- The default setting is OFF.

ON "OFF"

G. External Memory Function Settings

(1) Use

- This operation enables or disables functions using an external memory connected to this machine.
- Capability to enable [Save Document] and [Print Document] separately.

Save Document : a function that saves scanned documents into the external memory using [Save Document] in the box mode.
Print Document : a function that prints and sends documents saved in the external memory using [Use Document] in the box mode.

(2) Procedure

<Save Document>

- The default setting is OFF.

ON "OFF"

<Print Document>

- The default setting is ON.

"ON" OFF

H. Allow/Restrict User Box

(1) Use

- Specify whether to release functions so that the user can create, edit, or delete a User Box.

(2) Procedure

- The default setting is Allow.

"Allow" Prohibit

I. ID & Print Delete after Print Setting

(1) Use

- Select whether to check that the document saved in the ID & Print User Box has been deleted after printed.

(2) Procedure

- The default setting is Confirm with User.

"Confirm with User" Always Delete

J. Document Delete Time Setting

(1) Use

- This function enables the administrator to specify the time to delete a document from a User Box when you cannot specify the document deletion time. When automatically specifying the document deletion time, select [Yes] and set the deletion time.

(2) Procedure

- The default setting is 1 Day.

12 Hours "1 Day" 2 Days 3 Days 7 Days 30 Days Save

10.6.11 System Settings-Standard Size Setting

- It will be displayed only when the following setting is set to "Level 2."
  [Service Mode] → [Enhanced Security] → [Administrator Feature Level]

A. Original Glass Original Size Detect

(1) Use

- To change the document size detection table.

(2) Procedure

- The default setting is Table1.

"Table1" Table2

B. Foolscap Size Setting

(1) Use

- To set the size for foolscap paper.
- Upon setup.

(2) Procedure

- Select the size from among the following five.

220 x 330 mm $8^{1}/_{2}$ x 13 $8^{1}/_{4}$ x 13 $8^{1}/_{8}$ x $13^{1}/_{4}$ "8 x 13"

10.6.12 System Settings-Stamp Settings

A. Header/Footer Settings

(1) Use

- Saves or deletes header/footer settings.
- Able to obtain registered header/footer data by [Application] → [Stamp/Composition]

(2) Procedure

- Touch [New] to register new headers and footers.

B. Fax TX Settings

(1) Use

- Specifies whether to reset a stamp setting when fax is sent.

(2) Procedure

- The default setting is Cancel.

"Cancel"	Do Not Cancel

10.6.13 System Settings-Blank Page Print Settings

A. Use

- Specifies whether to print a stamp/page number on blank pages.

B. Procedure

- The default setting is Print.

"Print"	Do Not Print

10.6.14 System Settings-Application Key Settings

- This is displayed only when the optional i-Option (LK-101 or LK-103) is activated.

A. Use

- To assign the additional functions provided by i-Option to the application keys.
- This settings allow free application key assignment to additional functions provided by i-Option as well as to "User Box", "Fax/Scan" and "Copy" to which the application keys were conventionally assigned. (However, Key 0 is assigned to the function of displaying the application menu so that other functions cannot be assigned to Key 0.)
- The functions that can be assigned are as follows:
  Copy, Fax/Scan, User Box, Image Panel, Web Browser, My Panel

B. Procedure

1. Select [Key 1] or [Key 2].
2. Select a function to which the key is assigned, and touch [OK].

10.6.15 System Settings-Skip Job Operation Settings

A. Use

- Configure whether to start processing for the next job when the current job stops due to running out of paper in the paper tray.

B. Procedure

1. Touch [Skip Job Operation Settings].
2. Make settings and touch [OK].

10.6.16 System Settings-Default Bypass Paper Type Setting

A. Use

- Configure the initial settings for the paper type to be used for the bypass tray.

B. Procedure

1. Touch [Default Bypass Paper Type Setting].
2. Select the desired paper type and touch [OK].

10.6.17 System Settings-Page Number Print Position

A. Use

- Specify a page number print position when printing page numbers after configuring 2-sided print or booklet settings. Select whether to print the page numbers on a same position on all pages or on positions symmetric with respect to the stapling position.

B. Procedure

1. Touch [Page Number Print Position].
2. Check test print and fine adjust the position.

10.6.18 System Settings-Advanced Preview Setting

- It will be displayed in bizhub C652/C552 machines where the function version is version 2 or later and in all bizhub C452 machines.

A. Original direction setting display

(1) Use

- To set whether to display the screen where the original set direction can be selected after touching [Preview] when printing with the advanced preview function.

(2) Procedure

- The default setting is ON.

"ON"	OFF

10.6.19 Administrator/Machine Settings-Administrator Registration

A. Use

- Registers administrator information displayed Help service/Administrator information screen as well as sender addresses used for E-mail transmission from the machine.

B. Procedure

1. Touch [Administrator Name], [E-mail Address] to input them.
2. Using the 10-key pad, enter the extension No.

10.6.20 Administrator/Machine Settings-Input Machine Address

A. Use

- To register the name of the machine and e-mail address.
  Machine Name : When the file name of the transmitted file or the document name of document registered in Box is generated automatically, it is added.
  E-mail : To be used as from address at internal Fax transmission.

B. Procedure

1. Touch [Device Name] and input the name.
2. Touch [E-mail Address] and input the E-mail address.

10.6.21 One-Touch/User Box Registration-Create One-Touch Destination

A. Address Book

(1) E-mail

<Use>

- To register/change the e-mail address for transmitting the scanned data by e-mail.

<Procedure>

- Touch [New] to register the new address.
- Select any displayed address to check, edit, or delete the setting.

(2) User Box

- It will not be displayed when the following setting shows that authentication device or the vendor is mounted.
  [Service Mode] → [Billing Setting] → [Management Function Choice]

<Use>

- To register or change the box address for storing the scanned data to the box in the hard disk of the machine.

<Procedure>

- Touch [New] to register the new address.
- Select any displayed address to check, edit, or delete the setting.
- At least one user box must be registered in order to register the box address.

(3) Fax

<Use>

- To register or change the fax number for transmitting the fax.

<Procedure>

- Touch [New] to register the new address.
- Select any displayed address to check, edit, or delete the setting.

(4) PC (SMB)

<Use>

- To register or change the SMB address for transmitting the scanned data by SMB.

<Procedure>

- Touch [New] to register the new address.
- Select any displayed address to check, edit, or delete the setting.

(5) FTP

<Use>

- To register and change the FTP address for transmitting the scanned data by FTP.

<Procedure>

- Touch [New] to register the new address.
- Select any displayed address to check, edit, or delete the setting.

(6) WebDAV

<Use>

- To register and change the WebDAV address for transmitting the scanned data by FTP.

<Procedure>

- Touch [New] to register the new address.
- Select any displayed address to check, edit, or delete the setting.

(7) IP Address Fax

<Use>

- To register/change the IP address fax destination when transmitting the IP address fax data.

<Procedure>

- A new address can be registered by touching [New].
- Select any displayed address to check, change or delete the setting.

(8) Internet Fax

<Use>

- To register/change the Internet fax address when transmitting the internet fax data.

<Procedure>

- A new address can be registered by touching [New].
- Select any displayed address to check, change or delete the setting.

B. Group

(1) Use

- To register or change the group with a number of addresses to transmit data simultaneously.

(2) Procedure

- Touch [New] to register the new group.
- Select any displayed group to check, edit, or delete the setting.
- At least one address must be registered in order to register the group.

C. E-mail Settings

(1) E-mail Subject

<Use>

- To register the e-mail subject for transmitting the scanned data by e-mail.

<Procedure>

- Touch [New] to register the new subject.
- Select any displayed subject to detail check, edit, or delete the setting.
- The subject can be set as default by selecting the subject displayed on the screen and pressing [Set as Default].

(2) E-mail Body

<Use>

- To register the e-mail message for transmitting the scanned data by e-mail.

<Procedure>

- Touch [New] to register the new message.
- Select any displayed message to detail check or delete the setting.
- The text can be set as default by selecting the text displayed on the screen and pressing [Set as Default].

10.6.22 One-Touch/User Box Registration-Create User Box

- It will not be displayed when the following setting shows that authentication device 1 is mounted.
  [Service Mode] → [Billing Setting] → [Management Function Choice]

A. Public/Personal User Box

(1) Use

- To register or change the box for storing the text data in the hard disk of the machine.

(2) Procedure

- Touch [New] to register the new box.
- Select any displayed box to edit or delete it.

B. Bulletin Board User Box

(1) Use

- To register or change the bulletin board user box.

(2) Procedure

- Touch [New] to register the new box.
- Select any displayed box to edit or delete it.

C. Relay User Box

- It will be displayed when the optional fax kit FK-502 is installed.

(1) Use

- To register/change the Relay User Box.

(2) Procedure

- A new box can be registered by touching [New].
- Select any displayed box to change or delete it.

D. Annotation User Box

(1) Use

- To register or change the annotation user box.
- To attach the image of the date, time, and/or filing number to the document data stored in the scanner mode, and to distribute them.

(2) Procedure

- Touch [New] key to register the new box.
- Select any displayed box to change or delete it.

10.6.23 One-Touch/User Box Registration-One-Touch/User Box Registration List

A. Address Book List

(1) Use

- To output the address book list.

(2) Procedure

1. Select the destination type to be output.
2. Touch [Starting destination No.] and enter the number from which output starts.
3. Touch [No. of Destinations] and specify the number of destinations to be output.
4. Touch [Print], and select the paper feed tray.
5. Select the simplex or duplex print, and press the Start key to output the list of abbreviated addresses.

B. Group List

(1) Use

- To output the group list.

(2) Procedure

1. Touch [Starting destination No.] and enter the number from which output starts.
2. Touch [No. of Destinations] and specify the number of destinations to be output.
3. Touch [Print], and select the paper feed tray.
4. Select the simplex or duplex print, and press the Start key to output the list of abbreviated addresses.

C. Program List

(1) Use

- To output the program list.

(2) Procedure

1. Select the destination type to be output.
2. Touch [Starting destination No.] and enter the number from which output starts.
3. Touch [No. of Destinations] and specify the number of destinations to be output.
4. Touch [Print], and select the paper feed tray.
5. Select the simplex or duplex print, and press the Start key to output the list of abbreviated addresses.

D. E-mail Subject/Text List

(1) Use

- To output the subject or the text list.

(2) Procedure

1. Select the paper feed tray.
2. Select the simplex or duplex print, and press the Start key to output the list of abbreviated addresses.

10.6.24 One-Touch/User Box Registration-Maximum Number of User Boxes

A. Use

- Set the maximum of public, personal, and group boxes that individual users can hold.

B. Procedure

1. Select a user box type and name.
2. If a maximum number of user boxes is not specified, set Max. No. of Use Boxes to [OFF].
3. If a maximum number of user boxes is not specified, set Max. No. of Use Boxes to [OFF].

10.6.25 User Authentication/Account Track-General Settings

- It will not be displayed when the following setting shows that key counter or vendor is mounted.
  [Service Mode] → [Billing Setting] → [Management Function Choice]

A. User Authentication

(1) Use

- To set the user authentication method.
- To select whether to authenticate the user by the external server or MFP.

(2) Procedure

- The default setting is OFF.

"OFF" ON (External Server) ON (MFP)

NOTE

- **[OFF] cannot be selected when the following setting is set to "ON."**
  [Administrator Settings] → [Security Setting] → [Enhanced Security Mode]
- **[ON (External Server)] cannot be selected when external servers are not registered in the following setting.**
  [Administrator Settings] → [User Authentication/Account Track] → [External Server Settings]
- **Neither [ON (External Server)] or [ON (MFP)] can be selected when the presence of management device is set in the following setting.**
  [Service Mode] → [Billing Setting] → [Management Function Choice]

B. Public User Access

(1) Use

- To set whether to allow or prohibit the nonregistered user to use the system when User authentication has been set.
- Able to use the machine without authentication by logging in as a public user when [ON (Without Login)] is selected.

(2) Procedure

- The default setting is Restrict.

"Restrict"	ON (With Login)	ON (Without Login)

NOTE

- **This setting is not available without user authentication.**
- **[Allow] cannot be selected when the following setting is set to "ON." [Administrator Settings] → [Security Setting] → [Enhanced Security Mode]**
- **[Allow] cannot be selected when [Synchronize User Authentication & Account Track] is set to "Do Not Synchronize."**

C. Account Track

(1) Use

- To set whether to enable the account track function or not.

(2) Procedure

- The default setting is OFF.

"OFF"	ON

D. Account Track Input Method

(1) Use

- To set the authentication method for the account track.
- To select whether to authenticate by password or by account name & password.

(2) Procedure

- The default setting is Account Name & Password.

"Account Name & Password"	Password Only

NOTE

- **This setting is not available without the account track.**
- **"Password Only" cannot be set when using both user authentication and account track.**

E. Synchronize User Authentication & Account Track

(1) Use

- To set whether to synchronize the user authentication and account track.

(2) Procedure

- The default setting is Synchronize.

"Synchronize"	Do not synchronize

NOTE

- **The setting is available only when carrying out the user authentication and account track.**

F. When # of Jobs Reach Maximum

(1) Use

- To set whether to stop the currently printing job and start the next job, or to stop the machine, when reaching to the upper limit for the number of printed pages set by the user authentication and the account track.
- To stop the machine when the number of printed pages reach the upper limit set by the user authentication and the account track.

(2) Procedure

- The default setting is Skip Job.

"Skip Job" Stop Job

G. Number of User Counters Assigned

- It will not be displayed when the following setting shows that management device 2 is mounted.
  [Service Mode] → [Billing Setting] → [Management Function Choice]

(1) Use

- To set the number available to be assigned for the user registration and account registration.

(2) Procedure

- The default setting is 500.
- The total number to be registered for the user authentication and account track is 1000. The number for the user registration will be set.

* When setting the [# of Counters Assigned for Users] to 50, the number available for Account Track will be 950.

NOTE

- **The setting is available only when carrying out the user authentication and account track.**

H. Ticket Hold Time Setting

(1) Use

- Specify the desired length of holding time of Kerberos authentication ticket.

NOTE

- **This setting takes effect only when the authentication server type is set to active directory.**

(2) Procedure

- The default settings is 60 min.

1 to "60 min."

I. Scanner Settings

- It will be displayed only when the optional image controller IC-412 is mounted and user authentication or account track has been set.

(1) Use

- To select whether to use TWAIN scan function available in Fiery Remote Scan when user authentication or account track is set to on.
- When user authentication or account track is set to on, select the use of TWAIN scan function available in Fiery Remote Scan software that is supplied with the image controller.

(2) Procedure

- The default settings are Restrict.

Allow "Restrict"

10.6.26 User Authentication/Account Track-User Authentication Setting

- The settings are available only when carrying out the user authentication.

A. Administrative Setting

(1) User Name List

- It cannot select [OFF] when the following setting is set to "ON."
  [Administrator Settings] → [Security Settings] → [Enhanced Security Mode]

<Use>

- To set whether to display or not the list key for user names on user authentication screen.

<Procedure>

- The default setting is OFF.

ON "OFF"

- **[ON] cannot be selected when [ON] is specified in the following setting. [Administrator Settings] → [Security Settings] → [Enhanced Security Mode]**

(2) Default Function Permission

<Use>

- To set the default value for the function permission in user authentication by the external server.
- To set the function which authenticated user can use when initially authenticating the user by the external server.
- Items available for setting: Copy, Scan, Fax, Print, User Box, Print Scan/Fax TX, Save to External Memory, Read the stored document in External Memory, Manual destination input, Cellular Phone/PDA and Web browser

<Procedure>

- The default setting is Allow.

"Allow" Restrict

(3) ID & Print Settings

<Use>

- To set whether to use ID & Print (a job sent by a user cannot be printed until the user authentication is completed).
- To set whether to print a job of unauthenticated or public user or to save the job into the ID & Print User Box.

<Procedure>

<ID & Print>

- The default setting is OFF.

ON "OFF"

<Public User>

- The default setting is Print Immediately.

"Print Immediately" Save

(4) ID & Print Operation Settings

- It will be displayed only when the following setting shows that authentication device is set to "installed".
  [Service Mode] → [Billing Setting] → [Management Function Choice]

<Use>

- To set whether to print all jobs or only one job from the same authenticated user when ID & Print is selected.

<Procedure>

- The default setting is Print All Jobs.

"Print All Jobs" Print Each Job

B. User Registration

(1) Use

- To register, change or delete the user for authentication.

(2) Procedure

1. Select the user, and touch [Edit]
2. Input the user name, user password, and e-mail address.

NOTE

- **It cannot be entered when conducting authentication by external server.**

3. Set the output permission, max allowance set, function permission, and touch [OK].

NOTE

- **When the public users are allowed, the output permission and the function permission can be set.**
- **[Authentication Information Registration] does not appear when the presence of Authentication Device 2 is set in the following setting.**
  [Service Mode] → [Billing Setting] → [Management Function Choice]
- **[Output Permission], [Max. Allowance Set], and [Function Permission] do not appear when the presence of Management Device 1 is set in the following setting.**
  [Service Mode] → [Billing Setting] → [Management Function Choice]

C. User Counter

(1) Use

- To display the status of use of the copy+print, copy, print and scan/fax for each user.

(2) Procedure

1. Select the user and touch [Counter Details].
2. Select the key to check to see the status of use.
3. For clearing the counter, touch [Clear Counter].
4. For clearing the all counters, touch [Reset All Counters].

10.6.27 User Authentication/Account Track-Account Track Setting

- The settings are available only when carrying out the account track.

A. Account Track Registration

(1) Use

- To register and change the account.

(2) Procedure

1. Select the proper Account and touch [Edit].
2. Input the [Account Name], [Password] and [Name].
3. Set the [Output Permission], and [Max. Allowance Set], and touch [OK].

NOTE

- **When the "Password Only" is selected for [Account Track Input Method], [Account Name] does not appear.**
- **When the "Password Only" is selected for [Account Track Input Method], [Account Name] does not appear.**

B. Account Track Counter

(1) Use

- To display the status of use of the copy+print, copy, print and scan/fax for each account.

(2) Procedure

1. Select the account and touch [Counter Details].
2. Select the key for the item to be checked.
3. For clearing the counter, touch [Clear Counter].
4. For clearing the all counters, touch [Reset All Counters].

10.6.28 User Authentication/Account Track-Print without Authentication

- It cannot select [Allow] when the following setting is set to "ON."
  [Administrator Settings] → [Security Settings] → [Enhanced Security Mode]

A. Use

- To set whether to allow or restrict the print which user and account are not specified.
- To allow or restrict printing which user and account are not specified.
- When Allow is selected, pages printed by unidentified users are counted and included in the count of the public user.

B. Procedure

- The default setting is Restrict.

Allow "Restrict"

10.6.29 User Authentication/Account Track-Print Counter List

- The setting is available only when carrying out the user authentication or account track.
- It will not be displayed when the following setting shows that key counter, vendor, authentication device1 or management device 2 is mounted.
  [Service Mode] → [Billing Setting] → [Management Function Choice]

A. Use

- To print out the User counter and the account counter.

B. Procedure

1. Touch [Counter List].
2. Select the simplex or duplex print, and press the start key to output the counter list.

10.6.30 User Authentication/Account Track-External Server Settings

A. Use

- Registers and sets an external server that is used for user authentication.

B. Procedure

1. Select one from No. 1 to No. 20 and touch [NEW].
2. Set [Server Name] and [Server Type].
3. To change settings, select an external server to be edited and touch [Edit].

<Server Type>

Active Directory NTLM v1 NTLM v2 NDS LDAP

NOTE

- **Neither [NTLM v1] nor [NTLM v2] appear when OFF is selected in the following setting.**
  [Administrator Settings] → [Network Settings] → [SMB Settings] → [User Authentication (NTLM)]
- **[NDS] does not appear when OFF is selected in the following setting.**
  [Administrator Settings] → [Network Settings] → [NetWare Settings] → [User Authentication Setting (NDS)]

10.6.31 User Authentication/Account Track-Limiting Access to Destinations

A. Create Group

(1) Use

- Registers and edits groups of destinations for limiting access.

(2) Procedure

1. Select a group and touch [Edit].
2. Enter [Group Name].
3. Set the Access Allowed Level and touch [OK].

B. Apply Levels/Groups to Destinations

(1) Use

- Sets Apply Level and Apply Group for individual destinations.

(2) Procedure

1. Select one from Address Book, Group, and Program.
2. Select a registered address. Touch [Apply Group] and [Apply Level] independently to make each settings.

C. Apply Levels/Groups to Users

(1) Use

- Sets Apply Level or Apply Group for individual users.

(2) Procedure

1. Select a registered user. Touch [Apply Group] and [Apply Level] independently to make each settings.

10.6.32 User Authentication/Account Track-Authentication Device Settings

- The function can be displayed only when the authentication device 2 is set to Set by [Service Mode] → [Billing Setting] → [Management Function Choice]

A. General Settings

(1) Use

- Specifies a device used for user authentication.
  Card Authentication : Select the IC card type and operation settings.
  Bio Authentication : Select the beep and operation settings.

(2) Procedure

Card Authentication Bio Authentication

- Select either one of the authentication devices and press the corresponding key to go to the individual operation setting screen.

- The screen displays the authentication device that is selected in [Service Mode] → [Billing Setting] → [Management Function Choice] → [Authentication Device 2].
  When [Card 1] is selected as the authentication device, select the card type from among [FeliCa], [TypeA], [SSFC], [FCF], and [FCF (Campus)] and make the operation settings.
  When [Card 2] is selected as authentication device, the authentication device name will be displayed differently depending on the type of installed loadable device driver.
- If SSFC (Shared Security Formats Cooperation) is selected in Card Authentication, set [Company Code], [Company Identification Code], [Area No.], [Building No.], [Floor No.], [Room No.], and [Security Level].
- If LEGIC (PID) is selected in Card Authentication, perform the access setting (STAMP input) for LEGIC (PID).
- If MIFARE (PID) is selected in Card Authentication, perform the MIFARE key setting.

B. Logoff Settings

(1) Use

- Select whether or not the user is logged off after a scan or fax is sent or after the copy document is scanned.

(2) Procedure

- The default setting is Do not log off.

"Do not log off"	Log off

10.6.33 User Authentication/Account Track-Auth/Acct Track Common Setting

A. Logout Confirmation Screen Display Setting

(1) Use

- Select whether or not to display the logout confirmation screen.
- If the setting is made not to display the confirmation screen, the logout sequence is performed only through the Access key operation with no confirmation screen appearing.

(2) Procedure

- The default setting is ON.

"ON"	OFF

B. Single Color > 2 Color Output Management

(1) Use

- Configure whether to manage the output of single color or 2 color as color print or black print.
  When managing it as black print, even a user who is restricted from performing color print can perform single color or 2 color output.

(2) Procedure

- The default setting is Color.

"Color"	Black

10.6.34 User Authentication/Account Track-Scan to Home Settings

(1) Use

- To set whether or not to enable the Scan to Home function that is used to send scanned data to user's home folder.

(2) Procedure

- The default setting is Disable.

Enable	"Disable"

10.6.35 User Authentication/Account Track-Scan to Authorized Folder Settings

A. Use

- Use to restrict specification of sending destinations by users.
- Enabling this item disables manual entry of destinations except for recipients of faxes or IP address faxes. Therefore users can specify sending destinations only by accessing the address book. Enabling this item also applies the following restrictions.
  - Users cannot save documents to User Boxes
  - Users cannot transmit documents from User Boxes
  - Users cannot use annotation User Boxes
  - Users cannot use the image panel
  - Users cannot select addresses from the transmission history
  - Users cannot use the URL notification function

B. Procedure

- The default setting is Do Not Limit.

Limit “Do Not Limit”

10.6.36 Network Settings-TCP/IP Settings

A. TCP/IP Settings

(1) Use

- To set whether to enable or disable TCP/IP settings.

(2) Procedure

- The default setting is ON.

“ON” OFF

NOTE

- **When the setting is changed, turn off the main power switch and turn it on again more than 10 seconds after.**

B. IPv4 Settings

(1) Use

- To set whether to enter the IP address (IPv4) directly or to obtain it automatically.

(2) Procedure

- The default setting is Auto Input.

Manual Input “Auto Input”

- When it is set to [Auto Input], select the method to obtain it automatically.

DHCP Setting	:	ON	OFF
BOOTP Setting	:	ON	OFF
ARP/PING Setting	:	ON	OFF
AUTO IP Setting	:	ON	OFF

NOTE

- **[ARP/PING Setting] and [Auto IP Setting] cannot be set to “OFF” simultaneously.**
- **They will all be set to “ON” when [Manual Input] is changed to [Auto Input].**

- When it is set to [Manual Input], set the IP address, subnet mask and default gate way.

C. IPv6 Settings

(1) Use

- To set whether or not to use IP address (IPv6).
- To set whether to enter the IP address (IPv6) directly or to obtain it automatically.

(2) Procedure

- The default setting is ON.

"ON"	OFF

<Auto IPv6 Setting>

- To set whether or not to automatically obtain IP address (IPv6). When selecting [OFF], set a global address or gateway address.
- The default setting is ON.

"ON"	OFF

<DHCPv6 Setting>

- The default setting is ON.

"ON"	OFF

D. DNS Host

(1) Use

- To set the DNS host name.
- To set whether or not to enable the dynamic DNS setting.

(2) Procedure

<DNS Host Name>

1. Touch [DNS Host Name].
2. Enter the DNS host name on the screen key board, and touch [OK].

<Dynamic DNS Settings>

- The default setting is No Limit.

Enable	"No Limit"

E. DNS Domain

(1) Use

- To set whether or not to enable the auto obtaining for the DNS domain name.
- To set the DNS default domain name.
- To set the DNS search domain name.

(2) Procedure

<DNS Domain Name Auto Retrieval>

- The default setting is Enable.

"Enable"	No Limit

NOTE

- **"Enable" cannot be set when [IP Settings] is set to "Auto Input."**

<Search Domain Name Auto Retrieval>

- The default setting is Enable.

"Enable"	No Limit

- Touch [Default DNS Domain Name] or [DNS Search Domain Name 1 to 3], and enter the domain name using the keyboard on the screen and touch [OK].

F. DNS Server Settings (IPv4)

(1) Use

- To set whether or not to enable the auto obtaining of the DNS server address.
- To set the priority/substitute DNS server address.

(2) Procedure

<DNS Server Auto Obtain>

- The default setting is Enable.

"Enable"	No Limit

NOTE

- **"Enable" cannot be set when [IP Settings] is set to "Auto Input."**

<Priority/secondary DNS server.>

- Touch the corresponding key, and input the server address.

G. DNS Server Settings (IPv6)

(1) Use

- To set whether or not to enable the auto obtaining of the DNS server address.
- To set the priority/substitute DNS server address.

(2) Procedure

<DNS Server Auto Obtain>

- The default setting is Enable.

"Enable"	No Limit

NOTE

- **"Enable" cannot be set when [IP Settings] is set to "Auto Input."**

<Priority/secondary DNS server.>

- Touch the corresponding key, and input the server address.

H. IPsec Settings

(1) Use

- To set whether to use IPsec protocol for IP network communication.

(2) Procedure

- The default setting is OFF.

ON "OFF"

- When selecting [ON], make settings in [IKE Setting], [IPSec SA Setting], and [Peer].

I. IPsec Settings-IKE Settings

(1) Use

- To make the settings that relate to IKE (Internet Key Exchange) protocol which is used for IPsec communication.
- Settings can be made independently for four different sets (Group 1 to 4).

(2) Procedure

<Group>

- Among four groups (Group 1 to 4), select a group where settings are made.

<Encryption Algorithm>

- Set a encryption algorithm used for IPsec communication.
- The default setting is OFF.

DES_CBC 3DES_CBC "OFF"

<Authentication Algorithm>

- Set an authentication algorithm used for IPsec communication.
- The default setting is OFF.

MD5 SHA-1 "OFF"

<Key Validity Period>

- Set a key validity period.
- The default setting is 28800 (sec.).

80 to 604800 (sec.)

<Diffie-Hellman Group>

- Set Diffie-Hellman group.
- The default setting is Group 2.

J. IPsec Settings-IPsec SA Settings

(1) Use

- To make the settings that relate to IPsec SA (Security Association) which is used for IPsec communication.
- Settings can be made independently for eight different sets (Group 1 to 8).

(2) Procedure

<Group Set Number>

- Among Group 1 to 8, select a group where settings are made.
- After touching the key of the Group, make the following settings.
  (If the combination of each selection is not allowed among different settings, the key operation of the corresponding option is locked.)

<Security Protocol>

- Set a security protocol.
- The default setting is OFF.

AH ESP ESP_AH “OFF”

<ESP Encryption Algorithm>

- Set an encryption algorithm used for ESP protocol.
- The default setting is OFF.

DES_CBC 3DES_CBC AES_CBC AES_CTR NULL “OFF”

<ESP Authentication Algorithm>

- Set authentication algorithm used for ESP protocol.
- The default setting is OFF.

MD5 SHA-1 “OFF”

<AH Authentication Algorithm>

- Set authentication algorithm used for AH protocol.
- The default setting is OFF.

MD5 SHA-1 “OFF”

<Lifetime After Establishing SA>

- Set the period of time starting from when SA connection is established and ending when the SA connection is cut.
- The default setting is 3600 (sec.).

120 to 604800 (sec.)

K. IPsec Settings-Peer

(1) Use

- To register destinations used for IPsec communication.
- Settings can be made independently for different ten sets (Group 1 to 10).

(2) Procedure

<Peer>

- Among Group 1 to 10, select a group where settings are made.
- After touching the key of the Group, make the following setting.

<Encapsulation Mode>

- Set a encapsulation mode used for IPsec.
- The default setting is OFF.

Tunnel Mode Transport Mode "OFF"

<IP Address>

- When the encapsulation mode is set, specify the IP address of destinations.
- Touch [IP Address] and enter the IP address with IPv4 or IPv6 format.

<Pre-Shared Key Text>

- When the encapsulation mode is set, specify a Pre-shared key (Key data).
- Touch [Input] and enter the Pre-shared key.

<Perfect Forward Secrecy>

- When the transport mode is selected, set whether to use Perfect forward secrecy.
- The default setting is OFF.

ON "OFF"

L. IP Filtering (Permit Access)

(1) Use

- To set the IP filtering (Permit Access).
- To set whether to allow only IP addresses that are within a specified range.

(2) Procedure

1. Select Enable or "Disable".
2. When [Enable] is set, select one from Set 1 to Set 5 and specify the range of IP addresses to be allowed using the 10-key pad.
3. Touch [OK].

M. IP Filtering (Deny Access)

(1) Use

- To set the IP filtering (Deny Access).
- When [Enable] is set, select one from Set 1 to Set 5 and specify the range of IP addresses to be allowed using the 10-key pad.

(2) Procedure

1. Select Enable or "Disable".
2. When [Enable] is set, select one from Set 1 to Set 5 and enter the range of IP addresses to be denied using the 10-key pad.
3. Touch [OK].

N. RAW Port Number

(1) Use

- To set the RAW port number.
- Several data can be accepted at the same time by selecting several ports.

(2) Procedure

1. Select the necessary port number.
2. When using the selected port, press the Clear key to clear the value, and enter the RAW port number using the 10-key pad.
3. Touch [OK].

O. LLMNR Setting

(1) Use

- To set whether or not to enable LLMNR (Linklocal Multicast Name Resolution) setting.
- To perform the name resolution to send data to a computer with Windows Vista/Server 2008 installed, select [Enable].
  To perform the name resolution especially in the IPv6-only communication environment, enable this setting.

(2) Procedure

- The default setting is Enable.

"Enable"	No Limit

10.6.37 Network Setting-NetWare Settings

A. IPX Settings

(1) Use

- To enable or disable the NetWare (IPX) setting.
- To set the ethernet frame type.

(2) Procedure

<IPX Settings>

- The default setting is ON.

"ON"	OFF

<Ethernet Frame Type>

- The default setting is Auto Detect.

"Auto Detect"	802.2	802.3	Ethernet II	802.3SNAP

B. NetWare Print Settings

(1) Use

- To set whether to use the NetWare print mode.
- To set the NetWare print mode.
- To display NetWare status.

(2) Procedure

<NetWare Print Settings>

- The default setting is OFF.

ON	"OFF"

<NetWare Print Mode>

- The default setting is PServer.

"PServer"	Nprinter/Rprinter

- After selecting either key in the NetWare print mode setting, proceed to each setting screen.

<Status>

1. Touch [Status].
2. Touch up/down arrow keys to select the server to check.
3. Check the NetWare status.

C. P Server Settings: Print Server Name/Print Server Password

(1) Use

- To set the print server name and print server password.

(2) Procedure

1. Touch [Print Server name] or [Print Server Password].
2. Enter the print server name or the print server password (up to 63 characters) using the on-screen keyboard, and touch [OK].

D. P Server Settings: Polling Interval

(1) Use

- To set the polling interval.
- To set the interval to search the print queue.

(2) Procedure

1. Press the Clear key.
2. Enter the polling interval between 1 and 65535 using the 10-key pad.

E. P Server Settings: NDS/Bindery Setting

(1) Use

- To set whether to enable or disable the bindery setting when using NetWare4.x model and after.
- To enable the bindery service.

(2) Procedure

- The default setting is NDS.

"NDS"	NDS/Bindery

F. P Server Settings: File Server Name

(1) Use

- To set the full server name for the print server to logon.

(2) Procedure

1. Touch [File Server Name].
2. Enter the File server name (up to 47 characters) on the on-screen keyboard, and touch [OK].

G. P Server Settings: NDS Context Name

(1) Use

- To set the NDS context name (context name to register NDS print server).

(2) Procedure

1. Touch [NDS Context name].
2. Enter the NDS context name (up to 191 characters) on the on-screen keyboard, and touch [OK].

H. P Server Settings: NDS Tree Name

(1) Use

- To set the NDS tree name (name to login).

(2) Procedure

1. Touch [NDS Tree Name].
2. Enter the NDS tree name (up to 63 characters) on the on-screen keyboard, and touch [OK].

I. Nprinter/Rprinter Settings: Print Server Name

(1) Use

- To set the print server name.

(2) Procedure

1. Touch [Print Server Name].
2. Enter the printer name (up to 63 characters) on the on-screen keyboard, and touch [OK].

J. Nprinter/Rprinter Settings: Printer Number

(1) Use

- To set the printer number.

(2) Procedure

1. Touch [Auto] and cancel the reverse display.
2. Press the Clear key.
3. Enter the number between 0 and 254 using the 10-key pad.

K. User Authentication Setting (NDS)

(1) Use

- To set whether or not to use the user authentication setting.
- To conduct user authentication in netware environment.

(2) Procedure

- The default setting is ON.

"ON"	OFF

10.6.38 Network Setting-http Server Settings

- It will not be displayed when the following setting shows that authentication device is mounted.
  [Service Mode] → [Billing Setting] → [Management Function Choice]

A. http Server Settings

(1) Use

- To set whether or not to use the http server setting.

(2) Procedure

- The default setting is ON.

"ON" OFF

B. PSWC Settings

(1) Use

- To set whether to use the PageScope Web Connection.

(2) Procedure

- The default setting is ON.

"ON" OFF

C. IPP Settings

(1) Use

- To set whether to enable or disable IPP (Internet Printing Protocol) setting.

(2) Procedure

- The default setting is ON.

"ON" OFF

D. Accept IPP jobs

(1) Use

- To set whether to allow or restrict the IPP job.

(2) Procedure

- The default setting is ON.

"ON" OFF

E. Support Information

(1) Use

- To set the operation support information.
- For the response setting to see if IPP transmission supports each function.

(2) Procedure

1. Touch [Support Information].
2. Set "ON" or OFF for each item.

F. Printer Information

(1) Use

- To set the printer information.

(2) Procedure

1. Touch [Printer Information].
2. Enter the printer name, printer location, and printer information on the on-screen keyboard.
3. Touch [Print URI] to check the printer URI information.

G. IPP Authentication Settings

(1) Use

- To set whether or not to use the IPP authentication setting.

(2) Procedure

- The default setting is ON.

"ON" OFF

H. Authentication Method

(1) Use

- To set the authentication method for IPP authentication.

(2) Procedure

- The default setting is requesting-user-name.

"requesting-user-name" basic digest

I. User Name

(1) Use

- To set the User name for IPP authentication.

(2) Procedure

1. Touch [User Name].
2. Enter the user name on the on-screen keyboard, and touch [OK].

J. Password

(1) Use

- To set the password for IPP authentication.

(2) Procedure

1. Touch [Password].
2. Enter the password on the on-screen keyboard, and touch [OK].

K. realm

(1) Use

- To set the realm for identifying the authentication setting for IPP authentication.

(2) Procedure

1. Touch [realm].
2. Enter the realm on the on-screen keyboard, and touch [OK].

10.6.39 Network Setting-FTP Settings

A. FTP TX Settings

(1) Use

- To set whether to use FTP TX settings.

(2) Procedure

- The default setting is ON.

"ON" OFF

B. FTP TX Settings: Proxy Server Address

(1) Use

- To set the proxy server address.

(2) Procedure

1. Touch [Host Address].
2. Select [Input Host Name], [IPv4 Address Input], or [IPv6 Address Input] and enter a host address.

C. FTP TX Settings: Proxy Server Port Number

(1) Use

- To set the proxy server port number.

(2) Procedure

- Press the Clear key.
- Enter the proxy server port number between 1 and 65535 using the 10-key pad.

D. FTP TX Settings: Port No.

(1) Use

- To set the port number to be used for transmission with FTP server.

(2) Procedure

1. Touch [Input].
2. Press the Clear key.
3. Enter the proxy server port number between 1 and 65535 using the 10-Kay pad.

E. FTP TX Settings: Connection Timeout

(1) Use

- To set the timeout period for connecting to FTP server.

(2) Procedure

1. Touch [Input].
2. Press the Clear key.
3. Enter the connecting timeout period between 5 and 300 using the 10-key pad.

F. FTP Server Settings

(1) Use

- To set whether to use this machine as FTP server.

(2) Procedure

- The default setting is ON.

"ON" OFF

NOTE

- **[ON] cannot be selected when the following setting is set to "ON."**
  [Administrator Settings] → [Security Settings] → [Enhanced Security Mode]

10.6.40 Network Setting-SMB Setting

- It will not be displayed when the following setting shows that authentication device is mounted.
  [Service Mode] → [Billing Setting] → [Management Function Choice]

A. Client Settings

(1) Use

- To set whether or not to use the SMB transmission setting.
- To set whether or not to enable the user authentication setting by NTLM.
- To set the NTLM version for the user authentication.
  NTLM has v1 and v2. Select the version which suits the network environment.

(2) Procedure

<Client Settings>

- The default setting is ON.

"ON" OFF

<NTLM Settings>

- The default setting is v1.

"v1" v2 v1/v2

<User Authentication (NTLM)>

- The default setting is ON.

"ON" OFF

<DFS Setting>

- Select [ON] when using SMB transmission under an environment that uses a distributed file system (DFS).
- The default setting is Enable.

"Enable" Invalid

B. Print Settings

(1) Use

- To set whether to use SMB port or not in printer mode.

(2) Procedure

- The default setting is ON.

"ON" OFF

C. Print Settings: NetBIOS Name

(1) Use

- To set NetBIOS name.

(2) Procedure

1. Touch [NetBIOS Name].
2. Enter the NetBIOS name (up to 15 characters) on the on-screen keyboard, and touch [OK].

D. Print Settings: Print Service Name

(1) Use

- To set the print service name.

(2) Procedure

1. Touch [Print Service Name].
2. Enter the print service name (up to 13 characters) on the on-screen keyboard, and touch [OK].

E. Print Settings: Workgroup

(1) Use

- To set the workgroup.

(2) Procedure

1. Touch [Workgroup].
2. Enter the workgroup (up to 15 characters) on the on-screen keyboard, and touch [OK].

F. WINS Settings

(1) Use

- To set whether or not to enable the WINS setting.
- To use the WINS (Windows Internet Name Service) setting is necessary.
- By using the WINS, the traffic by broadcast can be reduced, and the communication becomes available with the network where broadcast does not reach.

(2) Procedure

- The default setting is ON.

"ON" OFF

G. WINS Settings: Automatic Retrieval Settings

(1) Use

- To set whether or not to enable the auto obtaining of the WINS server address.
- To acquire the WINS server address automatically.
- To obtain the WINS server address from DHCP server. If there are more than on address settings, up to two can be acquired.

(2) Procedure

- The default setting is Enable.

"Enable"	No Limit

H. WINS Settings: WINS Server Address 1, 2

(1) Use

- To set the WINS server address.
- To use when manually entering the WINS server address.
- The primary address and the secondary address can be set.
  (The primary address has the priority during operation.)

(2) Procedure

- Touch [1] or [2].
- Enter the WINS server address.

I. WINS Settings: Node Type Setting

(1) Use

- To set a node type.

(2) Procedure

- The default setting is H Node.

B Node	P Node	N Node	"H Node"

J. Direct Hosting Setting

(1) Use

- To set whether or not to enable the direct hosting setting.

(2) Procedure

- The default setting is ON.

"ON"	OFF

10.6.41 Network Setting-LDAP Settings

- It will not be displayed when the following setting shows that authentication device is mounted.
  [Service Mode] → [Billing Setting] → [Management Function Choice]

A. Enabling LDAP

(1) Use

- To set whether to enable or disable the LDAP function.

(2) Procedure

- The default setting is OFF.

ON	"OFF"

B. Setting Up LDAP

- Registration and/or setting concerning the LDAP server can be conducted.
- Touch [Setting Up LDAP], and select the optional blank key to register and/or set.

(1) LDAP Server Name

<Use>

- Set the LDAP server name.

<Procedure>

1. Touch [Server Name].
2. Enter the server name (up to 32 one-byte characters) on the on-screen keyboard, and touch [OK].

(2) Max. Search Results

<Use>

- To set the Max. results of address for LDAP search.

<Procedure>

1. Touch [Max. Search Results].
2. Press the Clear key.
3. Enter the Max. Search result numbers between 5 and 1000 using the 10-key pad.

(3) Timeout

<Use>

- To set the Max. timeout period for LDAP search.

<Procedure>

1. Touch [Timeout].
2. Press the Clear key.
3. Enter the timeout period between 5 and 300 using the 10-key pad.

(4) Initial Setting for Search Details

<Use>

- To set the initial items for search conditions in LDAP detail search.

<Procedure>

1. Touch [Initial Setting for Search Details].
2. Touch the key about condition for each search item, and select the condition.

(5) Check Connection

- It will not be displayed when [Enabling LDAP] is set to "OFF."
- It will not be displayed when the following is set to "Restrict."
  [Administrator Settings] → [Security Settings] → [Security Details] → [Manual Destination Input]

<Use>

- To check the connection with the LDAP server which has been set.

<Procedure>

1. Touch [Check Connection].
2. Confirm a proper connection and touch [Close].

(6) Reset All Settings

<Use>

- To return the contents registered in the LDAP server to what they were prior to the shipping.

<Procedure>

1. Touch [Reset All Settings].
2. Check the message and touch [Yes].
3. Touch [OK].

(7) Server Address

<Use>

- To set the LDAP server address.

<Procedure>

1. Touch [Server Address].
2. Select [Input Host Name], [IPv4 Address Input] or [IPv6 Address Input], and enter the server address.

(8) Search Base

<Use>

- To set the directory path for LDAP server.

<Procedure>

1. Touch [Search Base].
2. Enter the search base (up to 255 characters) on the on-screen keyboard, and touch [OK].

(9) SSL Setting

<Use>

- To set whether to use SSL (data encryption) for connecting to LDAP server.

<Procedure>

- The default setting is OFF.

ON “OFF”

(10) Port Number

<Use>

- To set the LDAP server port number.

<Procedure>

1. Touch [Input].
2. Press the Clear key.
3. Enter the port number between 1 and 65535 using the 10-Kay pad.

(11) Port Number (SSL)

<Use>

- To set the port number for LDAP server when using SSL.

<Procedure>

1. Touch [Input].
2. Press the Clear key.
3. Enter the port number between 1 and 65535 using the 10-Kay pad.

(12) Certificate Verification Level Settings)

<Use>

- To verify the server certificate, configure settings to verify the certificate.

<Procedure>

Expiration Date	: Select whether to check that the server certificate is within the validity period.
Key Usage	: Select whether to check that the server certificate is used according to the purpose approved by the issuer.
Chain	: Select whether to check that the server certificate chain (certification path) is correct. The chain is validated by referencing the external certificates managed on this machine.
Expiration Date Confirmation	: Select whether to check that the server certificate is within the validity period. The OCSP service and CRL (Certificate Revocation List) are checked in this order when the expiration date of the certificate is checked.
CN	: Select whether to check that the CN of the server certificate matches the server address.

(13) Authentication Type

<Use>

- To set the authentication method to logon to LDAP server.

Anonymous	: User name and password are not necessary (Dynamic authentication will be invalid when anonymous is selected.)
Simple	: Simple method which needs the user name and the password
Digest-MD5	: Method available with normal LDAP server. When failing to authenticate with Digest-MD5, it automatically switches to CRAM-MD5.
GSS-SPNEGO	: Method available with Windows active directory (Kerberos authentication).
NTLM (v1)	: Standard user authentication format used for Windows NT, etc.
NTLM (v2)	: Standard user authentication format used for Windows NT, etc. It has been applied to the Windows NT4.0 SP4 and later versions. Its security has been enhanced compared to v1.

<Procedure>

- The default setting is Anonymous.

“Anonymous” Simple Digest-MD5 GSS-SPNEGO NTLM v1 NTLM v2

(14) Select Server Authentication Method

<Use>

- To set the authentication system when conducting LDAP server authentication.
- To use when changing the server authentication system.

Use Set Value : It conducts authentication with the setting value set by [LDAP Server Registration].
Use User Authentication ID and Password : It conducts authentication with the registration data for the copier's user authentication.
Dynamic Authentication : It conducts authentication by dynamic authentication.

<Procedure>

- The default setting is Use Set Value.

"Use Set Value" Use User Authentication ID and Password Nprinter/Rprinter

(15) Referral Setting

<Use>

- To set whether or not to use the referral setting.
- To use when tracing the server with referral at the time of LDAP connection.

<Procedure>

- The default setting is ON.

"ON" OFF

(16) Login Name

<Use>

- To set the login name to connect to LDAP server.

<Procedure>

1. Touch [Login Name].
2. Enter the logon name (up to 255 characters) on the on-screen keyboard, and touch [OK].

NOTE

- **The setting is not available when authentication method is set to anonymous.**

(17) Password

<Use>

- To set the password for connecting to LDAP server.

<Procedure>

1. Touch [Password].
2. Enter the password (up to 63 characters) on the on-screen keyboard, and touch [OK].

NOTE

- **The setting is not available when authentication method is set to anonymous.**

(18) Domain Name

<Use>

- To set the domain name for connecting to LDAP server.

<Procedure>

1. Touch [Domain Name].
2. Enter the domain name (up to 64 characters) on the on-screen keyboard, and touch [OK].

C. Default LDAP Server Setting

(1) Use

- To set the server to be used as the default when searching LDAP.

(2) Procedure

1. Touch [Default LDAP Server Setting].
2. Select the optional server.

10.6.42 Network Setting-E-mail Settings

- It will not be displayed when the following setting shows that authentication device is mounted.
  [Service Mode] → [Billing Setting] → [Management Function Choice]

A. E-mail TX (SMTP)

(1) E-mail TX (SMTP)

<Use>

- To set whether to enable or disable the e-mail transmission setting.

<Procedure>

- The default setting is ON.

"ON" OFF

(2) Scan to E-mail

<Use>

- To set whether or not to transfer scanned data by e-mail.

<Procedure>

- The default setting is ON.

"ON" OFF

(3) Status Notification

<Use>

- To set whether or not to inform the status by e-mail.

<Procedure>

- The default setting is ON.

"ON" OFF

(4) Total Counter Notification

<Use>

- To set whether or not to inform the total counter by e-mail.

<Procedure>

- The default setting is ON.

"ON" OFF

(5) SMTP Server Address

<Use>

- To set the SMTP server address.

<Procedure>

1. Touch [Host Address].
2. Select [Input Host Name], [IPv4 Address Input] or [IPv6 Address Input], and enter the server address.

(6) Binary Division

<Use>

- To set whether to carry out binary division for data to be transmitted.

<Procedure>

- The default setting is OFF.

ON "OFF"

(7) Divided Mail Size

<Use>

- To set the dividing size when carrying out the binary division for data to be transmitted.
- To change the dividing size of the data.

<Procedure>

1. Press the Clear key.
2. Enter the dividing mail size between 100 and 15000 (in 100 increments) using the 10-key pad.

(8) Connection Timeout

<Use>

- To set the timeout period for connection in transmitting e-mail to SMTP server.

<Procedure>

- Select the timeout period using [+] / [-] keys.
- The default setting is 60 sec.

"60 sec." (30 to 300, in 30 sec. increments)

(9) Server Capacity

<Use>

- To set the Max. capacity per mail which SMTP server can receive.

<Procedure>

- The default setting is No Limit.

"No Limit" (1 to 100)

(10) SSL Setting

<Use>

- To set whether or not to use SSL when sending an e-mail.

<Procedure>

- The default setting is OFF.

SMTP over SSL	Start TLS	"OFF"

(11) Port No.

<Use>

- To set the port number for transmission with SMTP server.

<Procedure>

1. Touch [Input].
2. Press the Clear key.
3. Enter the port number between 1 and 65535 using the 10-key pad.

(12) Port Number (SSL)

<Use>

- To set the port number when using SSL.

<Procedure>

1. Touch [Input].
2. Touch the Clear key.
3. Enter the port number (SSL) between 1 and 65535 using the 10-key pad.

(13) Certificate Verification Level Settings)

<Use>

- To verify the server certificate, configure settings to verify the certificate.

<Procedure>

Expiration Date	: Select whether to check that the server certificate is within the validity period.
Key Usage	: Select whether to check that the server certificate is used according to the purpose approved by the issuer.
Chain	: Select whether to check that the server certificate chain (certification path) is correct. The chain is validated by referencing the external certificates managed on this machine.
Expiration Date Confirmation	: Select whether to check that the server certificate is within the validity period. The OCSP service and CRL (Certificate Revocation List) are checked in this order when the expiration date of the certificate is checked.
CN	: Select whether to check that the CN of the server certificate matches the server address.

(14) Detail Settings: SMTP Authentication

<Use>

- To set whether or not to enable SMTP authentication.

<Procedure>

- The default setting is OFF.

ON "OFF"

- When set to "ON", enter the [User ID], [Password] and [Domain Name].

(15) Detail Settings: POP Before SMTP Authentication

<Use>

- To set whether or not to enable the POP Before SMTP authentication.

<Procedure>

- The default setting is OFF.

ON "OFF"

(16) Detail Settings: POP Before SMTP Time

<Use>

- To set the time necessary for POP Before SMTP authentication.

<Procedure>

1. Touch [Input].
2. Press the Clear key.
3. Enter the time for POP Before SMTP between 0 and 60 using the 10-key pad.

B. E-mail RX (POP)

(1) E-mail RX (POP)

<Use>

- To set whether to enable or disable the e-mail reception setting.

<Procedure>

- The default setting is ON.

"ON" OFF

(2) POP Server Address

<Use>

- To set the POP server address.

<Procedure>

1. Touch [Host Address].
2. Select [Input Host Name], [IPv4 Address Input] or [IPv6 Address Input], and enter the server address.

(3) Connection Timeout

<Use>

- To set the timeout period for connection in receiving e-mail to POP server.

<Procedure>

- Select the timeout period of connection using [-]/[+] keys.

(4) SSL Setting

<Use>

- To set whether or not to use SSL when receiving an e-mail.

<Procedure>

- The default setting is OFF.

ON “OFF”

(5) Port No.

<Use>

- To set the port No. for transmitting with POP server.

<Procedure>

1. Touch [Input].
2. Touch the Clear key.
3. Enter the port No. between 1 and 65535 using the 10-key pad.

(6) Port Number (SSL)

<Use>

- To set the port number when using SSL.

<Procedure>

1. Touch [Input].
2. Touch the Clear key.
3. Enter the port number (SSL) between 1 and 65535 using the 10-key pad.

(7) Certificate Verification Level Settings)

<Use>

- To verify the server certificate, configure settings to verify the certificate.

<Procedure>

Expiration Date	: Select whether to check that the server certificate is within the validity period.
Key Usage	: Select whether to check that the server certificate is used according to the purpose approved by the issuer.
Chain	: Select whether to check that the server certificate chain (certification path) is correct. The chain is validated by referencing the external certificates managed on this machine.
Expiration Date Confirmation	: Select whether to check that the server certificate is within the validity period. The OCSP service and CRL (Certificate Revocation List) are checked in this order when the expiration date of the certificate is checked.
CN	: Select whether to check that the CN of the server certificate matches the server address.

(8) Login Name

<Use>

- To enter a login name used for POP server authentication.

<Procedure>

1. Touch [Login Name].
2. Enter a login name.

(9) Password

<Use>

- To enter a login name used for POP server authentication.

<Procedure>

1. Touch [Password].
2. Enter a password.

(10) APOP Authentication

<Use>

- To set whether to use APOP authentication.

<Procedure>

- The default setting is OFF.

ON "OFF"

(11) Check for New Messages

- It will not be displayed when either [Internet Fax] is set to "OFF" in the following settings. [Administrator Settings] → [Network Setting] → [Network Fax Setting] → [Network Fax Function Settings]

<Use>

- To set whether to automatically check a POP server for new messages.

<Procedure>

- The default setting is Yes.

"Yes" No

(12) Polling Interval

- It will not be displayed when either [Internet Fax] is set to "OFF" in the following settings. [Administrator Settings] → [Network Setting] → [Network Fax Setting] → [Network Fax Function Settings]

<Use>

- To set a polling interval at which a POP server is checked for new messages.

<Procedure>

- The default setting is 15 minutes.

1 to 60 minutes

C. S/MIME Communication Settings

(1) Use

- To set whether to activate S/MINE communication that provides encrypted E-mail transmission.

(2) Procedure

- The default setting is OFF.

ON "OFF"

D. S/MIME Communication Settings-Digital Signature

(1) Use

- Set whether to add a digital signature to S/MIME messages.

(2) Procedure

- The default setting is Do not add signature.

"Do not add signature" Always add signature Select when sending

E. S/MIME Communication Settings-E-mail Text Encryption Method

(1) Use

- To select an encryption method used for S/MIME E-mail text.

(2) Procedure

- The default setting is 3DES.

RC2-40 RC2-64 RC2-128 DES "3DES" AES-128 AES-192 AES-256

F. S/MIME Communication Settings-Print S/MIME Information

(1) Use

- To select whether to print S/MIME information when sending and receiving E-mail.

(2) Procedure

- The default setting is No.

Yes "No"

G. S/MIME Communication Settings-Automatically Obtain Certificates

(1) Use

- To set whether to automatically acquire a certificate when sending or receiving E-mail.

(2) Procedure

- The default setting is No.

Yes "No"

H. S/MIME Communication Settings-Certificate Verification Level Settings)

(1) Use

- To verify the server certificate, configure settings to verify the certificate.

(2) Procedure

Expiration Date	: Select whether to check that the server certificate is within the validity period.
Key Usage	: Select whether to check that the server certificate is used according to the purpose approved by the issuer.
Chain	: Select whether to check that the server certificate chain (certification path) is correct. The chain is validated by referencing the external certificates managed on this machine.
Expiration Date Confirmation	: Select whether to check that the server certificate is within the validity period. The OCSP service and CRL (Certificate Revocation List) are checked in this order when the expiration date of the certificate is checked.

10.6.43 Network Setting-SNMP Setting

A. SNMP Setting

(1) Use

- To set whether to use SNMP (Simple Network Management Protocol) or not.
- To set the SNMP version to be used.
- To readout management information base and to enter community name for writing.

(2) Procedure

- The default setting is ON.

"ON" OFF

- To individually set whether or not to use SNMP v1/v2c (IP), SNMP v3 (IP), and SNMP v1 (IPX).
- The default setting is ON.

"ON" OFF

B. UDP Port Number

(1) Use

- To set the UDP standby port number which is used for SNMP (IP).

(2) Procedure

1. Touch the Clear key.
2. Enter the port number between 1 and 65535 using the 10-key pad.

C. SNMP v1/v2c Settings

(1) Use

- To conduct setting when using SNMP v1/v2c.
- To use when entering the community name for reading the Management Information Base (MIB) and writing to it.

(2) Procedure

<Read Community Name Settings>

- Enter a Read community name.

<Write Setting>

- The default setting is Enable.

"Enable" Disable

NOTE

- **[Enable] cannot be selected when the following setting is set to "ON." [Administrator Settings] → [Security Setting] → [Enhanced Security Mode]**

<Write Community Name Settings>

- Enter a Write community name.

D. SNMP v3 Settings

(1) Context Name Settings

<Use>

- Set the context name which is used for SNMP v3.

<Procedure>

1. Touch [Name].
2. Enter the context name (up to 64 characters) on the on-screen key board, and touch [OK].

(2) Discovery User Permissions

<Use>

- To set whether or not to enable the discovery authority user which is used for SNMP v3.

<Procedure>

- The default setting is ON.

"ON" OFF

(3) Discovery User Name Settings

<Use>

- To set the name of the discovery authority users which is used for SNMP v3.

<Procedure>

1. Touch [Discovery User Name].
2. Enter the discovery user name (up to 32 characters) on the on-screen keyboard, and touch [OK].

NOTE

- **The user name same with the read user name or the write user name cannot be set.**

(4) Read User Name Settings

<Use>

- To set the read-only user name used for SNMP v3.

<Procedure>

1. Touch [Read User Name].
2. Enter the read user name (up to 32 characters) on the on-screen keyboard, and touch [OK].

NOTE

- **The user Name same with the discovery user name cannot be used.**

(5) Security Level

<Use>

- To set the security level of the read-only user used for SNMP v3.

  OFF : No authentication will be conducted when the read-only user accesses.

  auth-password : Conducts authentication only for the authentication password when the read-only user accesses.

  auth-Password/privpassword : Conducts authentication by authentication password and privacy password when read-only user accesses.

<Procedure>

- The default setting is auth-password/privpassword.

OFF	auth-password	“auth-password/privpassword”

(6) Password Setting

<Use>

- To set the Authentication password for the read-only User which is used for SNMP v3.

<Procedure>

1. Select a type of password.
2. Enter the password (up to 32 characters) on the on-screen keyboard, and touch [OK].

(7) Write User Name Settings

<Use>

- To set the name of the reading/writing authority user which is used for SNMP v3.

<Procedure>

1. Touch [Write User Name].
2. Enter the write user name (up to 32 characters) on the on-screen keyboard, and touch [OK].

NOTE

- **The user name same with the discovery use name cannot be used.**

(8) Security Level

<Use>

- To set the security level for the reading/writing authority user which is used for SNMP v3.
  - OFF : Authentication will not be conducted when reading/writing authority user accesses.
  - auth-password : Conducts authentication only with authentication password when reading/writing authority user accesses.
  - auth-password/privpassword : Conducts authentication by authentication password and privacy password when reading/writing authority user accesses.

<Procedure>

- The default setting is auth-password/privpassword.

OFF	auth-password	"auth-password/privpassword"

NOTE

- **[Authentication OFF] cannot be selected when the following setting is set to "ON." [Administrator Settings] → [Security Settings] → [Enhanced Security Mode]**

(9) Encryption Algorithm

<Use>

- To set the encryption algorithm in SNMPv3 communication.

<Procedure>

- The default setting is DES.

"DES"	AES-128

(10) Authentication Algorithm

<Use>

- To set the authentication algorithm in SNMPv3 communication.

<Procedure>

- The default setting is MD5.

"MD5"	SHA-1

E. TRAP Setting

(1) Use

- To set whether or not to allow the TRAP function.

(2) Procedure

- The default setting is Allow.

"Allow"	Restrict

F. TRAP Setting When Authentication failed

(1) Use

- To set whether or not to enable the TRAP function when authentication failed.

(2) Procedure

- The default setting is Invalid.

Enable	"Invalid"

10.6.44 Network Setting-AppleTalk Settings

- It will not be displayed when the following setting shows that authentication device is mounted.
  [Service Mode] → [Billing Setting] → [Management Function Choice]

A. AppleTalk Settings

(1) Use

- To set whether to enable or disable the AppleTalk setting.

(2) Procedure

- The default setting is OFF.

ON "OFF"

B. Printer Name

(1) Use

- To set the printer name displayed on the AppleTalk network.

(2) Procedure

1. Touch [Printer Name].
2. Enter the printer name (up to 31 characters) on the on-screen keyboard, and touch [OK].

C. Zone Name

(1) Use

- To set the zone name connected with AppleTalk network.

(2) Procedure

1. Touch [Zone Name].
2. Enter the zone name (up to 31 characters) on the on-screen keyboard, and touch [OK].

D. Current Zone

(1) Use

- To display the current zone on AppleTalk network.

10.6.45 Network Setting-Bonjour Setting

A. Bonjour Setting

(1) Use

- To use when operating under the Bonjour service environment.

(2) Procedure

- The default setting is ON.

"ON" OFF

B. Bonjour Name

(1) Use

- To set the name for identifying over the bonjour network.

(2) Procedure

1. Touch [Bonjour Name].
2. Enter the Bonjour name (up to 64 characters) on the on-screen keyboard, and touch [OK].

10.6.46 Network Setting-TCP Socket Settings

A. TCP Socket

(1) Use

- To set whether or not to set the TCP socket.
- To set the port number for TCP socket transmission.

(2) Procedure

- The default setting is ON.

"ON" OFF

<Port Number>

1. Touch the Clear key.
2. Enter the port number between 1 and 65535 using the 10-key pad.

- When SSL Certificate is registered, the following can be set.

<SSL Setting>

- The default setting is OFF.

ON "OFF"

<Port Number>

1. Touch [Enter].
2. Press Clear key.
3. Enter a port number within the range between 1 and 65535 with the 10-key pad.

<Port Number (SSL)>

1. Touch [Enter].
2. Press Clear key.
3. Enter a port number within the range between 1 and 65535 with the 10-key pad.

B. TCP Socket (ASCII Mode)

(1) Use

- To set whether or not to set the TCP socket for ASCII mode.
- To set the port number which is used for TCP socket transmission by ASCII mode.

(2) Procedure

- The default setting is ON.

"ON" OFF

<Port Number (ASCII Mode)>

1. Touch the Clear key.
2. Enter the port number between 1 and 65535 using the 10-key pad.

10.6.47 Network Setting-Network Fax Setting

- It will not be displayed on the screen when all items are set to “OFF” in the following settings.
  [Service Mode] → [System 2] → [Network Fax Settings]

A. Network Fax Function Settings

(1) IP Address Fax Function

- Setting will be available only when [IP Address Fax] is set to “ON” in the following settings.
  [Service Mode] → [System 2] → [Network Fax Settings]

<Use>

- To set whether or not to use IP address fax function.

<Procedure>

- The default setting is OFF.

ON “OFF”

(2) Internet Fax Function

- Setting will be available only when [Internet Fax] is set to “ON” in the following settings.
  [Service Mode] → [System 2] → [Network Fax Settings]

<Use>

- To set whether or not to use Internet fax function.

<Procedure>

- The default setting is OFF.

ON “OFF”

B. SMTP TX Settings

(1) Use

- To set SMTP TX when network fax function is being used.
- To set SMTP TX port number and connecting time out period when network fax function is being used.

(2) Procedure

<Port Number>

1. Touch [Input].
2. Enter the port number between 1 and 65535 using the 10-key pad.

<Connection Timeout>

1. Touch [Input].
2. Enter the connection timeout time between 5 and 1000 (sec.) using the 10-key pad.

C. SMTP RX Settings

(1) Use

- To set SMTP RX when network fax function is being used.
- To set SMTP RX port number and connecting time out period when network fax function is being used.

(2) Procedure

<SMTP RX>

- The default setting is ON.

"ON" OFF

<Port No.>

1. Touch [Input].
2. Enter the port number between 1 and 65535 using the 10-key pad.

<Connection Timeout>

1. Touch [Input].
2. Enter the connection timeout time between 5 and 1000 (sec.) using the 10-key pad.

10.6.48 Network Setting-WebDAV Settings

A. WebDAV Client Settings

(1) WebDAV Client Setting

<Use>

- To set whether to use WebDAV Client Settings.

<Procedure>

- The default setting is ON.

"ON" OFF

(2) WebDAV Client Settings: Proxy Server Address

<Use>

- To set the proxy server address.

<Procedure>

1. Touch [Host Address].
2. Select [Input Host Name], [IPv4 Address Input], or [IPv6 Address Input] and enter a host address.

(3) WebDAV Client Settings: Proxy Server Port Number

<Use>

- To set the proxy server port number.

<Procedure>

1. Press the Clear key.
2. Enter the proxy server port number between 1 and 65535 using the 10-key pad.

(4) WebDAV Client Settings: User Name

<Use>

- To set the user name for WebDAV authentication.

<Procedure>

1. Touch [User Name].
2. Enter the user name on the on-screen keyboard, and touch [OK].

(5) WebDAV Client Settings: Password

<Use>

- To set the password for WebDAV authentication.

<Procedure>

1. Touch [Password].
2. Enter the password on the on-screen keyboard, and touch [OK].

(6) WebDAV Client Settings: Connection Timeout

<Use>

- To set the timeout period for connecting to WebDAV server.

<Procedure>

1. Touch [Input].
2. Press the Clear key.
3. Enter the connecting timeout period between 5 and 300 using the 10-key pad.

(7) WebDAV Client Settings: Server Authentication Character Code

<Use>

- To set a character code used during WebDAV server authentication.

<Procedure>

- The default setting is UTF-8.

"UTF-8"	Windows Code page

(8) WebDAV Client Settings: Certificate Verification Level Settings

<Use>

- To verify the server certificate, configure settings to verify the certificate.

<Procedure>

Expiration Date	: Select whether to check that the server certificate is within the validity period.
Key Usage	: Select whether to check that the server certificate is used according to the purpose approved by the issuer.
Chain	: Select whether to check that the server certificate chain (certification path) is correct. The chain is validated by referencing the external certificates managed on this machine.
Expiration Date Confirmation	: Select whether to check that the server certificate is within the validity period. The OCSP service and CRL (Certificate Revocation List) are checked in this order when the expiration date of the certificate is checked.
CN	: Select whether to check that the CN of the server certificate matches the server address.

B. WebDAV Server Settings

(1) WebDAV Server Setting

<Use>

- To set whether to use WebDAV Server Settings.

<Procedure>

- The default setting is ON.

"ON" OFF

(2) WebDAV Server Settings: SSL Setting

- It is displayed only when SSL Certificate is registered.

<Use>

- To set whether to use SSL/TSL for communications when using the machine as WebDAV server.

<Procedure>

- The default setting is Non-SSL Only.

"Non-SSL Only" SSL Only SSL/Non-SSL

NOTE

- **When "ON" is selected in [Administrator Settings] → [Security Settings] → [Enhanced Security Mode], only [SSL Only] is selectable.**

(3) WebDAV Server Settings: Password Setting

<Use>

- To set a password to access WebDAV server.

<Procedure>

1. Touch [Password Setting].
2. Enter a password with the keyboard on the screen, and touch [OK].

- Touching [Initial Password] can restore the default password setting. (Default password: sysadm)

10.6.49 Network Setting-Web Service Settings

A. Web Service Common Settings

(1) Web Service Common Settings: Friendly Name

<Use>

- To define a friendly name that is used when printing a job with WSD (Web Service on Devices) function.

<Procedure>

1. Touch [Friendly Name].
2. Enter the friendly name (up to 62 characters) on the on-screen keyboard, and touch [OK].

(2) Web Service Common Settings: Publication Service

<Use>

- To set whether or not to enable Publication Service.
- Select [Enable] when using this machine under an environment where communication is possible only with Windows Vista's IPv6.

<Procedure>

- The default setting is Invalid.

Enable	"Invalid"

(3) Web Service Common Settings: SSL Setting

- It will be displayed only when SSL Certificate is registered.

<Use>

- To set whether to use SSL when using WSD (Web Service on Devices) function.

<Procedure>

- The default setting is OFF.

ON	"OFF"

(4) Web Service Common Settings: Certificate Verification Level Settings

- It will be displayed only when SSL Certificate is registered.

<Use>

- To verify the server certificate, configure settings to verify the certificate.

<Procedure>

Expiration Date	: Select whether to check that the server certificate is within the validity period.
Key Usage	: Select whether to check that the server certificate is used according to the purpose approved by the issuer.
Chain	: Select whether to check that the server certificate chain (certification path) is correct. The chain is validated by referencing the external certificates managed on this machine.
Expiration Date Confirmation	: Select whether to check that the server certificate is within the validity period. The OCSP service and CRL (Certificate Revocation List) are checked in this order when the expiration date of the certificate is checked.

B. Printer Settings

(1) Printer Settings

<Use>

- To set whether to use this printer as a WSD printer.

<Procedure>

- The default setting is OFF.

ON	"OFF"

(2) Printer Settings: Printer Name

<Use>

- To set the WS printer name.

<Procedure>

1. Touch [Printer Name].
2. Enter the friendly name (up to 63 characters) on the on-screen keyboard, and touch [OK].

(3) Printer Settings: Printer Location

<Use>

- To set the WS printer location.

<Procedure>

1. Touch [Printer Location].
2. Enter the friendly name (up to 63 characters) on the on-screen keyboard, and touch [OK].

(4) Printer Settings: Printer Information

<Use>

- To set the WS printer information.

<Procedure>

1. Touch [Printer Information].
2. Enter the friendly name (up to 63 characters) on the on-screen keyboard, and touch [OK].

C. Scanner Settings

(1) Scanner Settings

<Use>

- To set whether to use this machine as a WSD scanner.

<Procedure>

- The default setting is ON.

"ON" OFF

(2) Scanner Settings: Scanner Name

<Use>

- To set the WSD scanner name.

<Procedure>

1. Touch [Scanner Name].
2. Enter the friendly name (up to 63 characters) on the on-screen keyboard, and touch [OK].

(3) Scanner Settings: Scanner Location

<Use>

- To set the WS scanner location.

<Procedure>

1. Touch [Scanner Location].
2. Enter the friendly name (up to 63 characters) on the on-screen keyboard, and touch [OK].

(4) Scanner Settings: Scanner Information

<Use>

- To set the WS scanner information.

<Procedure>

1. Touch [Scanner Information].
2. Enter the friendly name (up to 63 characters) on the on-screen keyboard, and touch [OK].

(5) Scanner Settings: Connection Timeout

<Use>

- To set the timeout period for connection of WS scanner.

<Procedure>

1. Press the Clear key.
2. Enter the connecting timeout period between 30 and 300 using the 10-key pad.

10.6.50 Network Setting-SSDP Settings

A. Use

- To set whether to use SSDP protocol.
- To set the multicast TTL value.

B. Procedure

- The default setting is ON.

"ON" OFF

<Multicast TTL Setting >

- The default setting is 1.

"1" to 10

10.6.51 Network Setting-Detail Settings

A. Device Setting

(1) MAC Address

<Use>

- To display the MAC address of the machine.

<Procedure>

- The address cannot be changed.

(2) Network Speed

<Use>

- To set the network speed.

<Procedure>

- The default setting is Auto.

"Auto"	10Mbps Full Duplex	10Mbps Half Duplex
100Mbps Full Duplex	100Mbps Half Duplex	1Gbps Full Duplex

NOTE

- **When Network speed setting is changed, turn off the main power switch and turn it on again more than 10 seconds after.**

(3) LLTD Setting

<Use>

- To set whether or not to enable LLTD (Link Layer Topology Discovery).
- By enabling LLTD, Windows Vista's Network Map can show this machine's location on the network.

<Procedure>

- The default setting is Enable.

"Enable" Disable

B. Time Adjustment Setting

(1) Use

- To set whether to enable or disable the NTP setting.
- To synchronize the time between the server and the client.

(2) Procedure

- The default setting is OFF.

ON "OFF"

C. Time Adjustment Setting-Auto IPv6 Retrieval

(1) Use

- To set whether or not to automatically obtain NTP server's IPv6 address.

(2) Procedure

- The default setting is ON.

"ON" OFF

D. Time Adjustment Setting-NTP Server Setting

(1) Use

- To set the NTP server address.

(2) Procedure

<Host Address>

1. Touch [Host Address].
2. Select [IP Address Input], and enter the IP address.
3. Select [Host name Input], and enter the host name.

<Port Number>

1. Touch the Clear key.
2. Enter the port number between 1 and 65535 using the 10-key pad.

E. Time Adjustment Setting-Auto Time Adjustment

(1) Use

- To set whether or not to automatically adjust time.

(2) Procedure

- The default setting is Off.

On "Off"

F. Time Adjustment Setting-Polling Interval

(1) Use

- To set a polling interval when Auto Time Adjustment is set to ON.

(2) Procedure

1. Press the Clear key.
2. Enter a polling interval within the range between 1 to 240 hours with the 10-key pad.

G. Status Notification Setting

- It will not be displayed when the following setting shows that authentication device is mounted.
  [Service Mode] → [Billing Setting] → [Management Function Choice]
- To notify status, notifications both by E-mail and by SNMP TRAP function can be set. For E-mail, up to ten IP addresses and one IPX address can be set. For SNMP TRAP function, up to five IP addresses and one IPX can be set.

(1) Register Notification Address (IP Address)

<Use>

- To set IP addresses to which machine status notifications are sent.
- Up to 5 addresses can be registered.

<Procedure>

1. From IP address 1 to 5, select an IP address where settings are made.
2. Touch [Host Address].
3. Select [Input Host], [IPv4 Address Input] or [IPv6 Address Input] and enter a host address.
4. Touch the Clear key and enter a port number within the range of 1 to 65535 using the 10-key pad.
5. Touch [Community Name] and enter a community name.
6. Touch [Notification Item] and set the items to be notified to [ON].
7. Touch [OK] and finish the settings.

(2) Register Notification Address (IPX Address)

<Use>

- To set IPX addresses to which machine status notifications are sent.

<Procedure>

1. Touch [IPX Address].
2. Touch [Network Address] or [Node Address] and enter an address.
3. Touch [Community Name] and enter a community name.
4. Touch [Notification Item] and set the items to be notified to [ON].
5. Touch [OK] and finish the settings.

(3) Register Notification Address (E-mail Address)

<Use>

- To set E-mail addresses to which machine status notifications are sent.
- Up to 10 addresses can be registered.

<Procedure>

1. Touch [Forward].
2. From E-mail addresses 1 to 10, select an E-mail address where settings are made.
3. Touch [Edit E-mail Address].
4. Enter an E-mail address (up to 320 one-byte characters) using the keyboard on the screen and touch [OK].
5. Touch [Notification Item] and set the items to be notified to [ON].
6. Touch [OK] and finish the settings.

H. Total Counter Notification Settings

(1) Notification Schedule Setting

<Use>

- To set the schedule for informing the total counter value.
- Two different schedules can be set for reporting.

<Procedure>

1. Touch [Schedule 1] or [Schedule 2].
2. Select the reporting cycle from [Daily], [Weekly] or [Monthly].
3. When selecting [Daily] for the reporting cycle, set the Interval of day(s).
4. When selecting [Weekly] for the reporting cycle, set the Interval of week(s) and day of the Week.
5. When selecting [Monthly] for the reporting cycle, set the Interval of month(s) and date of the month.

(2) Notification Address Setting

<Use>

- To set the e-mail address for reporting the total counter value.
- Up to three e-mail addresses can be set.
- It can be selected whether to apply the schedule of the [Set Schedule] to each address.

<Procedure>

1. Touch [Address 1], [Address 2] or [Address 3].
2. Touch [E-mail Address Edit].
3. Enter the e-mail address (up to 320 one-byte characters) on the on-screen keyboard, and touch [OK].
4. Touch [Set Schedule].
5. Select ON/OFF for each schedule.

(3) Model Name

<Use>

- To set the device name for identifying the copier when reporting the total counter.

<Procedure>

1. Touch [Model Name].
2. Enter the model name (up to 20 one-byte characters) on the on-screen keyboard, and touch [OK].

(4) Send Now

<Use>

- To transfer the current total counter value to the set address.

I. PING Confirmation

(1) Use

- To set the TCP/IP network diagnosis by PING.

(2) Procedure

1. Touch [Host Address] for PING transmission.
2. Select [Input Host Name], [IPv4 Address Input], or [IPv6 Address Input] and enter a host address.
3. Touch [Check Connection] key to check the connection.

J. SLP Setting

(1) Use

- To set whether to use SLP or not.
  Device search will be available with TWAIN by setting SLP enable.

(2) Procedure

- The default setting is Enable.

"Enable"	Disable

K. LPD Setting

(1) Use

- To set whether to use LPD during printing or not.

(2) Procedure

- The default setting is Enable.

"Enable"	Disable

L. Prefix/Suffix Setting

(1) ON/OFF Setting

<Use>

- To set whether to add prefix or suffix to the address when calling or entering an address.

<Procedure>

- The default setting is OFF.

ON	"OFF"

(2) Prefix/Suffix Setting

<Use>

- To register or change the prefix or suffix.
- Eight types of prefix and suffix can be added.
  Prefix: Letters added to the top of the text (header part)
  Suffix: Letters added to the bottom of the text (footer part)

<Procedure>

- Available number to be registered as prefix is up to 20 characters.
- Available number to be registered as suffix is up to 64 characters.

M. Error Code Display Setting

(1) Use

- To set whether or not to display an error code when a network-related error occurs.
- To help to identify the cause of network error by displaying an error code.

(2) Procedure

- The default setting is OFF.

ON "OFF"

10.6.52 Network Settings-IEEE802.1X Authentication Settings

A. Use

- To set whether or not to use IEEE802.1X authentication.
- To display IEEE802.1X authentication status.
- To initialize IEEE802.1X authentication settings.

NOTE

- **IEEE802.1X authentication settings are made with PageScope Web Connection.**

B. Procedure

- The default setting is OFF.

ON "OFF"

<Auth. Status>

- Displays present IEEE802.1X authentication status.

<Reset Job Settings>

- Returns all IEEE802.1X authentication settings to initial values.

<Certificate Verification Level Settings>

- Sets a certificate verification method for server certificate verification.

Expiration Date	: Select whether to check that the server certificate is within the validity period.
CN	: Select whether to check that the CN of the server certificate matches the server address.
Chain	: Select whether to check that the server certificate chain (certification path) is correct. The chain is validated by referencing the external certificates managed on this machine.

10.6.53 Network Settings-Web Browser Setting

- It will be displayed in bizhub C652/C552 machines where the function version is version 2 or later and in all bizhub C452 machines.
- It will be displayed only when the optional i-Option (LK-101 v2 or LK-103 v2) is activated.

A. Use

- To set whether to use the web browser function.

B. Procedure

- The default setting is Enable.

"Enable" Invalid

10.6.54 Network Settings-Bluetooth Setting

- It will be displayed in bizhub C652/C552 machines where the function version is version 2 or later and in all bizhub C452 machines.
- [It will be displayed only when the following setting is set to "Invalid."
  [Service Mode] → [System 2] → [Bluetooth Settings]

A. Use

- To set whether to enable or disable the Bluetooth function.

B. Procedure

- The default setting is Enable.

"Enable"	Invalid

10.6.55 Copier Settings-Auto Zoom (Platen)

A. Use

- To set whether to function the auto zoom when the tray is selected with document set on the original glass (excepting at automatic paper selection mode.)

B. Use

- The default setting is OFF.

ON	"OFF"

10.6.56 Copier Settings-Auto Zoom (ADF)

A. Use

- To set whether to function the auto zoom when the feed tray is selected with document set on the ADF (excepting at automatic paper selection mode.)

B. Procedure

- The default setting is ON.

"ON"	OFF

10.6.57 Copier Settings-Specify Default Tray when APS OFF

A. Use

- To set the tray to be used when APS is cancelled.
- To set the tray (tray 1) for the default setting when cancelling APS.

B. Procedure

- The default setting is Tray Before APS ON.

"Tray Before APS ON"	Default Tray

10.6.58 Copier Settings-Select Tray for Insert Sheet

A. Use

- To select the initial value for the tray for the cover sheet paper.

B. Procedure

- The default setting is Tray 2.

10.6.59 Copier Settings-Print Jobs During Copy Operation

A. Use

- To set whether to receive printing jobs for print data or fax data during copy operation.
- To restrict receiving printing jobs for print data or fax data during copy operation.

  Accept : Receives the print data or fax data and print
  Receive Only : Print data or fax data will be printed when the copy operation is finished

B. Procedure

- The default setting is Accept.

"Accept" Receive Only

10.6.60 Copier Settings-Tri-Fold Print Side

- It will be displayed only when the optional finisher is mounted.

A. Use

- Specifies the side of copies to be folded.

  Inside : Folds paper in three with the printed side in.
  Outside : Folds paper in three with the printed side out.

B. Procedure

- The default setting is Inside.

Outside "Inside"

10.6.61 Copier Settings-Automatic Image Rotation

A. Use

- Select whether or not the image is automatically rotated when the document and copy paper orientations are different.

  When Auto Paper / Auto Zoom / Reduce is set : If the "Auto" Paper setting, "Auto" Zoom setting or a Reduce setting is selected, the image is automatically rotated to fit the orientation of the paper.
  When Auto Paper / Auto Zoom is set : If the "Auto" Paper setting or "Auto" Zoom setting is selected, the image is automatically rotated to fit the orientation of the paper.
  When Auto Zoom / Reduce is set : If the "Auto" Zoom setting or a Reduce setting is selected, the image is automatically rotated to fit the orientation of the paper.
  When Auto Zoom is set : If the "Auto" Zoom setting is selected, the image is automatically rotated to fit the orientation of the paper.

B. Procedure

- The default setting is When Auto Paper / Auto Zoom is set.

When Auto Paper / Auto Zoom / Reduce is set "When Auto Paper / Auto Zoom is set"
When Auto Zoom / Reduce is set When Auto Zoom is set

10.6.62 Copier Settings-Card Shot Settings

- It will be displayed in bizhub C652/C552 machines where the function version is version 2 or later and in all bizhub C452 machines.

A. Layout

(1) Use

- To set the initial copy layout setting in card shot mode.

(2) Procedure

- The default setting is Top/Bottom.

"Top/Bottom" Left/Right (Top Half) Left/Right

B. Zoom

(1) Use

- To set the initial zoom setting in card shot mode.

(2) Procedure

- The default setting is Full Size.

"Full Size" x 1.0

C. Store Original Size

(1) Use

- To pre-register original sizes that are used in card shot mode.

(2) Procedure

- Enter an original size, name it, and register the data.

10.6.63 Printer Settings-USB Timeout

A. Use

- To set a period of time that elapses before input and output timeouts of communication are activated.

B. Procedure

- The default setting is 60 seconds for input and output timeouts.

"60 seconds" (10 to 1000 seconds)

10.6.64 Printer Settings-Network Timeout

A. Use

- To set a period of time that elapses before input and output timeouts of communication are activated.

B. Procedure

- The default setting is 60 seconds for input and output timeouts.

"60 seconds" (10 to 1000 seconds)

10.6.65 Printer Settings-Print XPS Errors

A. Use

- To set whether to print error information when an error occurs while printing a XPS file.

B. Procedure

- The default setting is Yes.

"Yes" No

10.6.66 Printer Settings-PSWC Direct Print

A. Use

- To set whether or not to allow direct print with PageScope Web Connection.

B. Procedure

- The default setting is No.

Yes "No"

10.6.67 Fax Settings

- Settings are available only when the optional fax kit (FK-502) is mounted.

10.6.68 Fax Settings-Header Information

A. Use

- To register the name of the sender and fax ID which will be printed when transmitting fax.

B. Procedure

1. Touch [Sender] and enter the name of the sender (up to 30 characters) on the on-screen keyboard.
2. Enter Sender Fax No. (up to 20 characters) using the 10-key pad and [+], [Space] displayed on the screen.

10.6.69 Fax Settings-Header/Footer Position

A. Header Position

(1) Use

- To set the position to print the header when transmitting fax.

(2) Procedure

- The default setting is Outside Body Text.

Inside Body Text "Outside Body Text" OFF

NOTE

- **[Outside Body Text] cannot be selected for Internet Fax/IP Address Fax.**

B. Print Receiver's Name

- It will not be displayed on the screen when [Fax Target] is set to beside "US" or "HK" in the following settings.
  [Service Mode] → [System 1] → [Marketing Area]

(1) Use

- To set whether to print the information of TX destination (Registered name or Fax No.) when transmitting fax.

(2) Procedure

- The default setting is OFF.

ON	"OFF"

C. Footer Position

(1) Use

- To set whether to print the footer when transmitting fax.

(2) Procedure

- The default setting is OFF.

Inside Body Text	Outside Body Text	"OFF"

NOTE

- **[Outside Body Text] cannot be selected for the color mode of Internet Fax/IP Address Fax.**

10.6.70 Fax Settings-Line Parameter Setting

A. Dialing Method

(1) Use

- To set the dialing method.
- The displays are different depending on the country.

(2) Procedure

- The default setting is PB.

"PB"	10 pps

NOTE

- **The displays are different depending on the country.**

B. Receive Mode

- It will not be displayed when the following setting shows that management device 2 is mounted.
  [Service Mode] → [Billing Setting] → [Management Function Choice]

(1) Use

- To set the fax reception mode.
- To change to manual reception when using the remote reception function, etc. when connected to the external telephone.

(2) Procedure

- The default setting is Auto RX.

"Auto RX"	Manual RX

C. Number of RX Call Rings

(1) Use

- To set the number of times to receive call rings.
- To change the number of times of the fake ringback tone after it starts calling until it starts receiving.

(2) Procedure

- The default setting is 2 X.

"2 X" (0 to 15)

D. Number of Redials

(1) Use

- To set the number of redials.
- To change the number of times to redial when the line is busy, etc.
- The line which can be set up is different depending on the country.

(2) Procedure

- The default setting is 3 X.

"3 X" (0 to 7)

NOTE

- **The line which can be set up is different depending on the country.**

E. Redial Interval

(1) Use

- To set the interval for redialing.

(2) Procedure

- The default setting is 3 min.

"3 min" (1 to 15)

F. Line Monitor Sound

(1) Use

- To set whether to output the line monitor sound from the speaker or not.

(2) Procedure

- The default setting is ON.

"ON" OFF

G. Line Monitor Sound Vol.

(1) Use

- To set the volume of the speaker.

(2) Procedure

- Change the volume by touching the [Lower] or [Higher].

10.6.71 Fax Settings-TX/RX Settings

A. Duplex Print (RX)

- It will not be displayed when [Print Separate Fax Pages] is set to "ON."

(1) Use

- To set whether to carry out the duplex print for the received original when receiving fax.

(2) Procedure

- The default setting is OFF.

ON "OFF"

B. Letter/Ledger over A4/A3

(1) Use

- To set weather to use the inch paper priority when receiving fax.

(2) Procedure

ON OFF

NOTE

- **The default setting is different depending on the country.**

C. Print Paper Selection

(1) Use

- To set the priority for paper feed tray when receiving fax.
  Auto select : Selected automatically
  Priority Size : Printed on size with priority. When the size is not set, it will be printed on the closest size.
  Fixed Size : Printed only on the fixed size.

(2) Procedure

- The default setting is Auto Select.

"Auto Select" Fixed Size Priority Size

D. Print Paper Size

(1) Use

- To set the paper size to print the text when receiving fax.
- The displays are different depending on the country.
- To make the setting of [Print Paper Size] enable, set [Tray Selection for RX Print] to [Auto].

(2) Procedure

- The initial setting is A4.

A3 B4 "A4"

NOTE

- **The displays are different depending on the country.**

E. Incorrect User Box No. Entry

(1) Use

- To set the operation when the unregistered box number is entered.

(2) Procedure

- The default setting is Print.

"Print" Show Error Message Auto Create User Box

F. Tray Selection for RX Print

(1) Use

- To select the paper tray to be fixed when printing the received text.

(2) Procedure

- The default setting is Auto.
- Items available for selection are different depending on the paper feed option mounted.

"Auto" Tray 1 Tray 2 Tray 3 Tray 4

G. Min. Reduction for RX Print

(1) Use

- To set the print magnification for received text.

(2) Procedure

- The default setting is 96.

"96" (87 to 96, x1.0)

H. Print Separate Fax Pages

- It will not be displayed when [Duplex print (RX)] is set to "ON."

(1) Use

- To set whether to divide the original into pages when it is longer than the standard size.

(2) Procedure

- The default setting is OFF.

ON "OFF"

I. File After Polling TX

(1) Use

- To set whether to delete the original which polling transmission has been completed.

(2) Procedure

- The default setting is Delete.

"Delete" Save

J. No. of Sets (RX)

(1) Use

- To set the number of copies to be printed with the received document.

(2) Procedure

- The default setting is 1 set.

1 to 10 set.

10.6.72 Fax Settings-Function Settings

A. Function ON/OFF Setting

(1) F-Code TX

<Use>

- To set whether to use the F code transmission.

<Procedure>

- The default setting is ON.

"ON" OFF

NOTE

- **When the setting is changed, turn off the main power switch and turn it on again more than 10 seconds after.**

(2) Relay RX

- It will be displayed when the following setting is set to "ON."
  [Service Mode] → [FAX] → [System] → [Display Setting] → [Relay]

<Use>

- To set whether to use the relay RX function.
- To use the machine as the relay delivery station during relay TX.

<Procedure>

- The default setting is ON.

"ON" OFF

(3) Relay Printing

- It will be displayed when the following setting is set to "ON."
  [Service Mode] → [FAX] → [System] → [Display Setting] → [Relay]

<Use>

- To set whether to use the relay print function.
- To print out the document that the machine relayed during relay TX.
- The relay print will be output in the following case.
  1. When the relay delivery completes appropriately.
  2. When the delivery job is cancelled halfway by turning OFF sub power switch.
  3. When the delivery job is cancelled due to redial over.
  4. When main power switch is turned OFF/ON during relay print error.
  5. When delivery job is deleted in user operation during redialing.
  6. When delivery job is deleted in user operation during relay delivery.

<Procedure>

- The default setting is OFF.

ON "OFF"

(4) Destination Check Display Function

<Use>

- To set whether or not to display the list of specified addresses when sending the fax.

<Procedure>

- The default setting is OFF.

ON "OFF"

(5) Confirm Address (TX)

<Use>

- To set whether to use Confirm Address (the machine displays the screen where the user reenters the fax number for confirmation when the user faxes by entering the fax number directly with the keys).

<Procedure>

- The default setting is OFF.

ON "OFF"

(6) Confirm Address (Register)

<Use>

- To set whether to use Confirm Address (the machine displays the screen where the user reenters the fax number for confirmation when the user faxes by entering the fax number directly with the keys).

<Procedure>

- The default setting is OFF.

ON "OFF"

B. Memory RX Setting

- It will be displayed only when the following setting is set to "ON."
  [Service Mode] → [FAX] → [System] → [Display Setting] → [Compulsory Memory RX]
- It will not be displayed when [PC-FAX RX Setting], [Forward TX Setting] or [TSI User Box Setting] is set to "ON."
- It will not be displayed when the following setting shows that vendor is mounted.
  [Service Mode] → [Billing Setting] → [Management Function Choice]

(1) Use

- To set whether to use the forced memory RX function.
- To store the received text in the hard disk without printing, and print it out when ordered.

(2) Procedure

- The default setting is NO.
- Enter the password (up to 8 digits) for printing when set to [ON].

C. Closed Network RX

- It will be displayed when the following setting is set to "ON."
  [Service Mode] → [FAX] → [System] → [Display Setting] → [Closed area RX]

(1) Use

- To set whether to use the closed network function.
- To receive data only from the device which password matches.

(2) Procedure

- The default setting is OFF.
- When set to [ON], enter the password (up to 4 digits) to be used.

D. Forward TX Setting

- It will not be displayed when [PC-FAX RX Setting], [Memory RX] or [TSI User Box Setting] is set to "ON."
- It will not be displayed when the following setting shows that Vendor or Authentication Device is mounted.
  [Service Mode] → [Billing Setting] → [Management Function Choice]

(1) Use

- To set whether to use the forward fax function.
- To forward the received text to the receiver which has been specified.
  Forward & Print : Forward the received text, and print all out
  Forward & Print (If TX Fails): Forward the received text, and prints out only when fails to be forwarded

(2) Procedure

<Forward TX Setting>

- The default setting is No.
- When set to [Yes], set the address to forward to.

E. Incomplete TX Hold

- It will be displayed when the following setting is set to "ON."
  [Service Mode] → [FAX] → [System] → [Display Setting] → [Re-Transmission]
- It will not be displayed when the following setting shows that Management Device 2 is mounted.
  [Service Mode] → [Billing Setting] → [Management Function Choice]

(1) Use

- To set whether to use incomplete TX hold function.
- To re-send the data failed to be sent after a given time.

(2) Procedure

- The default setting is No.

  Yes "No"

- When set to Yes, specify the Incomplete TX Hold Time.

F. PC-Fax RX Setting

- It will not be displayed when [Forward TX Setting], [Memory RX] or [TSI User Box Setting] is set to "ON."

(1) Use

- To set whether to use the PC-FAX reception function.
- To store the received text file in the box in the hard disk.

(2) Procedure

- The default setting is Restrict.

Allow "Restrict"

- When Allow is selected, make the settings of Receiving user box destination, Print ON/OFF, and Password check ON/OFF.

G. TSI User Box Setting

- It will not be displayed when [Forward TX Setting], [Memory RX] or [PC-Fax RX Setting] is set to "ON."

(1) Use

- To set whether to use TSI distribution or not.
- To set setting method when there is no matched box at receiving.
  Automatically Print : To print the received data.
  Memory RX Use Box : To store the received data in the forced memory receiving box.

(2) Procedure

<TSI User Box Setting>

- The default setting is No.

Yes "No"

- Press [TSI User Box Registration] and register the distribution.

<Non-matched Box Setting>

- The default setting is Automatically Print.

"Automatically Print" Memory RX User Box

10.6.73 Fax Settings-PBX Connection Setting

A. Use

- To set whether to use PBX connection setting or not.
- This will be used when the machine is connected to PBX line.

B. Procedure

- The default setting is No.
- When set to [Yes], enter the external number between 0 and 9999.

10.6.74 Fax Settings-Report Settings

A. Activity Report

- It will not be displayed when the following setting shows that vendor or authentication device is mounted.
  [Service Mode] → [Billing Setting] → [Management Function Choice]

(1) Use

- To set whether to print out the activity report or not, and also the timing for printing.

(2) Procedure

- The default setting is ON.

"ON" OFF

- When this setting is set to ON, make the setting of Output Setting.
- The default setting is Every 100 Comm.

Daily "Every 100 Comm." 100/ Daily

B. TX Result Report

(1) Use

- To set whether to print out the TX report, and also the timing for printing.

(2) Procedure

- The default setting is If TX Fails.

ON "If TX Fails" OFF

C. Sequential TX Report

(1) Use

- To set whether to print out the sequential TX report or not.

(2) Procedure

- The default setting is ON.

"ON" OFF

D. Timer Reservation TX Report

(1) Use

- To set whether to print out the reservation TX or not.

(2) Procedure

- The default setting is ON.

"ON" OFF

E. Confidential RX Report

(1) Use

- To set whether to print out the confidential RX report.

(2) Procedure

- The default setting is ON.

"ON" OFF

F. Bulletin TX Report

(1) Use

- To set whether to print out the bulletin TX report or not.

(2) Procedure

- The default setting is ON.

"ON" OFF

G. Relay TX Result Report

- It will be displayed when the following setting is set to "ON."
  [Service Mode] → [FAX] → [System] → [Display Setting] → [Relay]

(1) Use

- To set whether to print out the relay TX result report or not.
- To print out the relay TX result report after the relay delivery is completed when the machine is used as the relay delivery station.

(2) Procedure

- The default setting is ON.

"ON" OFF

H. Relay Request Report

- It will be displayed when the following setting is set to "ON."
  [Service Mode] → [FAX] → [System] → [Display Setting] → [Relay]

(1) Use

- To set whether to print out the relay request RX report or not.
- To print out the relay request RX report during relay request RX when the machine is used as the relay delivery station.

(2) Procedure

- The default setting is ON.

"ON" OFF

I. PC-Fax TX Error Report

(1) Use

- To set whether to print out the PC-fax TX error report or not.

(2) Procedure

- The default setting is OFF.

ON "OFF"

J. Broadcast Result Report

(1) Use

- To set the format to output the broadcast result report.
  All Destinations : Outputs all reports after transmitting to all addresses
  Each Destination : Outputs a report after each transmission

(2) Procedure

- The default setting is All Destinations.

"All Destinations" Each Destination

K. TX Result Report Check

(1) Use

- To set whether to display the TX result report screen.

(2) Procedure

- The default setting is OFF.

ON "OFF"

L. Network Fax RX Error Report

- Settings will be available when either [IP Address Fax] or [Internet Fax] is set to "ON" in the following settings.
  [Administrator Settings] → [Network Setting] → [Network Fax Setting] → [Network Fax Function Settings]

(1) Use

- To set whether to print RX error report when network fax function is being used.
- To print the error report at unusual situation such as receiving the image data that cannot be processed.

(2) Procedure

- The default setting is OFF.

ON "OFF"

M. MDN Message

- Settings will be available only when [Internet Fax] is set to "ON" in the following settings.
  [Administrator Settings] → [Network Setting] → [Network Fax Setting] → [Network Fax Function Settings]

(1) Use

- To set whether to print message when receiving response message to MDN request when internet fax function is being used.

(2) Procedure

- The default setting is ON

"ON" OFF

N. DSN Message

- Settings will be available only when [Internet Fax] is set to “ON” in the following settings. [Administrator Settings] → [Network Setting] → [Network Fax Setting] → [Network Fax Function Settings]

(1) Use

- To set whether to print message when receiving response message to DSN request when network fax function is being used.

(2) Procedure

- The default setting is OFF.

ON “OFF”

O. Print E-mail Message Body

- Settings will be available only when [Internet Fax] is set to “ON” in the following settings. [Administrator Settings] → [Network Setting] → [Network Fax Setting] → [Network Fax Function Settings]

(1) Use

- To set whether to print mail text received normally as the report when internet fax function is being used.

(2) Procedure

- The default setting is ON.

“ON” OFF

10.6.75 Fax Settings-Job Settings List

- It will not be displayed when the following setting shows that Vendor is mounted.
  [Service Mode] → [Billing Setting] → [Management Function Choice]
  (It will be displayed when the Key counter is mounted or when the following setting shows that switch No.33 is set to [01] at HEX assignment.
  [Service Mode] → [System 2] → [Software Switch Setting])

(1) Use

- The set value list of the fax set up into this machine can be printed.

(2) Procedure

1. Touch [Administrator Settings] → [Fax Setting] → [Job Settings List].
2. Select the feed tray.
3. Select the simplex or duplex print, and touch the Start key.

10.6.76 Fax Settings-Multi Lines Settings

- It will be displayed only when the optional fax kit (FK-502) line 2 is mounted.

A. Line Parameter Setting

(1) Dialing Method

<Use>

- To set the dial method for the expanded line.

<Procedure>

- The default setting is PB.

"PB" 10 pps

NOTE

- **The displays are different depending on the country.**

(2) Number of Rx Call Rings

<Use>

- To set the number of RX call rings for the expanded line.
- To change the number of artificial ringback tones with expanded line when receiving calls until it starts receiving operation.

<Procedure>

- The default setting is 2 X.

"2 X" (0 to 15)

(3) Line Monitor Sound

<Use>

- To set whether or not to output the line monitor sound of the expanded line from the speaker.

<Procedure>

- The default setting is ON.

"ON" OFF

B. Function Settings

(1) PC-FAX TX Setting

- This setting does not appear when "RX Only" is selected for [Multi Line Settings].

<Use>

- To set the number of the line used for PC-FAX transmission.

<Procedure>

- The default setting is No Selection.

"No Selection" Line 1 Line 2

C. Multi Lines Setting

(1) Use

- To set the system for using each line when using more than one line.

(2) Procedure

<Multi Line Usage>

- When selecting [Normal], perform the transmission setting for Line 2.

<Line 2 Setting>

- The default setting is TX and RX.

"TX and RX" RX Only TX Only

D. Sender Fax No.

(1) Use

- To register the fax ID when using the additional line.

(2) Procedure

- Use 10-key pad or [+] / [space], enter the fax ID (up to 20 characters).

10.6.77 Fax Settings-Network Fax Settings

- It will be displayed only when either [IP Address Fax] or [Internet Fax] is set to "ON" in the following settings.
  [Administrator Settings] → [Network Settings] → [Network Fax Settings] → [Network Fax Function Settings]

A. Black Compression Level

- It will be displayed only when either [IP Address Fax] or [Internet Fax] is set to "ON" in the following settings.
  [Administrator Settings] → [Network Settings] → [Network Fax Settings] → [Network Fax Function Settings]

(1) Use

- To set black compression level at monochrome TX mode when network fax function is being used.

(2) Procedure

- The default setting is MH.

"MH" MR MMR

B. Color/Grayscale Multi-Value Compression Method

- It will be displayed only when either [IP Address Fax] or [Internet Fax] is set to "ON" in the following settings.
  [Administrator Settings] → [Network Settings] → [Network Fax Settings] → [Network Fax Function Settings]

(1) Use

- To set a color/black multi value compression method used when faxing selecting JPEG or PDF as a file format under network fax operation.
  JPEG (Color) : Data is compressed in color JPEG format.
  JPEG (Gray Scale) : Data is compressed in monochrome JPEG format.
  Unset : Data transmission in color or grayscale is disabled. Data is compressed in black and white (binary) with a specified compression method.

(2) Procedure

- The default setting is JPEG (Color).

"JPEG (Color)" JPEG (Gray Scale) Unset

C. Internet Fax Self Rx Ability

- It will be displayed only when [Internet Fax] is set to "ON" in the following settings.
  [Administrator Settings] → [Network Settings] → [Network Fax Settings] → [Network Fax Function Settings]

(1) Use

- To set image data compression system, paper size and resolution, which can be received by the machine with internet fax.

(2) Procedure

- The following shows the options of each setting item.

Compression Type	Paper Size	Resolution
JPEG (Color)	A3	600 x 600 (Ultra Fine)
JPEG (Gray Scale)	B4	400 x 400 (Super Fine)
MMR	A4	200 x 200 (Fine)
MR	—	200 x 100 (Std.)
MH	—	—

D. I-Fax Advanced Settings

- It will be displayed only when [Internet Fax] is set to "ON" in the following settings. [Administrator Settings] → [Network Settings] → [Network Fax Settings] → [Network Fax Function Settings]

(1) Use

- To set advanced functions of internet fax.

MDN Request	: To set whether to send MDN (Message Disposition Notification) request when transmitting through internet fax.
DSN Request	: To set whether to send DSN (Delivery Status Notification) request when transmitting through internet fax.
MDN Response	: To set whether to response for MDN request made by the other machine when receiving through internet fax.
MDN/DSN Response Watch Time	: To set the period to observe the response from the other machine when sending MDN/DSN request. In the case of time over, time out message is notified.
Max Resolution	: To set maximum resolution for reading, TX/RX and record when internet fax function is being used.
Add Content-Type Information	: To set whether or not to add Content-Type information when using Internet fax. When [Yes] is selected, "application=faxbw" is added as sub-type to MIME Content-Type header.

NOTE

- **Only MDN Request will be sent when both MDN Request and DSN Request are set to "ON."**

(2) Procedure

- Default settings are shown below.

MDN Request	: "ON"	OFF
DSN Request	: ON	"OFF"
MDN Response	: "ON"	OFF
MDN/DSN Response Watch Time	: "24 hours" (1 to 99)	OFF
Max Resolution	: 400 x 400	"600 x 600"
Add Content-Type Information	: Yes	"Do Not Send"

E. IP Address Fax Operation Settings

- It will be displayed in bizhub C652/C552 machines where the function version is version 2 or later and in all bizhub C452 machines.
- It will not be displayed when [IP Address Fax Function] is set to "OFF" in the following settings.
  [Administrator Settings] → [Network Settings] → [Network Fax Settings] → [Network Fax Function Settings]

(1) Use

- To set the operational mode applied to IP address fax.
  Mode1: This mode allows communication between Konica Minolta models capable of transmitting IP address faxes and models compatible with the Direct SMTP standard defined by CIAJ. However, a unique method developed for Konica Minolta models is used to transmit a color fax.
  Mode2: This mode allows communication between Konica Minolta models capable of transmitting IP address faxes and models compatible with the Direct SMTP standard defined by CIAJ. The transmission in color mode is performed in the communication mode (Profile-C format) compatible with the Direct SMTP standard.

(2) Procedure

<Operation Mode>

- The default setting is Mode1.

"Mode1" Mode2

- When selecting Mode 2, make color original transmission settings.

10.6.78 System Connection-OpenAPI Settings

A. Access Setting

(1) Use

- To allow or restrict the access from other systems with OpenAPI when using Page Scope Data Administrator.

(2) Procedure

- The default setting is Allow.

"Allow" Restrict

B. SSL/Port Settings

(1) Use

- To set the SSL/access port for other systems with OpenAPI.

(2) Procedure

<SSL Setting>

- The default setting is Non-SSL Only.

"Non-SSL Only" SSL Only SSL/Non-SSL

<Port No./Port No.(SSL)>

1. Select Port No. or Port No. (SSL), and touch [Input].
2. Press the Clear key.
3. Enter the port number between 1 and 65535 using the 10-key pad.

<Client Certificates>

- The default setting is Do Not Request.

Request "Do Not Request"

<Certificate Verification Level Settings>

Expiration Date	: Select whether to check that the server certificate is within the validity period.
Key Usage	: Select whether to check that the server certificate is used according to the purpose approved by the issuer.
Chain	: Select whether to check that the server certificate chain (certification path) is correct. The chain is validated by referencing the external certificates managed on this machine.
Expiration Date Confirmation	: Select whether to check that the server certificate is within the validity period. The OCSP service and CRL (Certificate Revocation List) are checked in this order when the expiration date of the certificate is checked.
CN	: Select whether to check that the CN of the server certificate matches the server address.

C. Authentication

(1) Use

- To set whether to authenticate access of other systems which uses OpenAPI when using PageScope Data Administrator.
- To set authentication of the access from other systems using OpenAPI.

(2) Procedure

- The default setting is OFF.

ON "OFF"

- When setting to [ON], enter the login name and the password to be set.

10.6.79 System Connection-Call Remote Center

- It will be displayed when the setup at the CS Remote Care center is complete.

A. Use

- To call the CS Remote Care center from the administrator, when the CS Remote Care setup is complete.

B. Procedure

For details, see “CS Remote Care.”
See P.491

10.6.80 System Connection-Automatic Prefix/Suffix Setting

- It will be displayed in bizhub C652/C552 machines where the function version is version 2 or later and in all bizhub C452 machines.

(1) Use

- Select whether to automatically add prefix and suffix to a destination number.

(2) Procedure

- The default setting is OFF.

ON	“OFF”

10.6.81 System Connection-Printer Information

- It will be displayed in bizhub C652/C552 machines where the function version is version 2 or later and in all bizhub C452 machines.
- It will be displayed only when the optional local interface kit EK-605 is mounted.

A. Use

- Specify [Printer Name], [Printer Location], [Printer Information], and [Printer URI]. The [Printer Information] setting is linked to [Printer Information] in [HTTP Server Settings].

B. Procedure

1. Touch [Printer Information].
2. Enter the printer name, printer location and printer information using the keyboard on the display.
3. Touch [Printer URI], and confirm the printer URI information.

10.6.82 System Connection-Cellular Phone/PDA Setting

- It will be displayed in bizhub C652/C552 machines where the function version is version 2 or later and in all bizhub C452 machines.
- It will be displayed only when the optional local interface kit EK-605 is mounted.

A. Use

- Specify whether to allow the user to print data in a cellular phone or PDA or save such data in a User Box.

B. Procedure

- The default setting is Restrict.

Allow	“Restrict”

10.6.83 Security Settings-Administrator Password

A. Use

- To set/change the administrator password.

B. Procedure

- Enter the administrator password on the on-screen keyboard.
  Current Password : Enter the current administrator password
  New Password : Enter the new administrator password to be used
  Re-Input Password : Re-enter the new administrator password

NOTE

- **When selecting [Utility] → [Administrator Settings] → [Security Setting] → [Security Details] leads to [Password Rules] being ON, the password with the same letters, the password which is same as the previous one and the password of less than eight digits cannot be changed.**

10.6.84 Security Settings-User Box Admin. Setting

- Setting is disabled if user authentication or account track is not performed.

A. Use

- To set whether to allow or restrict the box administrator to use the system.
- To allow the box administrator to use the system.
  The box administrator is the special administrator for box, who is allowed to browse contents in common box / individual box without the password.

NOTE

- **[Allow] cannot be set when the user authentication or account track is not carried out.**

B. Procedure

- The default setting is Restrict.

Allow “Restrict”

NOTE

- **[Allow] cannot be selected when user authentication and account track are not conducted.**
- **[Allow] cannot be selected when the following setting is set to “ON.”
  [Administrator Settings] → [Security Settings] → [Enhanced Security Mode]**

- Set the password when setting to [Allow].

NOTE

- **When the following setting shows that [Password Rules] is set to “ON”, the Password using only a single letter or the password same with the previous one, or the password with less than eight letters cannot be accepted.
  [Administrator Settings] → [Security Settings]**

10.6.85 Security Settings-Administrator Security Levels

- It will not be displayed when the following setting shows that vendor or authentication device 1 is mounted.
  [Service Mode] → [Billing Setting] → [Management Function Choice]

A. Use

- To set the level for administrator settings item open to the user.
- To make part of the administrator settings items open to the user.

  Level 1 : [Power Save Setting], [Auto Magnification Selection (Platen)], [Auto Magnification Selection (ADF)], [Specify Default Tray when APS Off], [Select Tray for Insert Sheet] and [Card Shot Settings] are available to users. 1

  Level 2 : [Power Save Setting], [Output Setting], [Date/Time Setting], [Daylight Savings Time Setting], [AE Level Adjustment], [Auto Magnification Selection (Platen)], [Auto Magnification Selection (ADF)], [Specify Default Tray when APS Off], [Select Tray for Insert Sheet], and [Print Jobs During Copy Operation] are available to users.

  Prohibit : Not to allow the user to set neither Level 1 nor Level 2

B. Procedure

- The default setting is Prohibit.

Level 1 Level 2 “Prohibit”

10.6.86 Security Settings-Security Details

A. Password Rules

(1) Use

- To set whether to apply the password rules.
- To apply the password rule to enhance security.
- Passwords to be covered: CE password, administrator password, public user box password, user password, account track password, passwords for confidential documents, SNMPv3 WriteUser password, WebDAV server password.
- Details of the password rules:
  Password except user password, public user box password, SNMPv3 WriteUser password shall be 8 digits of one-bite alphanumeric characters. (Case-sensitive)
  User password shall be 8 to 64 digits of one-bite alphanumeric characters. (Case-sensitive)
  Public user box password shall be 8 digits of one-bite alphanumeric characters.
  SNMPv3 WriteUser password shall be 8 to 32 digits of one-bite alphanumeric characters.
  Password with only the same letter is prohibited.
  Password same with the one prior to change is prohibited.

When the password rule is set to [ON], the password cannot be changed or registered unless it follows the above conditions.

(2) Procedure

- The default setting is OFF.

ON "OFF"

NOTE

- **[OFF] cannot be selected when the following setting is set to "ON."**
  [Administrator Settings] → [Security Settings] → [Enhances Security Mode]
- **[ON] cannot be selected when the following setting is set to "OFF."**
  [Service Mode] → [Enhanced Security] → [CE Authentication]
  [CE Authentication] will not be displayed and cannot be set to "OFF" when [Password Rules] is set to "ON."

B. Prohibited Functions When Authentication Error

(1) Use

- To set the function for prohibiting authentication operation in order to prevent the unauthorized access.
- To use when setting the system to prohibit authentication failure when conducting authentication by password, etc.
- Authentications which are subjected to this function: CE authentication, administrator authentication, user+ accounts authentication, SNMP authentication, secure print authentication, user box authentication.

Mode 1 : When failed to authenticate, authentication operation (entering the password) will be prohibited for a certain period of time.

Mode 2 : When failed to authenticate, authentication operation (entering the password) will be prohibited for a certain period of time.
The number of times failure occurred will be counted, and when the number reaches to the specified time, authentication will be prohibited and the access will be locked.
When the access is locked, touch [Release] on the main body, or turn main power switch OFF/ON to cancel it.
For CE authentication and administrator authentication, only turning main power switch OFF/ON will cancel it.
When the machine goes into an access lock condition, release the lock in the following procedure.

User+ accounts authentication SNMP authentication Secure print authentication User box authentication	• Touch keys in the following order. [Administrator Settings] → [Security Setting] → [Security Details] → [Prohibited Functions When Authentication Error]. Then touch [Release].
Administrator authentication	• After the main power switch is turned OFF and ON, the access lock is released automatically after the lapse of a predetermined period of time.
	• [Service Mode] → [Enhanced Security] → [Administrator unlocking]
CE authentication	• The lock release timer starts to operate by input the Stop → 0 → 9 → 3 → 1 → 7 in [Meter Count] → [Check Details] → [Coverage Rate] after the main power switch is turned OFF and On. When the timer reaches the time specified in this setting, the access lock is released.

(2) Procedure

- The default setting is Mode 1.

"Mode 1" Mode 2

NOTE

- **[Mode1] cannot be selected when the following setting is set to "ON."**
  [Administrator Settings] → [Security Setting] → [Enhanced Security Mode]
- **Only the number of times for trials up to the access lock can be changed.**
- When [Mode 2] is selected, set the number of times where checks are made before access is locked.
- Touch [Release Time Settings] and set a period of time that elapses before access lock is released.

C. Confidential Document Access Method

(1) Use

- To display the status of the authentication system on the control panel for the confidential document access.
- It cannot be changed at the operator's option since it will automatically be set according to the [Prohibit Functions When Auth. Error] setting.
- It will be set to [Mode 1] when [Prohibit Functions When Auth. Error] is set to [Mode 1].
  It will be set to [Mode 2] when [Prohibit Functions when Auth. Error] is set to [Mode 2].

Mode 1 : This mode is for authentication by confidential document ID and password. It displays the list of the corresponding confidential document to print them.
Mode 2 : This mode is for authentication by confidential document ID. It displays the list of the corresponding confidential document, and print them with authentication by password.

NOTE

- **[Mode1] cannot be selected when the following setting is set to "ON."**
  [Administrator Settings] → [Security Setting] → [Enhanced Security Mode]

(2) Procedure

- The default setting is Mode 1.

"Mode 1" Mode 2

D. Manual Destination Input

(1) Use

- To set whether to allow or prohibit to manually enter the destination address on the destination Input screen.
- To prohibit entering the destination address manually.

(2) Procedure

- The default setting is Allow.

"Allow" Restrict

E. Print Data Capture

(1) Use

- To set whether to allow or restrict capturing the print job data.
- To be used when carrying out [Service Mode] → [System 2] → [Data capture].

(2) Procedure

- The default setting is Allow.

"Allow" Restrict

NOTE

- **[Allow] cannot be selected when the following setting is set to "ON." [Administrator Settings] → [Security Setting] → [Enhanced Security Mode]**

F. Job Log Settings

(1) Use

- Selects whether to keep logs of operations and access made by users and service engineers.
- To set whether to overwrite existing logs.
- To ensure security, this settings is used to keep logs of operations and access including security settings changes, authentication, and job executions by users and service engineers.
- Logs are saved in HDD and NVRAM.

(2) Procedure

- The default setting is No.

Yes "No"

NOTE

- **After selecting "Yes", the main power switch must be turned OFF and ON so that the new setting takes effect.**
- **When ON is selected in [Administrator Settings] → [Security Settings] → [Enhanced Security Mode], this setting is automatically set to "Yes."**

<Overwrite>

- Set whether to allow or restrict overwriting existing logs when saving audit logs.
- The default setting is Restrict.

Allow "Restrict"

- To erase audit logs, press [Erase Job Log].

G. Restrict Fax TX

(1) Use

- To set whether or not to prohibit sending fax.

(2) Procedure

- The default setting is OFF.

ON "OFF"

H. Hide Personal Information

- It will not be displayed when the two settings below are as follows:
  The authentication device is set in [Service Mode] → [Billing Setting] → [Function Management Choice] → [Authentication Device].
  "NO" is selected in [Administrator Settings] → [Security Settings] → [Function Management Settings] → [Authentication Device Setting] → [Job Confirmation Display].

(1) Use

- Selects whether to display file names and destinations in job logs.

(2) Procedure

- The default setting is OFF.

ON	"OFF"

I. Display Activity Log

- It will not be displayed when both settings are as follows:
  The authentication device is set in [Service Mode] → [Billing Setting] → [Function Management Choice] → [Authentication Device].
  "NO" is selected in [Administrator Settings] → [Security Settings] → [Function Management Settings] → [Authentication Device Setting] → [Job Confirmation Display].

(1) Use

- Selects whether to display communication logs for scan/fax transmission.

(2) Procedure

- The default setting is ON.

"ON"	OFF

J. Initialize

(1) Use

- All data of selected items is cleared.
- Data of the following items can be cleared.
  - Job history
  - Copy Program
  - Network Settings
  - One-Touch/User Box Registration

(2) Procedure

1. Touch [Initialize].
2. Select the desired item to clear its data and touch [OK].
3. Select [Yes] on the confirmation screen and touch [OK] to initialize the data.

K. Job History Thumbnail Display

(1) Use

- To set whether or not to display a thumbnail of originals when displaying a job history.

(2) Procedure

- The default setting is OFF.

ON	"OFF"

L. Secure Print Only

(1) Use

- To set whether or not to allow only Secure Print for print jobs from PC.
  When “ON” is selected in this setting, the Secure Print feature must be always used for printing from a printer driver. As all print jobs require ID or a password, output documents remains private.

(2) Procedure

- The default setting is OFF.

ON “OFF”

⚠1 **M. Copy Guard**

- It will be displayed in bizhub C652/C552 machines where the function version is version 2 or later and in all bizhub C452 machines.
- It will be displayed only when the optional security kit SC-507 is mounted.

(1) Use

- Specify whether to use the Copy Guard function.
  If [Copy Guard] is selected in [Application], you can embed copy inhibit information on paper.
- This is used upon set-up of the optional security kit SC-507.

(2) Procedure

- The default setting is No.

Yes “No”

⚠1 **N. Password Copy**

- It will be displayed in bizhub C652/C552 machines where the function version is version 2 or later and in all bizhub C452 machines.
- It will be displayed only when the optional security kit SC-507 is mounted.

(1) Use

- Specify whether to use the Password Copy function.
  If [Password Copy] is selected in [Application], you can embed a password on paper. You can also detect a password embedded on paper.
- This is used upon set-up of the optional security kit SC-507.

(2) Procedure

- The default setting is No.

Yes “No”

O. Web browser contents access

- It will be displayed in bizhub C652/C552 machines where the function version is version 2 or later and in all bizhub C452 machines.

(1) Use

- To set whether to enable or disable access to locally-stored files (pre-installed contents, image files, and help files) from the web browser that is interacting with MFP via OpenAPI applications.

(2) Procedure

- The default setting is Allow.

"Allow" Restrict

* When using the application where server authentication is carried out by web browser extensions, [Allow] is automatically selected.

10.6.87 Security Settings-Enhanced Security Mode

A. Use

- To set whether or not to enhance security.
- To use when enhancing the security function at user's option.
- The following settings are necessary for setting the security enhancement "ON".

Administrator Password : Change it with the one which meets password rules.
User Authentication : Set to "User Authentication (MFP)" or "User Authentication (External Server)".
HDD encryption word : Set the encryption word with 20 characters.
SSL Certificate : Register self-certificate for SSL communication from the PSWC.
Image Controller Setting : Set to [Controller 0].
CE Password : Change it with the one which meets password rules.
CE Authentication : Set to [ON].
Image Controller Setting : Set to [Controller 0].
Management Function Choice : Set to "Unset."

B. Procedure

- The default setting is OFF.

ON "OFF"

NOTE

- **Setting the Enhanced Security Mode "ON" will change the setting values for the following functions.**

Name of the function	Default setting	When Enhanced Security Mode is ON
Password Rules	OFF	ON (Cannot be changed)
Prohibit Functions When Auth. Error	Mode 1	Mode 2 (Cannot be changed) set to three times *Can change times (from once to three times)
User Name List	OFF	OFF (Cannot be change)
Print without Authentication	Restrict	Restrict (Cannot be changed)
User Box Admin. Setting	Restrict	Restrict (Cannot be changed)
Secure Document Access Method	Mode 1	Mode 2 (Cannot be changed) *It will be changed according to "Prohibit Functions When Auth. Error".

Name of the function	Default setting	When Enhanced Security Mode is ON
Job History Thumbnail Display	OFF	OFF (Cannot be changed)
SSL	OFF	ON (Cannot be changed)
FTP Server	ON	OFF (Cannot be changed)
SNMPv1/v2c	Read/Write allowed	Only “Read” is allowed (Cannot be changed)
SNMPv3 Write User Security Level	auth-password/ priv-password	Cannot be changed to disable authentication system
Network Setting Clear (PageScope Web Connection)	Allow	Restrict
Administrator password change via network (Page-Scope Web Connection)	Allow	Restrict (Cannot be changed)
Registering and Changing Addresses by user	Allow	Restrict (Cannot be changed)
Public User Access	Restrict	Restrict (Cannot be changed)
Print Data Capture	Allowed	Prohibited (Cannot be changed)
Release Time Settings	5 min.	When the time setting is between 1 and 4 min., 5 min. replaces the setting and takes effect. The lower limit of settable range is 5 minutes. (Cannot be set to less than 5 minutes)
Secure print user box preview	Image display/List display/document detail display	Only list display available before password authentication (Mode 2)
Image Log Transfer Settings	NO	NO (Cannot be changed)
Internet ISW (Service Mode)	Disabled	Disabled (Cannot be changed)
Operation Ban release time (Service Mode)	5 min.	When the time setting is between 1 and 4 min., 5 min. replaces the setting and takes effect. The lower limit of settable range is 5 minutes. (Cannot be set to less than 5 minutes)

10.6.88 Security Settings-HDD Settings

A. Check HDD Capacity

(1) Use

- To display the used space capacity, total space capacity, and the remaining capacity of the hard disk.
- To check the capacity and the status of use of the hard disk.

B. Overwrite HDD Data

- When the image becomes unnecessary, temporary data overwrite function will write meaningless data over all area where images are stored, and destroy the image data itself.
  The structure of image data will be destroyed so that in case HDD is stolen, the remaining data included in the image data will not leak. Using the HDD lock password function or HDD encryption function along with this function will provide a high level of security which prevents images of great importance from leaking. It is recommended to use HDD lock password function or HDD encryption function along with this function for those who require high level of security.

(1) Use

- To set whether or not to use overwrite temporary data.
- To set overwriting method to use temporary data overwrite function.
- To use when making temporary data overwrite function valid.
- All data are temporarily written into HDD during PC print, copier print, scanning and fax transmission. When the operation is complete, perform overwriting to the area data were once written in HDD in order to enhance security.
- To change overwriting method to use temporary data overwrite function.
  Mode 1: To overwrite 0x00 one time.
  Mode 2: Overwrite 0x00 → overwrite 0xff → overwrite 0x61 →validation

- "Encryption Priority/Overwrite Priority" can be selected.
  Encryption Priority : When the encryption word is set, the security level of the data will be enhanced before writing to HDD. When erasing data, they will all be converted into encryption data before overwritten. Therefore, overwriting will be executed with the value besides the value specified by the selected mode.
  Overwrite Priority : Standard encryption method will be applied to data written to HDD even when the encryption word is set, so overwriting and erasing will be performed without fail using the specified value in the selected mode.
  It is used for performing the overwriting and erasing according to the HDD data erase standard.

NOTE

- **It is necessary to make HDD format when encryption priority/overwrite priority setting is changed.**

(2) Procedure

- The default setting is OFF.

ON "OFF"

When selecting [ON], select an overwrite method.

- The default setting is Mode 1.

"Mode 1" Mode 2

NOTE

- **[OFF] cannot be selected when the following setting is set to "ON."**
  [Administrator Settings] → [Security Setting] → [Enhanced Security Mode]

- The default setting is Encryption Priority.

"Encryption Priority" Overwrite Priority

C. Overwrite All Data

(1) Use

- To delete the whole data in the hard disk by overwriting.
- To initialize the area of use for the user stored in NVRAM.
- To use when disposing of the hard disk.
- Select the overwriting method from Mode 1 through 8.

  Mode 1 : It overwrites 0x00 once.

  Mode 2 : Overwrites with random numbers → overwrites with random numbers → overwrites with 0x00

  Mode 3 : Overwrites with 0x00 → overwrites with 0xff → overwrites with random numbers → verifies

  Mode 4 : Overwrites with random numbers → overwrites with 0x00 → overwrites with 0xff

  Mode 5 : Overwrites with 0x00 → overwrites with 0xff → overwrites with 0x00 → overwrites with 0xff

  Mode 6 : Overwrites with 0x00 → overwrites with 0xff → overwrites with 0x00 → overwrites with 0xff → overwrites with 0x00 → overwrites with 0xff → overwrites with random numbers

  Mode 7 : Overwrites with 0x00 → overwrites with 0xff → overwrites with 0x00 → overwrites with 0xff → overwrites with 0x00 → overwrites with 0xff → overwrites with 0xaa

  Mode 8 : Overwrites with 0x00 → overwrites with 0xff → overwrites with 0x00 → overwrites with 0xff → overwrites with 0x00 → overwrites with 0xff → overwrites with 0xaa → verifies

(2) Procedure

1. Touch [Overwrite All Data].
2. Touch [Overwrite].
3. Touch [Yes] on the check screen.
4. Touch [YES] on the confirmation screen.
5. Turn off the main power switch and turn it on again more than 10 seconds after.

D. HDD Lock Password

(1) Use

- To set the lock password for the hard disk.
- To enter, change or delete the lock password for the hard disk.

(2) Procedure

1. Touch [HDD Lock Password].
2. Enter the password (20 characters) on the on-screen keyboard, and touch [OK].

NOTE

- **Password using only a single letter is not acceptable.**
- **Don't forget the password. When the password is forgotten, the replacement of hard disk is needed.**

3. Re-enter the password to confirm.
4. Turn OFF the main power switch and turn it ON again more than 10 seconds after.

E. Format HDD

(1) Use

- To conduct logical formatting of HDD.

NOTE

- **It is subject to logical formatting here, therefore if starting with physical formatting, follow as [Service Mode] → [State Confirmation] → [Memory/HDD Adj.] → [HDD Format].**

(2) Procedure

1. Touch [HDD Formatting].
2. Select [Yes] on the confirmation screen and touch [OK].
3. Turn off the main power switch and turn it on again more than 10 seconds after.

F. HDD Encryption Setting

(1) Use

- **To re-set encrypting word due to exchange of NVRAM board or etc.**

NOTE

- **This setting is available only when the optional security kit SC-503 is mounted.**
- **HDD formatting is required after this setting. Therefore it is necessary to retrieve certain data from HDD in advance.**
  The following data will be lost after HDD formatting.
  ① Address data
  ② Authentication data : Authentication mode, user authentication setting, account track setting
  ③ Box setting data : Box and text in the box, setting information of each box, box for fax
  ④ Job history, fax transmission history

(2) Procedure

1. Press [HDD Encryption Setting].
2. Enter encryption key (20 characters) with the keyboard on the operation panel and press [OK].

NOTE

- **Double-byte and identical characters are not acceptable.**

3. Turn off the main power switch and turn it on again more than 10 seconds after.
4. Open [Administrator Settings] and conduct HDD formatting according to the instruction appeared on the panel.
5. Turn off the main power switch and turn it on again more than 10 seconds after.

10.6.89 Security Settings-Function Management Setting

A. Each Function Setting

- It will be displayed only when the following setting shows that Vendor 2 or Management Device is mounted.
  [Service Mode] → [Billing Setting] → [Management Function Choice]

(1) Use

- To set whether to use management function for each item of [Copy], [PC print], [Send data] and [Print others].
  [Print others] is not displayed when vendor is connected.
- [ON] for [Send Data] will not be displayed when the optional image controller (IC-409) is mounted.
- To set whether to use Management function for each item of [Copy], [PC print], [Send data] and [Print others].
  [Print others] is not displayed when Vendor is connected.

(2) Procedure

- The default setting is ON.

"ON" OFF Prohibit

B. Max Copy Set

- It will be displayed only when the following setting shows that vendor is mounted.
  [Service Mode] → [Billing Setting] → [Management Function Choice]

(1) Use

- To set the upper limit of the number of copy or PC print when management function has been set.

(2) Procedure

- The default setting is 9999.

1 to "9999"

C. Network Function Usage Settings

(1) Use

- To set whether to use network function or not when management function has been set.
- Not to use the network function whose counter is difficult to be managed when management function has been set.
- The following are target functions.
  PC-FAX transmission/Using the HDD TWAIN driver to view and retrieve documents in user boxes/Using PageScope Box Operator to view and retrieve documents in user boxes/Using PageScope Scan Direct to retrieve documents in user boxes/Using PageScope Job Spooler to view and retrieve documents in user boxes/Box operations using the PageScope Web Connection

(2) Procedure

- The default setting is ON.

"ON" OFF

NOTE

- **However, when the vendor or management device setting in the Service Mode is set, this setting is set to OFF.**
  Exercise caution since it will stay in "OFF" setting even when "unset" is selected on vendor or management device setting in Service Mode later.

D. Authentication Time Setting

- It will be displayed only when the following setting shows that authentication device 1 is mounted.
  [Service Mode] → [Billing Setting] → [Management Function Choice]

(1) Use

- To set the authentication mode when authentication device is used.
- To change the authentication mode when authentication device is used.
  Keep Card : Authentication is available leaving the card in the given place when making authentication with the device.
  Touch and Print : Card is placed only when authentication is made with the device and if the card is left for a given time (authentication reset time) the authentication setting is reset.
- When selecting “Touch and Print”, authentication reset is set after completing the job in [Authentication Time].

(2) Procedure

<Authentication Method>

- The default setting is Touch and Print.

Keep Card “Touch and Print”

<Authentication Time>

- The default setting is 1 min.

1 to 30 min.

<Authentication Log-out When Job is Completed>

- The default setting is Yes.

“Yes” No

10.6.90 Security Settings-Stamp Settings

A. Apply Stamps

(1) Use

- Selects whether to add a stamp to documents when jobs are printed or fax/scanned data is sent.

(2) Procedure

- The each default setting is Do Not Apply.

Apply “Do Not Apply”

- Touch “Apply” to make stamp settings independently for print and transmission modes.

B. Delete Registered Stamp

(1) Use

- Deletes registered stamps, and copy protect/repeat stamps.

(2) Procedure

1. Touch [Delete Registered Stamp].
2. Select [Stamp] or [Copy Protect/Stamp Repeat].
3. Select [Yes] on the confirmation screen and touch [OK] to delete the registered stamps.

10.6.91 Security Settings-Image Log Transfer Settings

- It will be displayed when the following setting shows that switch No.63 is set to [01] at HEX assignment.
  [Service Mode] → [System 2] → [Software Switch Setting]

A. Use

- Specifies whether to transfer the input or output image data to the server using whenever MFP inputs or outputs image data.
  Makes the settings of the WebDAV server or the FTP server where image data are transferred.
- Use this settings to keep logs of input and output image data for security purpose.

B. Procedure

- The each default setting is No.

Yes “No”

- When selecting [Yes], make the settings of the server where data are transferred.
- Set the following item.

<WebDAV Server setting>

- Host Name, File Path, User Name, Password, Port Number, Proxy, SSL Setting.

<FTP Server setting>

- Host Name, File Path, User Name, Password, Port Number, PASV, and Proxy.

10.6.92 Security Settings-Driver Password Encryption Setting

A. Use

- To set whether to use the factory default encryption word or user-defined one as a common key that encrypts a password used for a print job.
  User-Defined : Sets an encryption word. Enter an encryption word of 20 letters.
  Use Factory Default: Uses the factory default encryption word (undisclosed predefined encryption key).

NOTE

- **When selecting [User-Defined], set an encryption key being consisted of the same letters in the printer driver. If the encryption word set in the main body differs from the encryption key set in the printer driver, different encrypted passwords are created and printing cannot be made.**
- **The use of OpenAPI allows an encryption key to be obtained from the main body.**

B. Procedure

- The default setting is Use Factory Default.

User-Defined “Use Factory Default”

10.6.93 License Settings-Get Request Code

A. Use

- To display and print a request code and serial number used to activate i-Option.
- Used to confirm the request code and serial number.

B. Procedure

1. Touch [Get Request Code], and [Yes].
2. A serial number and request code are issued.
3. By touching [Print], the serial number and request code are printable.

10.6.94 License Settings-Install License

- This is displayed only when the additional memory included in the optional upgrade kit UK-203 is installed.

A. Use

- To allow administrator to activate functions provided by i-Option.
- Used when administrator activates functions provided by i-Option.
- By selecting a desired function and entering the corresponding license code, the function can be activated.
- By making settings in [Service Mode] → [Billing Setting], CE can also activate functions provided by i-Option.

B. Procedure

1. Touch [Install License].
2. Touch [Select Function].
3. Select i-Option function to be activated, and touch [Yes].
4. Touch [OK].
5. Touch [License Code].
6. Enter the license code that was issued in the license management server using the key board on the control panel, and touch [OK].
7. Touch [Install] key.
8. Confirm the message, select [Yes], and touch [OK].
9. Turn OFF and ON the main power switch.

10.6.95 License Settings-List of Enabled Functions

- This is displayed only when the additional memory included in the optional upgrade kit UK-203 is mounted.

A. Use

- To display currently activated functions.
- Used to check the functions that are activated now.

10.6.96 OpenAPI Authentication Management-Restriction Code Setting

- It will be displayed in bizhub C652/C552 machines where the function version is version 2 or later and in all bizhub C452 machines.

A. Use

- These are communication settings for the application which is developed by the third vendor.
  Do not set or change these settings without vendor's instructions.

10.7 Banner Printing

- It will not be displayed when the optional finisher FS-526 is mounted.
- It will not be displayed when the following setting shows that vendor is mounted.
  [Service Mode] → [Billing Setting] → [Management Function Choice]

A. Use

- To shift to the banner printing mode.
- To use when printing on the long size paper.

B. Procedure

1. Set the long size paper to the bypass tray.
2. Touch [Banner Printing], and touch [ON].
3. Send the job for the long paper print.
4. Touch [Finish] to finish banner printing mode.

NOTE

- **Only PC print is available for the long paper print.**
- **Normal job cannot be accepted during banner printing mode.**

10.8 My Panel Settings

- This is displayed only when a registered user is logging in after user authentication. However, this is not displayed when both management device 2 and user authentication are used.

A. Use

- To make various settings about My Panel.
- To customize My Panel screen for individual registered users.
- Items that can be set are as follows:
  Language Setting, Measurement Unit Setting, Copier Settings, Scan/Fax Settings, Color Selection Setting, Main Menu Settings, and Initial Screen Setting

B. Procedure

1. Touch [My Panel Settings].
2. Touch a key that represents a desirable item and change its settings.

NOTE

- **Registering, editing, and deleting My Panel settings are allowed only when logging in as a registered user.**
- **When My Panel is not customized, the settings for MFP take effect in the three of the control panel settings, Language setting, Measurement unit setting, and Color selection setting.**
- **Depending on the functions provided by each MFP and the optional device configuration, not all My Panel settings may not take effect.**

10.9 Device Information

- It will be displayed in bizhub C652/C552 machines where the function version is version 2 or later and in all bizhub C452 machines.

A. Use

- To display the function version of the firmware installed in MFP and the IP address.

B. Procedure

- Touch [Device Information] to check the function version and IP address.

<About function version>

Function version / Model	Version 1	Version 2
bizhub C652/C552	Initial firmware	Function enhancement 1
bizhub C452	-	Initial firmware
bizhub C360/C280/C220	-	Initial firmware

Blank Page

11. ADJUSTMENT ITEM LIST

Adjustment/setting items				No	Replace paper feed roller	Replace separation roller assy	Change marketing area	Install LCT	Replace CCD unit	Replace mirror unit	Replace IU	Replace transfer belt unit	Replace PH unit
Service Mode	Machine	Printer Area	Print Positioning: Leading Edge	1									(4)
			Print Positioning: Side Edge	2				❍					(5)
			Paper Feed Direction Adj.	3					(1)	(4)			
		Scan Area	Image position: Leading Edge	4									
			Image position: Side Edge	5					(3)				
			Cross Direction Adjustment	6					(2)				
			Feed Direction Adjustment	7						(5)			
		Org. Detecting Sensor Adj.		8			❍						
		Skew adjustment	Skew adjustment	9									(1)
			Skew adjustment reset	10									(2)
		LD adjustment	LD delay adjust.	11									(3)
			LD lightness balance adjust.	12									
	Touch Panel Adjust			13									
	State Confir-mation	Memory/ HDD Adjust	HDD R/W Check	14									
			HDD Format	15									
			Conversion Up/Down	16									
			Up/Down Version	17									
		Table Number		18									
	Firmware Version			19									
	System 1/2	Re-entry of setting values		20									
		Serial Number		21									
	Counter	Life	Counter Clear	22	❍	❍							
	Image Process Adjustment		Gradation Adjust	23							❍	❍	
	ADF		Read Pos Adj *1	24						(3)			
	Enhanced Security		NVRAM Data Backup	25									
Re-entry of Utility settings				26									
Re-entry of Enhanced Security settings				27									
Parallel adjustment of scanner/mirrors carriage				28						(1)			
Positioning scanner unit				29						(2)			
Scanner motor belt adjustment				30									
Original glass moving unit height adjustment				31									
F/W upgrading				32									
Installation of original size sensor				33									
Remounting of NVRAM (MFP board)				34									
Replace transfer belt unit				35									

- This table shows the adjustment items that are required when a part of the machine has been replaced. Priority order, if applicable, during the adjustment procedures is indicated by the corresponding number in the parentheses.

No	Replace original size detection sensor	Wind scanner drive cables	Replace scanner motor	Replace scanner assy	Replace scanner home sensor	Replace original glass moving unit	Replace glass step sheet	Replace printer control board	Replace MFP board	Replace image processing board	Replace original glass	Replace IDC/registration sensor/F,R	Replace hard disk	Add key counter	Execute initialize	Execute add. option	Execute F/W update	Add fax board
1																		
2																		
3																		
4											(2)							
5					❍						(1)							
6																		
7		(5)	(2)	(3)														
8	(3)																	
9																		
10																		
11																		
12																		
13															(6)			
14													(2)					
15													(1)					
16																	❍	
17																	❍	
18	(2)														(2)			
19																❍	❍	
20															(4)			
21															(3)			
22																		
23									(3)									
24		(4)		(2)		(2)	❍											
25									(4)									
26															(1)			
27														❍	(5)			
28		(2)																
29		(3)		(1)														
30		(1)	(1)															
31						(1)												
32								❍	(2)	❍								❍
33	(1)																	
34									(1)									
35												❍						

12. SERVICE MODE

12.1 List of service mode

* The function tree is shown to comply with the format displayed on the screen.

Service Mode			Ref. Page
Machine	Color alignment Adjustment		P.461
	Fusing Temperature		P.462
	Fusing Transport Speed		P.463
	Org. Size Detecting Sensor Adj.		P.464
	Printer Area	Leading Edge Adjustment	P.465
		Centering	P.466
		Leading Edge Adj. (Duplex Side 2)	P.467
		Centering (Duplex 2nd Side)	P.468
		Paper Feed Direction Adj.	P.469
	Scan Area	Image Position: Leading Edge	P.471
		Image Position: Side Edge	P.472
		Cross Direction Adjustment	P.473
		Feed Direction Adjustment	P.474
	Printer Resist Loop		P.475
	Color Registration Adjustment		P.476
	Skew adjustment	Skew adjustment	P.477
		Skew adjustment reset	P.477
	LD adjustment	LD delay adjust.	P.478
		LD lightness balance adjust.	P.479
	Manual Bypass Tray Adjustment		P.480
	Lead Edge Erase Adjustment		P.480
	Thick Paper Mode		P.480
	Split Line Prior Detection		P.481
	Non-Image Area Erase Check		P.481
Firmware Version			P.482
Imaging Process Adjustment	Gradation Adjust		P.482
	Transfer Belt	Cleaning Bias	P.483
		Auto Cleaning	P.484
	D Max Density	Copy	P.484
		Printer	
	TCR Level Setting		P.485
	Background Voltage Margin		P.485
	Transfer Output Fine Adjustment	Primary transfer adj.	P.486
		Secondary transfer adj.	P.487
	Stabilizer	Stabilization Only	P.487
		Initialize+Image Stabilization	P.488

Service Mode				Ref. Page
Imaging Process Adjustment	Thick Paper Density Adjustment	Thick 1,1+		P.488
		Thick 2,3,4		
	Paper separation adjustment			P.489
	TCR Toner Supply			P.489
	Monochrome Density Adjustment			P.490
	Development AC Voltage Choice			P.490
CS Remote Care				P.491
System 1	Marketing Area			P.523
	Tel/Fax Number			P.524
	Serial Number			P.524
	No Sleep			P.525
	Foolscap Size Setting			P.525
	Original Size Detection			P.525
	Install Date			P.526
	Initialization	Clear All Data		P.526
		Clear Individual Data	Copy Program Data	P.526
			Address Registration Data	P.527
			Fax Setting Data	P.527
			All History Data	P.527
			Network Setting Data	P.527
		System Error Clear		P.528
	Charging CH cleaning	Cleaning		P.528
		Self-Cleaning		P.528
	Trouble Isolation			P.529
	Post card transfer table			P.529
1	Change Warm Up Time			P.529
	Machine State LED Setting			P.530
System 2	HDD			P.531
	Image Controller Setting			P.531
	Option Board Status			P.532
	Consumable Life Reminder			P.532
	Unit Change			P.533
	Software Switch Setting			P.533
	Scan Calibration			P.535
	LCC size setting			P.535
	LCT Paper Size Setting	A4LCT		P.535
		A3LCT		
	Line Mag Setting			P.536
	Data Capture			P.536
	Split Line Detect. Setting			P.538
	Stamp			P.539

Service Mode			Ref. Page
System 2	Network Fax Settings		P.540
	Image Stabilization Setting		P.540
	User Paper Settings		P.541
	Coverage Rate Screen		P.542
	JAM Code Display Setting		P.542
	Boot up Screen		P.542
	Install Data		P.543
1	Bluetooth Settings		P.544
Counter	Life		P.544
	Service Call		P.546
	Section Service Call		P.546
	Warning		P.546
	Maintenance		P.547
	Service Total		P.547
	Counter Of Each Mode		P.548
	Service Call History (Data)		P.548
	ADF Paper Pages		P.548
	Paper Jam History		P.548
	Fax Connection Error		P.548
	Split Line Counter		P.549
	Parts Counter (Fixed)		P.549
	Jam		P.551
	Section JAM		P.551
	Counter Reset		—
List Output	Machine Management List		P.551
	Adjustments List		P.551
	Parameter List		P.551
	Service Parameter		P.551
	Protocol Trace	Last	P.551
		Error	
	Fax Setting List		P.551
	Fax Analysis List		P.552
State Confirmation	Sensor Check		P.552
	Table Number		P.573
	Level History1		P.574
	Level History2		P.574
	Temp. & Humidity		P.574
	CCD Check		P.575

Service Mode			Ref. Page
State Confirmation	Memory/HDD Adj.	Memory Check	P.575
		Compress / Decompression Check	P.576
		Memory Bus Check	P.576
		DSC Bus Check	P.576
		HDD R/W Check	P.577
		HDD Format	P.577
	Memory/HDD State		P.577
	Color Regist		P.578
	IU Lot No.		P.578
	Adjustment Data List		P.578
Test Mode	Gradation Pattern		P.579
	Halftone Pattern		P.580
	Lattice Pattern		P.581
	Solid Pattern		P.582
	Color Sample		P.582
	8 Color Solid Pattern		P.583
	CMM Pattern		P.583
	Running Mode		P.584
	Fax Test		P.584
ADF	Original Stop Position		P.585
	Registration Loop Adj.		P.586
	Auto Stop Position Adjustment		P.587
	Paper Passage		P.589
	Sensor Check		P.590
	Original Tray Width		P.592
	Read Pos Adj		P.593
	Feed Zoom	Orig. Feed Zoom Ad	P.595
		Auto Adjust	P.595
	Scanning Light Adjustment		P.596
	Mixed Original Size adjustment		P.596
FAX *1	Line 1 *1	Modem/NCU *1	P.596
		NetWork *1	
		System *1	
		Fax File Format *1	
		Communication *1	
		List Output *1	
		Function Parameter *1	
		Initialization *1	
	Line 2 *2	Modem/NCU *2	
		Network *2	
		Communication *2	
		Initialization *2	

Service Mode			Ref. Page
Finisher *3	FS-FN adjustment *3	Center Staple Position *3	P.597
1		Half-Fold Position *4 *5	P.598
1		Punch Vertical Position *9	P.599
1		Punch Horizontal Position *10	P.600
1		Punch edge detection *9	P.601
1		Punch vertical position (Z-fold) *7	P.602
1		Punch horizontal position (Z-fold) *7	P.603
1		Punch regist adj. (Z-fold) *7	P.603
1		Punch Resist Loop Size (Body) *10	P.604
1		Punch Resist Loop Size (PI) *6 *9	P.604
1		1st Z-Fold position *7	P.605
1		2nd Z-Fold position *7	
1		Tri-Fold Position *4	P.606
1		Center-staple pitch adjustment *4 *5	P.607
1		PI Size Detection *6	P.607
1		Post Inserter Adjustment *6	P.608
		finisher check *3	P.608
		Load Data *3	P.611
1		Side position adjustment *4 *5	P.612
1		Punch unit edge detection *7	P.612
	Staple option setting		P.613
	Punch Option setting		P.613
	Fold power of pages restrict.		P.614
1	Job Separator *8		P.614
Internet ISW	Internet ISW Set		P.615
	HTTP Setting *11		P.615
	FTP Setting *11		P.616
	Forwarding Access Setting *11		P.617
	Download *11		P.618

*1: It will be displayed only when the optional fax kit (FK-502) line 1 is mounted.
*2: It will be displayed only when the optional fax kit (FK-502) line 2 is mounted.
1 *3: It will be displayed only when the optional finisher (FS-526 or FS-527) is mounted.
1 *4: It will be displayed only when the optional saddle stitcher (SD-508) is mounted.
1 *5: It will be displayed only when the optional saddle stitcher (SD-509) is mounted.
1 *6: It will be displayed only when the optional post inserter (PI-505) is mounted.
1 *7: It will be displayed only when the optional Z folding unit (ZU-606) is mounted.
1 *8: It will be displayed only when the optional job separator (JS-504) is mounted.
1 *9: It will be displayed only when the optional punch kit (PK-516) is mounted.
1 *10: It will be displayed only when the optional punch kit (PK-516 or PK-517) is mounted.
1 *11: It will be displayed only when the [Internet ISW Set] is set to “ON.”

12.2 Starting/Exiting

12.2.1 Starting procedure

NOTE

- **Ensure appropriate security for Service Mode function setting procedures. They should NEVER be shown to any unauthorized person not involved with service jobs.**

A. Procedure

1. Press the Utility/Counter key.
2. Touch [Details] on meter count display.
3. Press the following keys in this order.; Stop → 0 → 0 → Stop → 0 → 1

NOTE

- **When selecting [CE Authentication] under [Enhanced Security] available from Service Mode, authentication by CE password is necessary.**
  Enter the 8 digits CE password, and touch [END].
  (The initial setting for CE password is "92729272.")
- **When the following setting is set to "ON", CE password authentication is necessary; [Administrator Settings] → [Security Settings] → [Enhanced Security Mode]**
- **If a wrong CE password is entered, re-enter the right password. The machine will not enter Service Mode unless the CE password is entered correctly. To return to the Basic screen, turn OFF the sub power switch and turn it ON again.**
  When the following setting is set to "Mode 2", operation will be prohibited since it indicates authentication failure by failing to enter the correct CE password within the specified number of times.
  if the access lock is activated, the lock release timer starts to operate by input the Stop → 0 → 9 → 3 → 1 → 7 in [Meter Count] → [Check Details] → [Coverage Rate] after the main power switch is turned OFF and On. When the timer reaches the time specified in this setting, the access lock is released.
- **The service code entered is displayed as "∗."**

4. The Service Mode menu will appear.

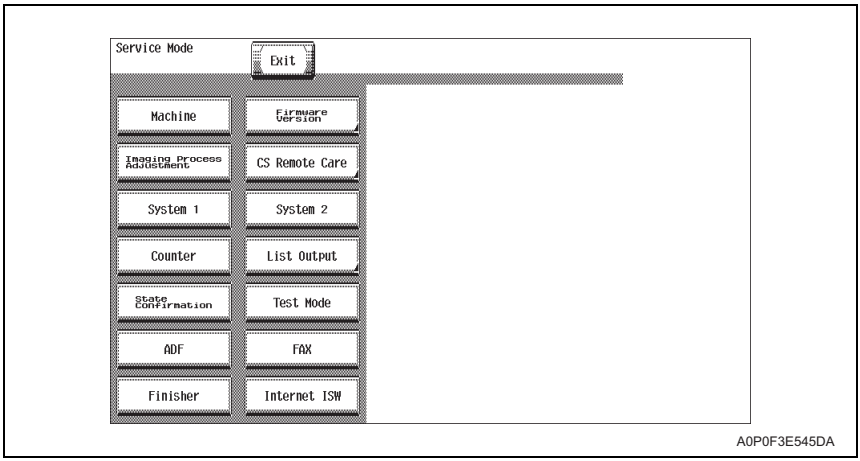

NOTE
- **Be sure to change the CE password from its default value.**
- **For the procedure to change the CE password, see the Enhanced Security.**
See P.619

B. Exiting procedure
- Touch the [Exit] key.

12.3 Date/Time Input mode

A. Use
- This mode is used to set time-of-day and date.

B. Procedure
1. Call the Service Mode to the screen.
2. Press the following keys in this order.
   Stop → 1 → 1 → 4 → 4 → Clear
3. Enter year, month, day, hour, and minute, in that order, from 10-key pad.
   (Year 4 digits → Month 2 digits → Day 2 digits → Hour 2 digits → Minute 2 digits)

NOTE
- **Before entering date and time, press the Clear key to delete the present time from the place where data and time is entered.**
- **When setting the month, day, hour, or minute, enter "0" first if the data one digit.**

4. Make sure that correct figures have been entered and then touch [Entry].
5. Touch [END] to return to the Service Mode.

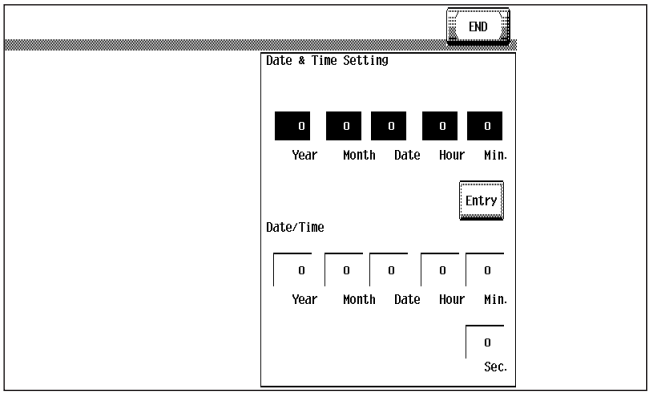

A00JF3E537DA

12.4 Machine

12.4.1 Color Alignment Adjustment

A. Use

- To adjust color shift if color shift is found at the trailing edge of either plain paper or thick paper by the comparison of originals and their output.
- Uses this function when color shift occurs at the trailing edge of images.
- Able to make a setting on a process speed basis independently for each paper type of plain paper (color), thick 1/1+, and thick 2/3/4.

B. Procedure

- The default setting is 0.

1. Call the Service Mode to the screen.
2. Touch these keys in this order: [Machine] → [Color Registration Adjustment].
3. Load manual bypass tray with A3/11 x 17 or A4/8 $^{1}/_{2}$ x 11 plain paper.
4. Select the paper type to be adjusted.
5. Press the Start key.
6. Using the printed test pattern, check color shift in the sub scan direction on both leading and trailing edge areas. If color shift is found only around the trailing edge, perform the following adjustment.
   (If color shift is found on both areas, perform [Color Registration Adjustment].
7. Using the [+] / [-] key, change the setting value as necessary.
   If the cross deviates in the direction of A, increase the setting. (Decrease paper transport speed.)
   If the cross deviates in the direction of B, decrease the setting. (Increase paper transport speed.)
8. Produce another test pattern and make sure that there is no deviation.

Check Procedure

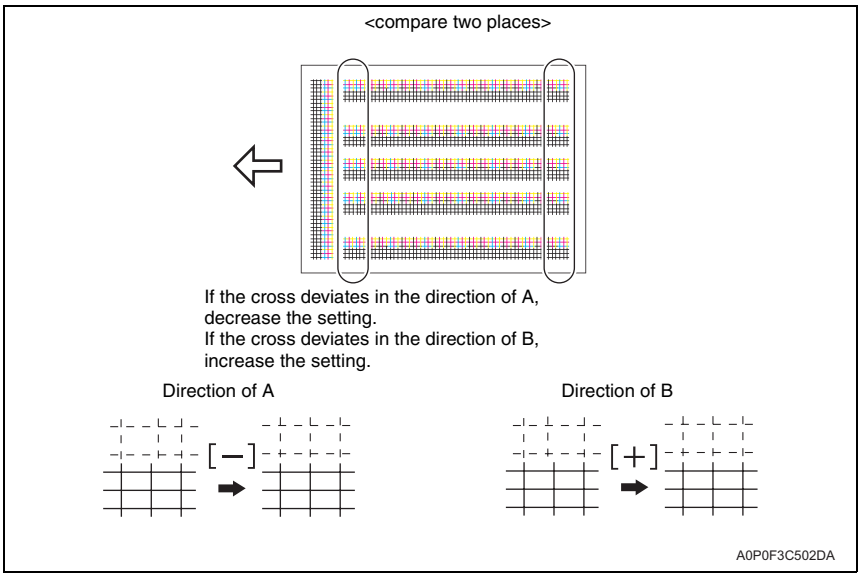

12.4.2 Fusing Temperature

A. Use

- To adjust individually the temperature of the heating roller and the fusing pressure roller for each type of paper, thereby coping with varying fusing performance under changing environmental conditions.
- When fusing performance is poor, or wax streak or offset occurs when the type of paper is changed or environmental conditions change.
- Use when the curling of the paper due to the paper type or environmental change occurred, or when the paper jam, as well as stapling or folding position error occurred due to the curling of the paper.
- By setting the temperature higher (+), gloss of print can be improved.
- By setting the temperature lower (-), exit roller mark can be reduced.

<Adjustment range>

Paper type	Setting range	step
Plain Paper	-20 °C to +5 °C	5 °C
OHP Film	-20 °C to +5 °C	5 °C
Thick 1	-20 °C to +5 °C	5 °C
Thick 1+	-20 °C to +5 °C	5 °C
Thick 2	-20 °C to +5 °C	5 °C
Thick 3	-20 °C to +5 °C	5 °C
Thick 4	-20 °C to +5 °C	5 °C
Post.	-20 °C to +5 °C	5 °C
Enve.	-5 °C to +5 °C	5 °C

B. Procedure

NOTE

- **To adjust the fusing temperature, adjust on the heating side first. If the further adjustment is necessary, adjust on the pressure side.**

1. Call the Service Mode to the screen.
2. Touch these keys in this order: [Machine] → [Fusing Temperature].
3. Select the paper type and fusing roller type (Heater Roller or Pressure).
4. Enter the new setting from the [+] / [-] key.
   If fusing performance is poor, increase the setting.
   If wax streaks occur, decrease the setting.
   If offset is poor, decrease the setting.
   If curling of the paper occurs, decrease the setting.
5. Touch [END] to validate the adjustment value.
6. Return to the basic screen.
7. Output two or three test printing and check to see whether the image has any problem.
8. Make the adjustment for each type of paper.

12.4.3 Fusing Transport Speed

A. Use

- To adjust the speed of the fusing motor so as to match the fusing speed with transport speed.
- Brush effect or blurred image is evident as a result of changes in environmental conditions or degraded durability.

B. Procedure

1. Call the Service Mode to the screen.
2. Touch these keys in this order: [Machine] → [Fusing Transport Speed].
3. Select the transport speed, at which the brush effect or blurred image has occurred.

<bizhub C652>

Transport speed	Paper Setting
310 mm/s	Plain paper: black (High speed)
240 mm/s	Plain paper: black (Middle speed), color (Not glossy)
155 mm/s	Thick 1, Thick 1+: black/color
120 mm/s	Plain paper: color (Glossy) Thick 2, Thick 3, Thick 4, envelope, postcard: black/color OHP film: black

<bizhub C552>

Transport speed	Paper Setting
264 mm/s	Plain paper: black (High speed)
216 mm/s	Plain paper: black (Middle speed), color (Not glossy)
132 mm/s	Thick 1, Thick 1+: black/color
108 mm/s	Plain paper: color (Glossy) Thick 2, Thick 3, Thick 4, envelope, postcard: black/color OHP film: black

△1 <bizhub C452>

Transport speed	Paper Setting
216 mm/s	Plain paper: black, color (Not glossy)
132 mm/s	Thick 1, Thick 1+: black/color
108 mm/s	Plain paper: color (Glossy) Thick 2, Thick 3, Thick 4, envelope, postcard: black/color OHP film: black

4. Enter the new setting from the 10-key pad.
   If brush effect is evident, vary the setting value and check for image.
   If a blurred image occurs, decrease the setting.
5. Touch [END] to validate the adjustment value.
6. Check the print image for any image problem.

12.4.4 Org. Size Detecting Sensor Adj.

A. Use

- To automatically adjust the original detection distance for the original size detection sensor/1.
- To display if the original size detection sensor/2 is mounted.
- When the sensor is replaced with a new one.
- When an optional sensor has been added.
- When an erroneous original size detection is made.
- When the marketing area setting is changed.

B. Procedure

1. Place a blank sheet of A3 or 11 x 17 paper on the original glass and lower the original cover.
2. Call the Service Mode to the screen.
3. Touch these keys in this order: [Machine] → [Org. Size Detecting Sensor Adj.].
4. Press the Start key.

If the adjustment has been successfully made, it completes the adjustment procedure.
If the adjustment has turned out to be unsuccessful, check the optional original size sensors for correct installation and change the defective sensor or harness.

12.4.5 Printer Area-Leading Edge Adjustment

A. Use

- To vary the print start position in the sub scan direction for each of different paper types. (To adjust the timing where paper is sent out from the timing roller)
- The PH unit has been replaced.
- The paper type has been changed.
- The print image deviates in the sub scan direction.
- A faint image occurs on the leading edge of the image.
- This setting can be made independently for plain paper, Thick 1/1+, Thick 2, Thick 3, Thick 4, OHP transparencies, and envelopes.

B. Procedure

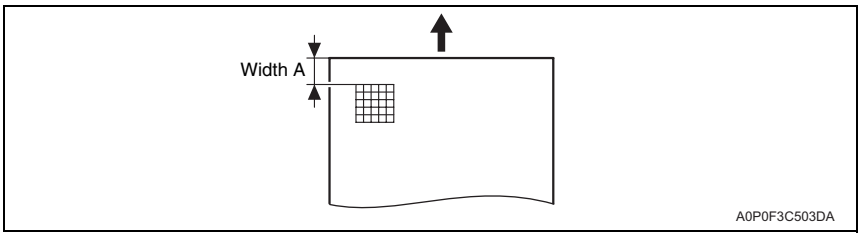

- Width A on the test pattern produced should fall within the following range.

Specifications: 4.2 ± 0.5 mm

1. Place A3 paper on the manual bypass tray.
2. Call the Service Mode to the screen.
3. Touch [Machine] → [Printer Area] → [Leading Edge Adjustment].
4. Select the [Plain Paper].
5. Press the Start key to let the machine produce a test print.
6. Check the dimension of width A on the test print.
7. If width A falls outside the specified range, change the setting using the [+] / [-] key.
   If width A is longer than the specifications, make the setting value smaller than the current one.
   If width A is shorter than the specifications, make the setting value greater than the current one.
8. Press the Start key to let the machine produce a test print.
9. Check the dimension of width A on the test print.
10. If width A is outside the specified range, change the setting again and make a check again.
11. If width A falls within the specified range, touch [END].
12. Following the same procedure, adjust for Thick 1 to 3, OHP film, and Enve.

12.4.6 Printer Area-Centering

A. Use

- To vary the print start position in the main scan direction for each paper source.
- The PH Unit has been replaced.
- A paper feed unit has been added.
- The print image deviates in the main scan direction.

B. Procedure

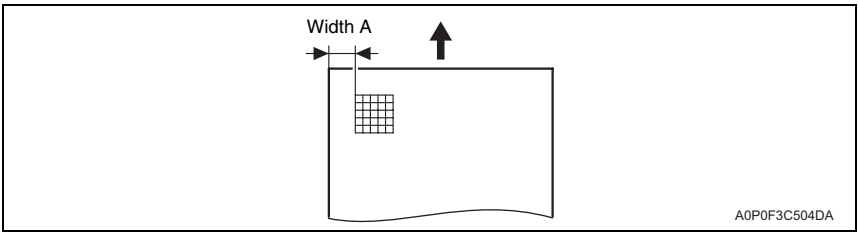

- Width A on the test pattern produced should fall within the following range.

Specifications: 3.0 ± 0.5 mm

1. Call the Service Mode to the screen.
2. Touch [Machine] → [Printer Area] → [Centering].
3. Select the paper source to be adjusted.
4. Press the Start key to let the machine produce a test print.
5. Check the dimension of width A on the test print.
6. If width A falls outside the specified range, change the setting using the [+] / [-] key.
   If width A is longer than the specifications, make the setting value smaller than the current one.
   If width A is shorter than the specifications, make the setting value greater than the current one.
7. Press the Start key to let the machine produce a test print.
8. Check the dimension of width A on the test print.
9. If width A is outside the specified range, change the setting again and make a check again.
10. If width A falls within the specified range, touch [END].
11. Following the same procedure, adjust for all other paper sources.
    (Use A4 or 8 $^{1}/_{2}$ x 11 plain paper for the bypass.)

12.4.7 Printer Area-Leading Edge Adj. (Duplex Side 2)

A. Use

- For individual types of paper, this function allows the adjustment of the image write start position in the sub scan direction on the 2nd side of duplex printing.
- This adjustment is made when the image on the 2nd side of paper deviates from the original position in the sub scan direction.
- This adjustment can be made independently for each of plain paper, thick paper 1/1+, thick paper 2, and thick paper 3.

B. Procedure

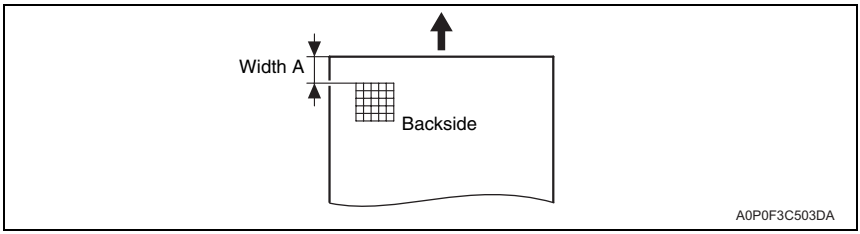

- Width A on the test pattern produced should fall within the following range.
- For measurement, use the image produced on the backside of the test pattern.

Specifications: 4.2 ± 0.5 mm

1. Place A3 paper on the tray.
2. Call the Service Mode to the screen.
3. Touch [Machine] → [Printer Area] → [Leading Edge Adj. (Duplex Side 2)].
4. Select the [Plain Paper].
5. Press the Start key to let the machine produce a test print.
6. Check the dimension of width A on the test print.
7. If width A falls outside the specified range, change the setting using the [+] / [-] key.
   If width A is longer than the specifications, make the setting value smaller than the current one.
   If width A is shorter than the specifications, make the setting value greater than the current one.
8. Press the Start key to let the machine produce a test print.
9. Check the dimension of width A on the test print.
10. If width A is outside the specified range, change the setting again and make a check again.
11. If width A falls within the specified range, touch [END].
12. Following the same procedure, adjust for Thick paper.

12.4.8 Printer Area-Centering (Duplex 2nd Side)

A. Use

- To vary the print start position in the main scan direction for each paper source in the 2-Sided mode.
- The image on the backside of the 2-sided copy deviates in the main scan direction.

B. Procedure

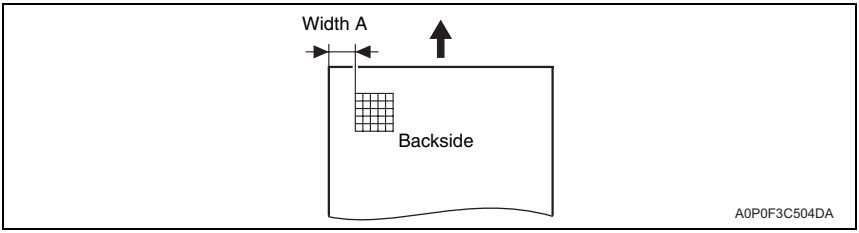

- Width A on the test pattern produced should fall within the following range.
- For measurement, use the image produced on the backside of the test pattern.

Specifications: 3.0 ± 0.5 mm

1. Call the Service Mode to the screen.
2. Touch [Machine] → [Printer Area] → [Centering (Duplex 2nd Side)].
3. Select the paper source to be adjusted.
4. Press the Start key to let the machine produce a test print.
5. Check the dimension of width A on the test print.
6. If width A falls outside the specified range, change the setting using the [+] / [-] key.
   If width A is longer than the specifications, make the setting value smaller than the current one.
   If width A is shorter than the specifications, make the setting value greater than the current one.
7. Press the Start key to let the machine produce a test print.
8. Check the dimension of width A on the test print on the backside of the copy.
9. If width A is outside the specified range, change the setting again and make a check again.
10. If width A falls within the specified range, touch [END].
11. Following the same procedure, adjust for all other paper sources.
    (Use A4 or 8 $^{1}/_{2}$ x 11 plain paper for the manual bypass tray.)

12.4.9 Printer Area-Paper Feed Direction Adj.

A. Use

- To synchronize the paper transport speed with the image writing speed.
- Feed Direction Adjustment becomes necessary.
- The print image on the copy distorts (stretched, shrunk).
- When the print image on the copy is stretched in the sub scan direction.
- This setting can be made independently for plain paper, Thick 1/1+, Thick 2, Thick 3, and Thick 4.

B. Procedure

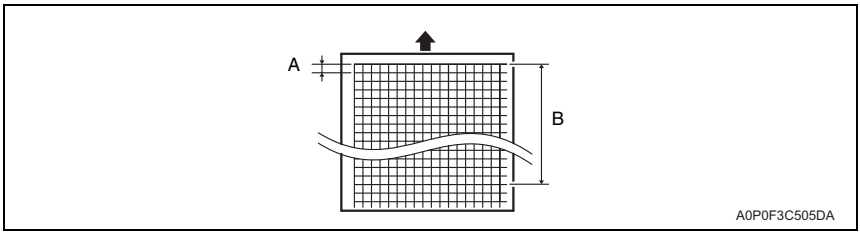

- Width A and width B on the test pattern produced should fall within the following ranges.
  Width A: equivalent to one grid
  Width B: equivalent to 48 grids

Specifications
A: 7.9 to 8.3
B: 389.1 to 392.1

1. Load manual bypass tray with A3 or 11 x 17 plain paper.
2. Call the Service Mode to the screen.
3. Touch [Machine] → [Printer Area] → [Paper Feed Direction Adj.].
4. Select [Plain Paper].
5. Press the Start key to let the machine produce a test print.
6. Check width A (equivalent to one grid) and width B (equivalent to 48 grids) on the test print.
7. Touch these keys in this order: [Machine] → [Printer Area] → [Paper Feed Direction Adj].
8. If width of A or B falls outside the specified range, change the setting using the [+]/[-] keys.
   If width A or B is longer than the specifications, make the setting value smaller than the current one.
   If width A or B is shorter than the specifications, make the setting value greater than the current one.
9. Press the Start key to let the machine produce a test print again.
10. Check width A and width B on the test print.
11. If width A or B falls outside the specified range, change the setting value and make a check again.
12. If width A or B falls within the specified range, touch [END].
13. Following the same procedure, adjust for thick paper.

12.4.10 Scan Area

- Use the following color chart for the adjustment of the scanner section.
- If the color chart is not available, a scale may be used instead.

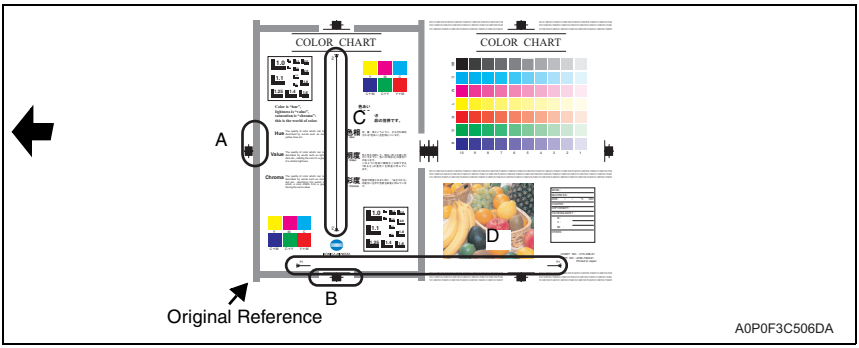

Adjustment item	Ref.
A: Image Position: Leading Edge	P.471
B: Image Position: Side Edge	P.472
C: Cross Direction Adjustment	P.473
D: Feed Direction Adjustment	P.474

12.4.11 Scan Area-Image Position: Leading Edge

A. Use

- To adjust variations in mounting accuracy and sensitivity of the scanner home sensor and in mounting accuracy of the original width scale by varying the scan start position in the main scan direction.
- When the original glass is replaced.
- When the original width scale is replaced.

B. Procedure

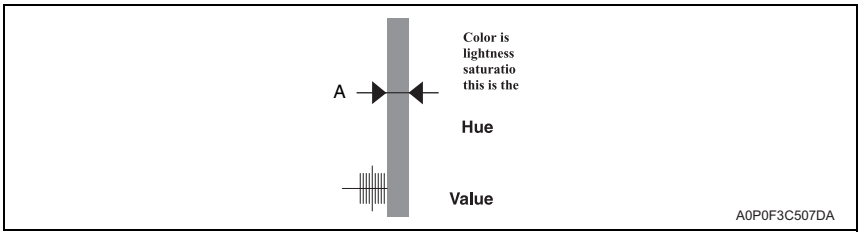

- B width on the color chart and one on the test print are measured and adjusted so that the difference of A width satisfies the specifications shown below.
- An adjustment must have been completed correctly of [Leading Edge Adjustment] of [Printer Area].

Specifications
A: ± 0.5 mm (10 ± 0.5 mm if a scale is used)

1. Call the Service Mode to the screen.
2. Touch these keys in this order: [Machine] → [Scan Area] → [Image Position: Leading Edge].
3. Position the color chart correctly so that the original reference point is aligned with the scale.
4. Press the Start key to make a copy.
5. Check point A on the test print.
6. If width A on the test print falls outside the specified range, change the setting using the [+] / [-] key.
   If the test print is less than the specified length, increase the setting value.
   If the test print exceeds the specified length, decrease the setting value.
7. Press the Start key to make another test print.
8. Check the image on the test print to see if the specifications are met.
9. Make adjustments until the specifications are met.

12.4.12 Scan Area-Image Position: Side Edge

A. Use

- To adjust part-to-part variations in accuracy of scanner parts and their mounting accuracy by varying the scan start position in the main scan direction.
- When the CCD unit is replaced.
- When the original glass is replaced.
- The scanner home sensor has been replaced.

B. Procedure

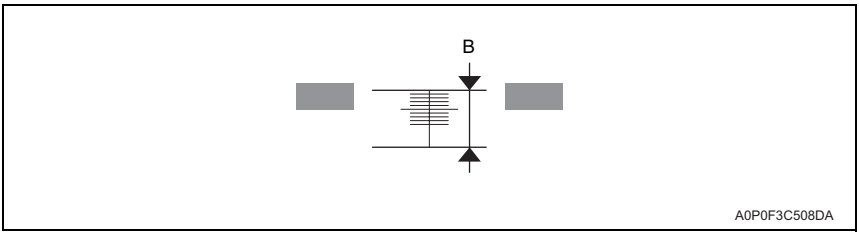

- A width on the color chart and one on the test print are measured and adjusted so that the difference of B width satisfies the specifications shown below.
- An adjustment must have been completed correctly of [Centering] of [Printer Area].

Specifications
B: ± 1.0 mm

1. Call the Service Mode to the screen.
2. Touch these keys in this order: [Machine] → [Scan Area] → [Image Position: Side Edge].
3. Position the color chart correctly so that the original reference point is aligned with the scale.
4. Press the Start key to make a copy.
5. Check point B on the image of the test print.
6. If the test print falls outside the specified range, change the setting using the [+] / [-] key.
   If the test print is less than the specified length, increase the setting value.
   If the test print exceeds the specified length, decrease the setting value.
7. Press the Start key to make a test print.
8. Check point B of the image on the test print to see if the specifications are met.
9. Make adjustments until the specifications are met.

12.4.13 Scan Area-Cross Direction Adjustment

A. Use

- To adjust the zoom ratio in the main scan direction for the scanner section.
- The CCD unit has been replaced.

B. Procedure

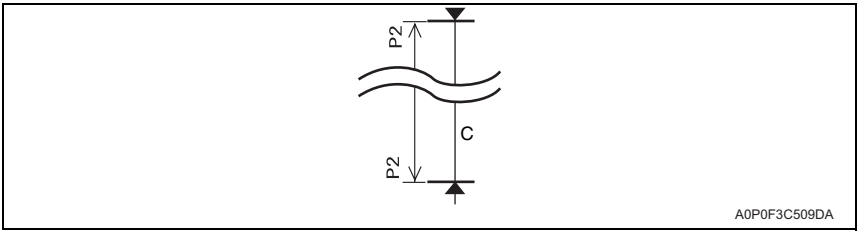

- Measure C width on the color chart and on the test print, and adjust the gap to be within the following specification.
- An adjustment must have been completed correctly of “Paper Feed Direction Adj.” of [Printer Area].

Specifications
C: ± 1.0 mm

* Standard size when using a scale: 200.0 mm

1. Call the Service Mode to the screen.
2. Touch these keys in this order: [Machine] → [Scan Area] → [Cross Direction Adjustment].
3. Position the color chart correctly so that the original reference point is aligned with the scale.
4. Press the Start key to make a test print.
5. Check the C width on the image of the copy.
6. If the test print falls outside the specified range, change the setting using the [+] / [-] key.
   If the C width on the test print is less than one on color chart, increase the setting.
   If the C width on the test print exceeds one on color chart, decrease the setting.
7. Press the Start key to make another test print.
8. Check the image on the test print to see if the specifications are met.
9. Make adjustments until the specifications are met.

12.4.14 Scan Area-Feed Direction Adjustment

A. Use

- To adjust the zoom ratio in the sub scan direction for the scanner section.
- The exposure has been replaced.
- The scanner motor has been replaced.
- The scanner drive cables have been replaced.

B. Procedure

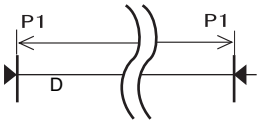

A0P0F3C510DA

- Measure D width on the color chart and on the test print, and adjust the gap to be within the following specification.
- An adjustment must have been completed correctly of “Paper Feed Direction Adj.” of [Printer Area].

Specifications
D: ± 1.5 mm

* Standard size when using a scale: 200.0 mm

1. Call the Service Mode to the screen.
2. Touch these keys in this order: [Machine] → [Scan Area] → [Feed Direction Adjustment].
3. Position the color chart correctly so that the original reference point is aligned with the scale.
4. Press the Start key to make a test print.
5. Check the D width on the image of the test print.
6. If the test print falls outside the specified range, change the setting using the [+] / [-] key.
   If the D width on the test print is less than one on color chart, increase the setting.
   If the D width on the test print exceeds one on color chart, decrease the setting.
7. Press the Start key to make another test print.
8. Check the image on the test print to see if the specifications are met.
9. Make adjustments until the specifications are met.

12.4.15 Printer Resist Loop

A. Use

- To set the correction value of the paper loop length for each process speed of tray 1 to tray 4, LCT, bypass, and duplex.
- To adjust the length of the loop formed in paper before the registration rollers.
- Use “Paper Passage” for paper passage check.
- When a paper skew occurs.
- When a paper misfeed occurs.

B. Procedure

- The adjustable range is different depending on paper source and processing speed.

<bizhub C652>

	Tray 1/2	Tray 3/4 LCT	Manual	Duplex
310 mm/sec	-5 to +5	—	-5 to +5	-5 to +5
240 mm/sec	-5 to +5	—	-5 to +5	-5 to +5
155 mm/sec	-9 to +9	—	-9 to +9	-9 to +9
120 mm/sec	-10 to +10	—	-10 to +10	-10 to +10
420 mm/sec	—	0 to +3	—	—
216 mm/sec	—	-5 to +5	—	—

<bizhub C552>

	Tray 1/2	Tray 3/4 LCT	Manual	Duplex
264 mm/sec	-5 to +5	—	-5 to +5	-5 to +5
216 mm/sec	-5 to +5	-5 to +5	-5 to +5	-5 to +5
132 mm/sec	-9 to +9	—	-9 to +9	-9 to +9
108 mm/sec	-10 to +10	—	-10 to +10	-10 to +10
350 mm/sec	—	-3 to +3	—	—

⚠1 <bizhub C452>

	Tray 1/2	Tray 3/4 LCT	Manual	Duplex
216 mm/sec	-5 to +5	-5 to +5	-5 to +5	-5 to +5
132 mm/sec	-9 to +9	—	-9 to +9	-9 to +9
108 mm/sec	-10 to +10	—	-10 to +10	-10 to +10
350 mm/sec	—	-3 to +3	—	—

1. Call the Service Mode to the screen.
2. Touch these keys in this order: [Machine] → [Printer Resist Loop].
3. Select a paper source and a processing speed where the settings are made by touching the corresponding keys.
4. Enter the new setting from the 10-key pad.
   To decrease the loop amount: Increase the setting value
   To increase the loop amount: Decrease the setting value

12.4.16 Color Registration Adjustment-Cyan, Magenta, Yellow

A. Use

- To adjust color shift if there is any when comparing the original with copy of the plain or thick paper.
- To correct any color shift.
- This setting can be made independently for plain paper, Thick 1/1+, Thick 2, Thick 3, and Thick 4.

B. Procedure

1. Call the Service Mode to the screen.
2. Touch these keys in this order: [Machine] → [Color Registration Adjustment].
3. Load manual bypass tray with A3/11 x 17 or A4/8 $^{1}/_{2}$ x 11 plain paper.
4. Press the Start key.
5. On the test pattern produced, check for deviation between the black line and the line of each color at positions X and Y.
6. Select the color to be adjusted.
7. Using the [+] / [-] key, change the setting value as necessary. (At this time, only the line of the selected color moves.)
   If the cross deviates in the direction of A, increase the setting.
   If the cross deviates in the direction of B, decrease the setting.
8. Produce another test pattern and make sure that there is no deviation.

Check Procedure

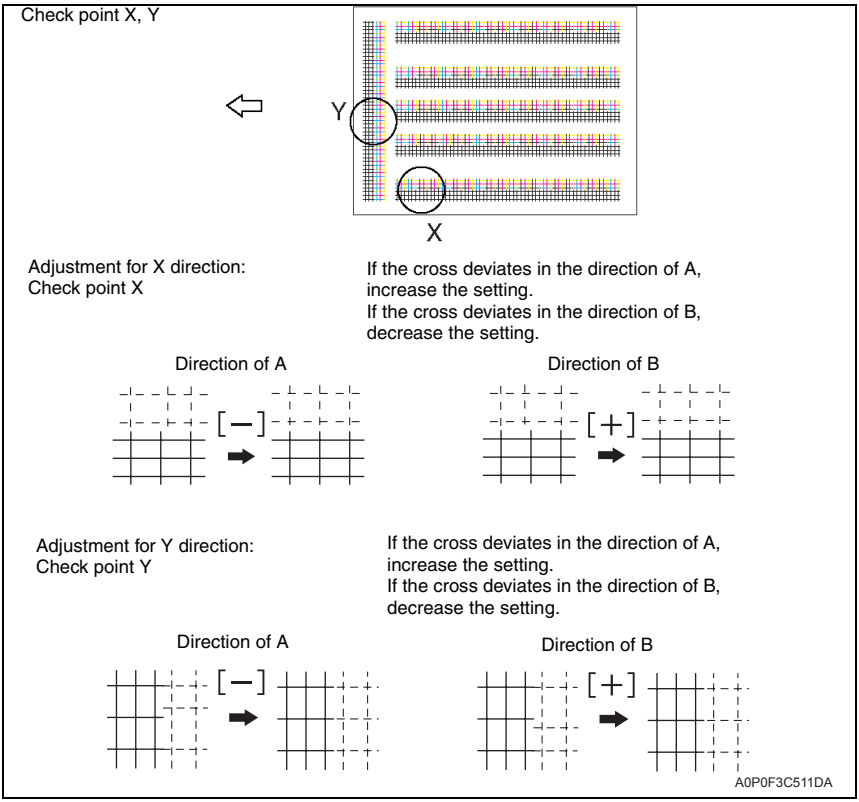

12.4.17 Skew adjustment-Skew adjustment

A. Use

- This function allows you to set the default position of the skew correction motor.
- Adjusts and sets a value that is used as an individual skew correction motor's reference position for skew correction control.
- This setting is made after the PH unit is replaced.
- Use this function when the information of the motor's position setting is lost due to the replacement of the service EEPROM board or other reasons.

B. Procedure

1. Call the Service Mode to the screen.
2. Touch these keys in this order:
   [Machine] → [Skew adjustment] → [Skew adjustment].
3. Select the color to be set.
4. Enter the skew value described on the new PH unit with the 10-key pad.
5. Touch [OK].
6. Proceed to [Skew adjustment reset].

12.4.18 Skew adjustment-Skew adjustment reset

A. Use

- Returns the skew correction motor to the default position and clear the backup copies of the cumulative skew amount.
- After PH unit replacement, perform [Skew adjustment] and then execute this function.
- Use this feature when the information of the skew correction position that is backed up in the machine is lost by replacing the service EEPROM board or other reasons.
- After addressing the alert code P-14 and completing an action to the problem, perform this function.
- Use this function when the current skew correction motor's position becomes unavailable due to the skew adjustment interrupted by the door being opened or the main power switch being turned OFF.

B. Procedure

1. Call the Service Mode to the screen.
2. Touch these keys in this order:
   [Machine] → [Skew adjustment] → [Skew adjustment reset].
3. Touch the start key and execute the skew adjustment reset.

NOTE

- **After replacing the PH unit or service EEPROM board, set the initial position of the skew correction as follows: [Machine] → [Skew adjustment] → [Skew adjustment]. After completing [Skew adjustment], perform [Skew adjustment reset].**
- **After the skew adjustment reset is complete, be sure to perform [Initialize + Image Stabilization].**

(1) Skew adjustment result on the panel

- Skew adjustment result is provided in [Skew Adjust Value], which is selected as follows: [Service Mode] → [State Confirmation] → [Color Regist].

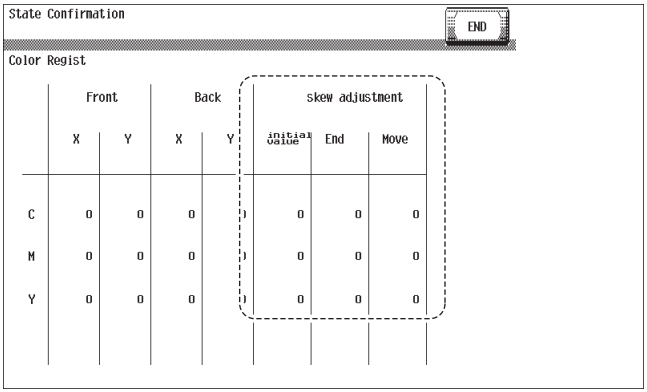

A0P0F3E546DA

Skew Adjust Value	Description
Initial	• Displays the initial position of the skew correction set in [Skew adjustment] which is selected as follows: [Service Mode] → [Machine] → [Skew adjustment] → [Skew adjustment]. The initial position is same as the one set upon shipment.
End	• Displays the final skew correction position that was obtained after finishing the image stabilization control.
Move	• Displays how much skew adjust value changed in the previous image stabilization control.

12.4.19 LD adjustment-LD delay adjust.

A. Use

- LD delay adjust sets adjustment values by adjusting LD light emission delay amount. (Values to be entered are described on the side of the PH unit.)
- This setting is made after the PH unit is replaced.
- This adjustment is made when the service EEPROM board is replaced or the backup of information on position settings is lost.

B. Procedure

1. Call the Service Mode to the screen.
2. Touch these keys in this order:
   [Machine] → [LD adjustment] → [LD delay adjust.].
3. Select the color to be set.
4. Enter the values described on the side of the PH unit using 10-key pad.
5. Touch [OK].

12.4.20 LD adjustment-LD lightness balance adjust.

A. Use

- This function adjusts the LD lightness balance between the two LDs to correct the difference of LD lightness between the LDs.
- This setting is made after the PH unit or the service EEPROM board is replaced.
- This adjustment is made to prevent uneven density in highlighted halftone area processed with error diffusion being caused by inappropriate laser intensity.

B. Procedure

1. Call the Service Mode to the screen.
2. Touch these keys in this order:
   [Machine] → [LD adjustment] → [LD lightness balance adjust.].
3. Select [For adjustment] and press Start key.
4. The test print includes seven rows of patterns produced with different levels of LD2 light intensity towards LD1.

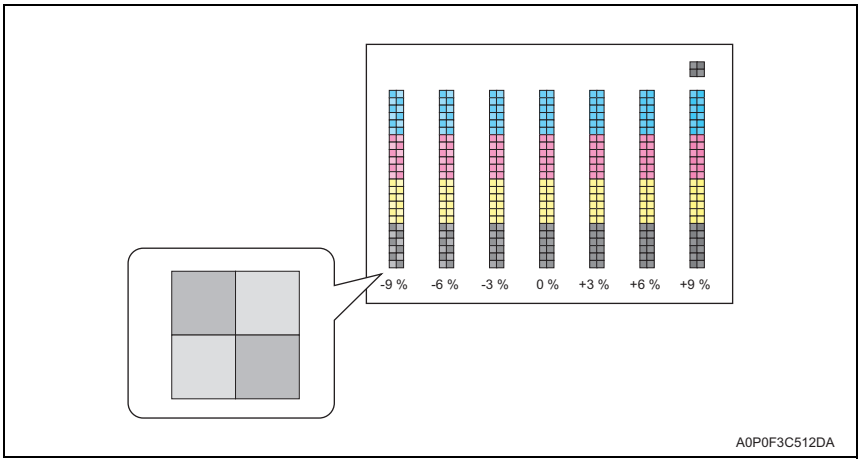

5. Three squares each made up by four small squares are printed with the different four colors. The two small squares diagonal to each other are printed using the same LD. Depending on individual print timing, it is decided that which pair of small squares corresponds to which LD.
   The pair of small squares where image density changes corresponds to LD2.
6. From the test pattern, select the pattern where the least density difference appears between LD1 and LD2 for each color.
7. Enter the adjustment value corresponding to the pattern you selected (see the above illustration) or a value close to the adjustment value using the ten key pads on the panel.
8. Select [For effect confirmat.] and press Start key.
9. Check that LD2 small squares have no image noise of woodgrain.
10. Touch [OK].

12.4.21 Manual Bypass Tray Adjustment

A. Use

- To set the maximum width and the minimum width for the bypass paper width detection resistor of the manual bypass guide.
- Use when the bypass paper width detection resistor of the manual bypass guide has been changed.
- Use when a false paper size is displayed when the manual bypass is used.

B. Procedure

1. Call the Service Mode to the screen.
2. Touch these keys in this order: [Machine] → [Manual Bypass Tray Adjustment].
3. Touch [Max. Width].
4. Load the bypass tray with paper having a width of 297 mm.
5. Press the Start key and check that the results are [OK].
6. Touch [Min. Width.].
7. Load the bypass tray with paper having a width of 100 mm.
8. Press the Start key and check that the results are [OK].

✻ Make the adjustment again if the results are [NG].

12.4.22 Lead Edge Erase Adjustment

A. Use

- To set the leading edge erase amount of the paper.
- Upon user requests, it is possible to specify the void area where image is not printed along the leading edge.

B. Procedure

- The default setting is 4 mm.

"4 mm" 5 mm 7 mm

NOTE

- **When "4 mm" is selected, 4.2 mm is the actual amount to be erased in print based on the control system of the machine.**

12.4.23 Thick Paper Mode

A. Use

- For thick paper, the paper interval can be changed.
- To resolve image failure (black streaks) in the main scan direction due to the vibrations created when the trailing edge of the preceding paper is passing by the timing roller.
- To reduce the effect of vibrations on image quality by widening paper interval.
  Image Quality : Operates with the paper interval longer than normal.
  Productivity : Operates with the paper interval closer to the normal

B. Procedure

- The default setting is Productivity.

Image Quality "Productivity"

12.4.24 Split Line Prior Detection

A. Use

- To check the stain on the ADF original glass and display the result.
- To manually perform the pre-detection of the stain which is normally conducted when the main/sub power switch is turned ON, recovering from the sleep/low power mode, etc.
- [Split Line Prior Detection] will be conducted with the detection level set by the following setting.
  [Service Mode] → [System 2] → [Split Line Detect. Setting] → [Prior Detection]
  When the above setting is set to “Not Set”, “NG” will be displayed even though the pre-detection is conducted.

B. Procedure

1. Call the Service Mode to the screen.
2. Touch these keys in this order: [Machine] → [Split Line Prior Detection].
3. Press the start key to start the pre-detection.
4. Check to make sure that “OK” is displayed for the result.

✻ When the result says “NG”, clean the glass and check again.

12.4.25 Non-Image Area Erase Check

A. Use

- The non-image area erase function may not work properly under bright light source. Incoming light quantity is checked to verify that the non-image area erase function can work properly under the environment.
- Verification results are shown as follows:
  OK : Works properly.
  NG1 : Works properly. However, data that may interfere with the non-image area erase function was found. This function may not work well with dark original.
  NG2 : Data that may interfere with the non-image area erase function was found.
- Use this feature when installing a new machine or reinstalling a machine in a new place.
- Use this feature when the non-image area erase function fails to work properly due to the changes of the surrounding environment at the installation site.

B. Procedure

1. Call the Service Mode to the screen.
2. Touch these keys in this order: [Machine] → [Non-Image Area Erase Check].
3. Press the Start key to start a check.

NOTE

- **Before the check, make sure that the ADF is completely opened. In addition, make sure that no scratch or stain exists on the original glass.**

4. Check the result is “OK.”

✻ If the check result is “NG1” or “NG2,” reinstall the machine in another place or adjust the orientation of the machine to reduce light incidence on the machine. Then, perform the check again.

12.5 Firmware Version

A. Use

- To check the firmware version.
- Use when the firmware is upgraded.
- When the firmware is upgraded or PWB is replaced.

B. Procedure

1. Call the Service Mode to the screen.
2. Touch [Firmware Version].
3. Select the appropriate key from 1 to 3 to check the Firmware Version.

12.6 Imaging Process Adjustment

12.6.1 Gradation Adjust

- It will not be displayed when the following setting is set to “ON”.
  [Service Mode] → [Image Process Adjustment] → [Development AC Voltage Choice]

A. Use

- To make an automatic adjustment of gradation based on the test pattern produced and the readings taken by the scanner.
- Color reproduction performance becomes poor.
- The imaging unit, drum unit or developing unit has been replaced.
- The image transfer belt unit has been replaced.

✻ The Adj. Values of “Dark” and “Highlight” shown on the gradation adjust screen represent how much corrections are made to produce an ideal image output. Conv. Value shows the difference from the ideal image density.

✻ The closer the Conv. Value to 0, the more ideal the image.

Stablizer : Before gradation adjust, perform image stabilization.
Print : Priority is image gradation reproducibility (priority on gradation) as well as reproducibility of characters and lines (priority on resolution).
Copy : Priority is to increase the number of images that can be stored in the memory (priority on compression). The adjustment conforms to FEET (non-screen).

B. Procedure

1. Call the Service Mode to the screen.
2. Touch these keys in this order: [Image Process Adjustment] → [Gradation Adjust].
3. Touch [Stabilizer] and the Start key to perform image stabilization.

NOTE

- **Before executing Gradation adjust, be sure to perform Stabilizer.**

4. Select Print or Copy and select the paper size on which test pattern is printed.
5. Press the Start key to let the machine produce a test pattern.

NOTE

- **When the image stabilization performed in step 3 is NG, the Start key stops functioning.**
- **When one of the alert codes, P-5, P-6, P-7, P-8, P-9, and P-28 is on the screen and [Printer] is selected, the Start key stops functioning.**

6. Place the test pattern produced on the original glass.

NOTE

- **Depending on the size of the test pattern, it is set in a different position. Set the test pattern according to the instructions displayed on the control panel.**

7. Place ten blank sheets of paper on the test pattern and lower the original cover.
8. Press the Start key. (The machine will then start scanning the test pattern.)
9. Touch [OK] and repeat steps from 4 through 8 twice (a total of three times).
10. Touch [Gradation Adjust] to display the Adj. Values and Conv. Values of each color (C, M, Y and K) for Dark and Highlight.
11. Use the following procedures to check the Conv. Value.

Dark: 0 ± 100 and Highlight: 0 ± 60: It completes the adjustment procedure.
If neither Dark nor Highlight falls outside the ranges specified above: Perform steps from 4 to 8.

NOTE

- **If the convergence falls within the specified range after the second Gradation Adjustment, further adjustment may not be necessary.**

- If a fault is detected, “0” is displayed for all values. In that case, after turning off the main power switch, turn it on again more than 10 seconds after and then make the gradation adjustment again.
- If either dark or highlight still remains outside the specified ranges perform D Max Density.
- If a total of four sequences of gradation adjust do not bring the values into the specified range, check the image.
- If the image is faulty, perform the troubleshooting procedures for image problems.

12.6.2 Transfer Belt-Cleaning Bias

A. Use

- To set the level of transfer belt cleaning bias independently for each process speed.
- When the image pattern is not completely removed, it strengthen the transfer belt cleaning bias in order to make the cleaner more effective.
- For each processing speed, positive and negative output values can be set.

B. Procedure

- The each default setting is 0.

-5 to +5 (step:1 *)

*: One step corresponds to 5 μA.

12.6.3 Transfer Belt-Auto Cleaning

A. Use

- To set whether to perform the long regular transfer belt cleaning operation (approx. 30 sec).
- The long cleaning operation (approx. 30 seconds) can be used to take more effective measures against toner filming on the surface of the transfer belt.

  Enable : Performs the long cleaning operation (approx. 30 sec) after the normal regular cleaning operations (approx. 10 sec.) which are performed nine times.

  Disable : Performs only the normal regular operations (approx. 10 sec) but not the long cleaning operation (approx. 30 sec.).

B. Procedure

- The default setting is Disable.

Enable “Disable”

12.6.4 D Max Density

A. Use

- To adjust gradation, color, and image density to target reproduction levels by varying the maximum amount of toner sticking to paper through auxiliary manual fine-adjustment of gamma of each color after gradation adjust.
- An image quality problem is not corrected even after gradation adjust has been run.

B. Procedure

- The default setting is 0.

-10 to +10 (step: 1 *)

*: 1 step corresponds to 0.03 in density difference.

1. Call the Service Mode to the screen.
2. Touch these keys in this order: [Imaging Process Adjustment] → [D Max Density].
3. Select [COPY] or [Printer].
4. Select the color to be adjusted.
5. Enter the new setting from the 10-key pad or [+/-].
   To increase the maximum amount of toner sticking, increase the setting value.
   To decrease the maximum amount of toner sticking, decrease the setting value.
6. Touch [END] to return to the [Process] menu screen.
7. Touch [Stabilizer].
8. Touch [Stabilizer Mode].
9. Press the Start key to validate the adjustment value.
10. Check the print image for any image problem.

NOTE

- **If the setting value has been changed, be sure to run an image stabilization sequence to make valid the new value.**

12.6.5 TCR Level Setting

A. Use

- To adjust the T/C control level when an abnormal image density occurs as a result of a change in the amount of charge of toner and carrier due to an environmental change.
- Use when T/C changes due to changes in environmental conditions of the user site.

B. Procedure

- The default setting is 0.

-3 to +3

(1 step in positive (+) direction: 0.5 % increase, 1 step in negative (-) direction: 0.5 % decrease, Center value 0 corresponds to 7 % T/C ratio.)

1. Call the Service Mode to the screen.
2. Touch these keys in this order: [Process] → [TCR Level Setting].
3. Select the color to be adjusted.
4. Enter the new setting from the 10-Key pad and [+/-] key.
   To increase T/C, increase the setting value.
   To decrease T/C, decrease the setting value.
5. Touch [END] to validate the adjustment value.
6. Check the print image for any image problem.

12.6.6 Background Voltage Margin

A. Use

- To adjust the highlight portion (fog level) to the target reproduction level by making an auxiliary manual fine-adjustment of γ of each color after gradation adjust.
- Use when a foggy background occurs due to a printer problem.

B. Procedure

- The default setting is 0.

-5 to +5 (step: 1)

1. Call the Service Mode to the screen.
2. Touch these keys in this order: [Imaging Process Adjustment] → [Background Voltage Margin].
3. Select the color to be adjusted.
4. Enter the new setting from the 10-key pad.
   To make the background level foggier, decrease the setting value.
   To make the background level less foggy, increase the setting value.
5. Touch [END] to return to the [Image Adjust] menu screen.
6. Touch [Stabilizer].
7. Touch [Stabilization Only].
8. Press the Start key to validate the adjustment value.
9. Check the print image for any image problem.

NOTE

- **If the setting value has been changed, be sure to run an image stabilization sequence to make valid the new value.**

12.6.7 Transfer Output Fine Adjustment-Primary transfer adj.

A. Use

- Adjust the output value for the 1st image transfer voltage.
- To use when white spots appeared.

B. Procedure

- The default setting is 0.

-8 to +7 (step: 1)

*1 step is equivalent to 2μA.

1. Call the Service Mode to the screen.
2. Select [Test Mode] → [Halftone Pattern] to output the red or green test pattern.
See P.580
3. When the test pattern image has white spots, adjust with the following procedure.
4. Touch these keys in this order: [Imaging Process Adjustment] → [Transfer Output Fine Adjustment].
5. Select [Primary transfer adj.].
6. Select the color.
7. Change the setting value using the [+] / [-] keys.
Adjust the output value for the 1st image transfer voltage by;
Increasing it: Increase the setting value (white spots will decrease)
Decreasing it: Decrease the setting value
8. Touch [OK] key to set the adjustment value.
Gradually increase the adjustment value to the acceptable white spots level while checking the test pattern.

NOTE

- **PC Drum memory may occur by taking measure to white spots occurred by increasing the 1st image transfer voltage to adjust it.**
Check the image on the test print or the color chart when adjusting.

12.6.8 Transfer Output Fine Adjustment-Secondary transfer adj.

A. Use

- Adjust the 2nd image transfer output (ATVC) on the 1st page and the 2nd page for each paper type.
- To use when the transfer failure at the trailing edge occurs.
- Pressing the [AUTO] key down activates the 2nd image transfer amperage upper and lower limit control. In this case, the machine uses the voltage determined by the auto transfer voltage control and the 2nd image transfer output fine adjustment value does not take effect.

B. Procedure

- The default setting is 0.

-8 to +7 (step: 1)

* 1 step is equivalent to 100 V.

1. Call the Service Mode to the screen.
2. Touch these keys in this order: [Imaging Process Adjustment] → [Transfer Output Fine Adjustment].
3. Select [Secondary transfer adj.].
4. Select the side of the image (1st side or 2nd side), on which the transfer failure occurs.

NOTE

- **For envelopes, OHP film and banner thick, only 1st side can be selected.**

5. Select the paper type with the transfer failure.
6. Enter the new setting from the [+] / [-] keys.
   To increase the ATVC value (in the direction of a foggier image), increase the setting value.
   To decrease the ATVC value (in the direction of a less foggy image), decrease the setting value.
7. Touch [END] to validate the adjustment value.
8. Check the print image for any image problem.

* Press [Auto] to automatically control the 2nd image transfer output without using the 2nd image transfer output fine adjustment value.

12.6.9 Stabilizer-Stabilization Only

A. Use

- The image stabilization sequence is carried out without clearing the historical data of image stabilization control.
- Use if an image problem persists even after gradation adjustment has been executed.
- When [D Max Density] and [Background Voltage Margin] of Service Mode are changed.

B. Procedure

1. Call the Service Mode to the screen.
2. Touch these keys in this order: [Imaging Process Adjustment] → [Stabilization Only].
3. Press the Start key to start Stabilizer.
   The Start key turns red and stays lit up red during the stabilizer sequence.
4. Stabilizer is completed when the Start key turns blue.

12.6.10 Stabilizer-Initialize+Image Stabilization

A. Use

- To carry out an image stabilization sequence after the historical data of image stabilization control has been initialized.
- Use if an image problem persists even after gradation adjustment has been executed.
- Use if tone reproduction and maximum density are faulty even after stabilizer mode has been executed.
- When color shift correction is needed again after the machine maintenance.
- After executing the skew adjustment reset.

B. Procedure

1. Call the Service Mode to the screen.
2. Touch these keys in this order: [Imaging Process Adjustment] → [Stabilizer].
3. Touch [Initialize+Image Stabilization].
4. Press the Start key to start stabilizer.
   The Start key turns red and stays lit up red during the stabilizer sequence.
5. Stabilizer is completed when the Start key turns blue.

12.6.11 Thick Paper Density Adjustment

A. Use

- To fine-adjust density of printed images of each color for thick paper and OHP transparencies. (Only black color adjustable for OHP transparencies)
- To change the density of the printed image for each color with thick paper and OHP transparencies.

B. Procedure

- The default setting is 0.

  -5 to +5 (step: 1)

1. Call the Service Mode to the screen.
2. Touch these keys in this order: [Imaging Process Adjustment] → [Thick Paper Density Adjustment].
3. Select [Thick 1, 1+] or [Thick 2, 3, 4].
4. Touch the Lighter or Darker key for the desired color to correct the image density.
   Light color: Touch the Darker key.
   Dark color: Touch the Lighter key.

12.6.12 Paper separation adjustment

A. Use

- By changing the period between the activation of the timing roller and the 2nd image transfer output, the paper separation position can be adjusted for the 1st and 2nd sides of paper in duplex print that uses thin paper.
- To ensure proper balance between paper separating and image transferring performances by varying the paper separation position applied for duplex printing of thin paper (64 g/ m^2) in hot and humid conditions.

B. Procedure

- The default setting is 0.

-2 mm to +2 mm (step: 0.1 mm)

1. Call the Service Mode to the screen.
2. Touch these keys in this order: [Imaging Process Adjustment] → [Paper separation adjustment].
3. Select [First Side] or [Second Side].
4. Use the [+] or [-] key to change the setting value.
   Priority on paper separation performance: Increase the setting value.
   Priority on image transfer performance: Decrease the setting value.
5. Touch [OK] and determine the adjustment value.
6. Make a print and check the produced image.

12.6.13 TCR Toner Supply

A. Use

- To adjust the set T/C level by replenishing an auxiliary supply of toner when a low ID occurs due to a lowered T/C after large numbers of prints have been made of originals having a high image density.
- When there is a drop in T/C.

B. Procedure

1. Call the Service Mode to the screen.
2. Touch these keys in this order: [Imaging Process Adjustment] → [TCR Toner Supply].
3. Select the color, for which supply of toner is to be replenished.
4. Pressing the Start key will let the machine detect the current toner density and; if the density is lower than a reference value, a toner replenishing sequence and then a developer agitation sequence are run.
5. These sequences are repeated up to a maximum of four times until the toner density reaches the reference value. If the toner density is found to be higher than the reference value, only a developer agitation sequence is carried out.

12.6.14 Monochrome Density Adjustment

A. Use

- To fine-adjust the density of the printed image for a black print.
- To vary the density of the printed image of a black print.

B. Procedure

- The default setting is 0.

-2 to +2 (step: 1)

1. Call the Service Mode to the screen.
2. Touch these keys in this order: [Imaging Process Adjustment] → [Monochrome Density Adjustment].
3. Touch [Lighter] or [Darker] as necessary to correct the image density.
   If the black is light, touch the Darker key.
   If the black is dark, touch the Lighter key.

12.6.15 Development AC Voltage Choice

A. Use

- To change the setting of the development AC voltage.
- When this function is turned ON, it decreases the development AC voltage, thereby preventing voltage leak from occurring.
- Use when patches of white occur in the image in an ambience of low atmospheric pressure, such as in high altitudes.
- If ON is set, the screen doesn't display [Service Mode] → [Imaging Process Adjustment] → [Gradation Adjust] and the Gradation Adjust is not allowed.

B. Procedure

- The default setting is OFF.

ON “OFF”

12.7 CS Remote Care

12.7.1 Outlines

- CS Remote Care enables the machine and the computer at CS Remote Care center to exchange data through telephone/fax line in order to control the machine.
- CS Remote Care enables the machine to call the computer at the center when trouble occurs. It also enables the computer at the center to contact the machine for the necessary data.
- Data which CS Remote Care handles can be divided into the following groups.
  a. Data which show the status of use of the machine such as total count, PM count.
  b. Data which show the abnormal situation on the machine such as where and how often errors occur.
  c. Data on adjustment
  d. Data on setting

NOTE

- **It cannot be set when the following setting is set to "ON".**
  [Administrator Settings] → [Security Settings] → [Enhanced Security Mode]

12.7.2 Setting up the CS Remote Care

NOTE

- **For resetting up the machine which CS Remote Care has already been set up, clear the RAM for CS Remote Care before resetting.**
  See P.509
- **When using a telephone line modem for connection, use the data modem which is based on the ITU-T recommendations V.34/V.32 bis/V.32 and AT command.**

A. Using the tel/fax modem, E-mail

Step	Procedure		
	Using the telephone line modem	Using the Fax line modem *1	Using E-mail
0	Register the device ID to the application at CS Remote Care center. The initial connection is not available unless the device ID is registered.		
1	Connecting the modem Turn the power for the modem OFF. Connect the machine and the modem with a modem cable. Connect the modem and the wall jack with a modular cable. * For connecting the modular cable, see the manual for the modem.	Be sure to remove the telephone line modem when the fax line is used.	Be sure to remove the telephone line modem when e-mail is used.
2	Inputting the ID code *1.* Select [Service Mode] → [CS Remote Care] → [ID Code], and touch [ID Code]. *2.* Input the seven digits ID of the service person, and touch [ID Code] again. See P.506		

<table>
<tr><th rowspan="2">Step</th><th colspan="3">Procedure</th></tr>
<tr><th>Using the telephone line modem</th><th>Using the Fax line modem *1</th><th>Using E-mail</th></tr>
<tr><td>3</td><td colspan="3">Clearing the RAM
3. Select [Service Mode] → [CS Remove Care], and touch [Detail Setting].
4. Touch [RAM Clear].
5. Select Set, and touch [OK].
See P.509</td></tr>
<tr><td>4</td><td>Selecting the CS Remote Care function
Select [Service Mode] → [CS Remove Care] → [System Selection], and touch [Modem].</td><td>Selecting the CS Remote Care function
Select [Service Mode] → [CS Remove Care] → [System Selection], and touch [Fax].</td><td>Selecting the CS Remote Care function
Select [Service Mode] → [CS Remote Care] → [System Setting], and touch [E-Mail 1] or [E-Mail 2].</td></tr>
<tr><td>5</td><td colspan="3">Inputting the ID code
1. Select [Service Mode] → [CS Remote Care] → [ID Code], and touch [ID Code].
2. Input the seven digits ID of the service person, and touch [ID Code] again.
See P.506</td></tr>
<tr><td>6</td><td colspan="3">Setting the date and time for CS Remote Care
1. Select [Service Mode] → [CS Remote Care], and touch [Detail Setting].
2. Touch [Date & Time Setting].
3. Input the date, time and the time zone using the 10-key pad, and touch [Set].
See P.507</td></tr>
<tr><td>7</td><td colspan="3">Setting the Center ID
1. Select [Service Mode] → [CS Remote Care], and touch [Detail Setting].
2. Touch [Machine Setting] → [Center ID], and input the Center ID (five digits).
See P.507</td></tr>
<tr><td>8</td><td colspan="3">Confirm the Device ID
1. Select [Service Mode] → [CS Remote Care], and touch [Detail Setting].
2. Touch [Machine Setting] → [Device ID], and input Device ID (13 digits).

NOTE
• [Device ID] displays the serial number that is entered in [Service Mode]→[System 1]→[Serial Number].</td></tr>
<tr><td>9</td><td colspan="2">Proceed to step 10.</td><td>Encryption setting
1. Select [Service Mode] → [CS Remote Care], and touch [Detail Setting].
2. Touch [Basic Setting] and select either Encryption or No Encryption.

Retransmission interval on e-mail delivery error
• When selecting [E-mail2], set the retransmission interval on e-mail delivery error in software SW setting.
See P.496</td></tr>
<tr><td>10</td><td colspan="2">Setting the telephone number of the Center
1. Select [Service Mode] → [CS Remote Care], and touch [Detail Setting].
2. Touch [Machine Setting] → [Center Telephone Number].
3. Input the telephone number of the center using the 10-keys pad and [P], [T], [W], [-].
See P.507</td><td>Setting the Respond Timeout
1. Select [Service Mode] → [CS Remote Care], and touch [Detail Setting].
2. Touch [Respond Timeout] and enter the response timeout using the 10-key pad.
NOTE
• Under normal conditions, there is no need to change the default setting.
See P.507</td></tr>
</table>

Step	Procedure		
	Using the telephone line modem	Using the Fax line modem *1	Using E-mail
11	Inputting the device telephone number *1.* Select [Service Mode] → [CS Remote Care], and touch [Detail Setting]. *2.* Touch [Machine Setting] → [Device Telephone Number]. *3.* Input the Device telephone number using the 10-key pad and [P], [T], [W], [-]. See P.507		Proceed to step 12.
12	Inputting the AT command for initializing the modem *1.* Select [Service Mode] → [CS Remote Care] → and touch [Detail Setting]. *2.* Touch [AT Command]. *3.* Input AT Command. **NOTE** • **Change this command only when it is necessary. (They do not need to be changed in normal condition.)** • **For details on AT command, see the manual for the modem.** See P.510	Proceed to step 13.	Setting the E-mail address *1.* Select [Service Mode] → [CS Remote Care], and touch [Server Set]. *2.* Touch [Server for RX], and set POP3 server address, POP3 login name, POP3 password and POP3 port number. See P.511 *3.* Press [Receive], and set the E-Mail address, Mail Check, Connection Time Out and APOP Authentication. See P.511 *4.* Touch [Send], and set the SMTP server address, SMTP port number, Connection Time Out, and APOP Authentication. See P.511 *5.* Touch [TX/RX Test], and press Start key to carry out a transmission/reception test. If it fails to exchange messages, see the error message to take necessary measure, and try again. See P.511
13	Setting the DIPSW for CS Remote Care **NOTE** • **This setting is not normally necessary. Take this step only when necessary in a specific connecting condition.**		When selecting [E-Mail2]: *1.* Select [Service Mode] → [CS Remote Care], and touch [Detail Setting]. *2.* Touch [Schedule] and set the schedule of periodic transmission. See P.507 *3.* Touch [Center Notifi. Item] and set items that will be reported to the Center. See P.507

Step	Procedure		
	Using the telephone line modem	Using the Fax line modem *1	Using E-mail
14	Executing the initial transmission *1.* Select [Service Mode] → [CS Remote Care], and touch [Detail Setting]. *2.* Touch [initial transmission] key on the right bottom of the screen to start initial transmission. *3.* When the machine is properly connected with the center, CS Remote Care setting screen will be displayed. **NOTE** • **The initial transmission key at the right bottom of the screen will be displayed only when the center ID, the device ID, Telephone number of the center and the device telephone number have been input.** See P.507		Receiving the initial connection E-mail message Sending the initial connection E-mail message from the center to the address of the copier. **NOTE** • **When receiving the initial connection E-mail message from the center while CS Remote Care-related screen is being displayed, the current setting information will be deleted, and CS Remote Care setting will be displayed.** • **For sending the initial connection E-mail, see the manual for CS Remote Care center.** • **Messages can be exchanged only between the center with initial connection and the copier.** • **The initial connection from the center will be carried out, and the E-mail address of the center will be stored in the copier.** • **When the initial registration is complete, the E-mail address of the center will be displayed by selecting [Service Mode] → [CS Remote Care] → [Detail Setting], [Basic Setting] → [E-Mail address].**

*1: Setting will be available only when the optional fax board is installed.

B. When using a WebDAV server in http communication

• When using http communication for CS Remote Care, the setup is as follows:

Step	Procedure	
	http (bilateral communication)	http (unilateral communication: Device to Center)
0	Register the device ID to the application at CS Remote Care center. The initial connection is not available unless the device ID is registered.	
1	Be sure to remove the telephone line modem when the http communication is used.	
2	Inputting the ID code *1.* Select [Service Mode] → [CS Remote Care] → [ID Code], and touch [ID Code]. *2.* Input the seven digits ID of the service person, and touch [ID Code] again. See P.506	
3	Clearing the RAM *1.* Select [Service Mode] → [CS Remove Care], and touch [Detail Setting]. *2.* Touch [RAM Clear]. *3.* Select Set, and touch [OK]. See P.509	
4	Selecting the CS Remote Care function Select [Service Mode] → [CS Remove Care] → [System Selection], and touch [http1].	Selecting the CS Remote Care function Select [Service Mode] → [CS Remove Care] → [System Selection], and touch [http2].
5	Inputting the ID code *1.* Select [Service Mode] → [CS Remote Care] → [ID Code], and touch [ID Code]. *2.* Input the seven digits ID of the service person, and touch [ID Code] again. See P.506	

<table>
<tr><th rowspan="2">Step</th><th colspan="2">Procedure</th></tr>
<tr><th>http (bilateral communication)</th><th>http
(unilateral communication: Device to Center)</th></tr>
<tr><td>6</td><td colspan="2">Setting the date and time for CS Remote Care
1. Select [Service Mode] → [CS Remote Care], and touch [Detail Setting].
2. Touch [Date & Time Setting].
3. Input the date, time and the time zone using the 10-key pad, and touch [Set].
See P.507</td></tr>
<tr><td>7</td><td colspan="2">Setting the Center ID
1. Select [Service Mode] → [CS Remote Care], and touch [Detail Setting].
2. Touch [Machine Setting] → [Center ID], and input the Center ID (five digits).
See P.507</td></tr>
<tr><td>8</td><td colspan="2">Confirm the Device ID
1. Select [Service Mode] → [CS Remote Care], and touch [Detail Setting].
2. Touch [Machine Setting] → [Device ID], and input Device ID (13 digits).

NOTE
• [Device ID] displays the serial number that is entered in [Service Mode] → [System 1] → [Serial Number].</td></tr>
<tr><td>9</td><td colspan="2">Encryption setting
1. Select [Service Mode] → [CS Remote Care], and touch [Detail Setting].
2. Touch [Basic Setting] → [Client Setting] and select either Encryption or No Encryption.</td></tr>
<tr><td>10</td><td colspan="2">Heart Beat *1
1. Select [Service Mode] → [CS Remote Care] → [Detail Setting], and touch [Heart Beat].
2. In [Communication], set whether or not to enable Heart Beat communication. (Default: Yes)
3. Touch [Comm. Interval] and enter a Heart Beat transmission interval (1 to 256 minutes, Default: 30 minutes).
4. In [Specified Transmission], set whether or not to enable Heart Beat transmission at a specified interval. (Default: Yes)
5. Touch [Hour] and [Minute] and enter a time for specified transmission.</td></tr>
<tr><td>11</td><td>Proceed to step 12.</td><td>Notification Setting
1. Select [Service Mode] → [CS Remote Care] → [Detail Setting], and touch [Notification Setting].
2. Touch [Schedule] and set the schedule of periodic transmission.
See P.507
3. Touch [Center Notifi. Item] and set items that will be reported to the Center.
See P.507</td></tr>
<tr><td>12</td><td colspan="2">Setting the http server
1. Select [Service Mode] → [CS Remote Care], and touch [Server Set].
See P.514
2. Touch [HTTP Server Settings] and set a URL address, account, password, and port number.
3. Touch [Proxy/SSL] and make proxy server and SSL settings.</td></tr>
<tr><td>13</td><td colspan="2">Setting the DIPSW for CS Remote Care
NOTE
• This setting is not normally necessary. Take this step only when necessary in a specific connecting condition.</td></tr>
</table>

Step	Procedure	
	http (bilateral communication)	http (unilateral communication: Device to Center)
14	Executing the initial transmission *1.* Select [Service Mode] → [CS Remote Care], and touch [Detail Setting]. *2.* Touch [initial transmission] key on the right bottom of the screen to start initial transmission. **NOTE** • **The initial transmission key at the right bottom of the screen will be displayed only when the center ID and the URL address have been input.** See P.507 *3.* When the machine is properly connected with the center, CS Remote Care setting screen will be displayed. • If communication error between the machine and Center occurs, check the error code that appears.	

*1 Heart Beat is a feature that uploads a Heart Beat file to the registered web server at a specified interval to report that the device is operating. Heart Beat files include total counter and status information.

12.7.3 Software SW setting for CS Remote Care

NOTE

- **SW bits data are written into the NVRAM every time a change is made. In case you changed bit data by accident, be sure to restore the previous state.**

A. Input procedure

1. Select [Service Mode] → [CS Remote Care] → [Detail Setting], and touch [Software Switch Setting].
2. Touch [Switch No.], and input the switch number (two digits) using the 10-key pad.
3. Touch [Bit Assignment], and select switch bit number using the arrow keys, and input 0 or 1 using the 10-key pad.
   (For setting by hexadecimal numbers, touch [HEX Assignment] key, and input using the 10-key pad or A to F keys.)
4. Touch [Fix].

NOTE

- **About functions of each switch, see to "B. List of software SW for CS Remote Care."**

B. List of software SW for CS Remote Care

SW No.	Functions	Ref. Page
01	• Dial Mode, Line for send only, Baud rate	P.497
02	• Emergency transmission, Date specified transmission, Call parts replace date, Call drum replace date, Call regular service date(PM), Auto call on the IC Life, Auto call of the IR shortage, Auto call on the zero reset of the fixed parts replacement	P.498
03	• Trouble display setting, Auto call on the toner empty, Auto call on the waste toner bottle full	P.498
04	• CS Remote Care communication mode	P.499
05	• Modem redial interval	P.499
06	• Modem redial times	P.500
07	• Redial for response time out	P.500

SW No.	Functions	Ref. Page
08	• Retransmission interval on E-Mail/http delivery error	P.500
09	• Retransmission times on E-Mail/http delivery error	P.501
10	• Time zone settings	P.501
11	• Timer 1 RING reception → CONNECT reception	P.501
12	• Timer 2 Dial request completed → CONNECT reception	P.502
13	• Reservation	—
14	• Timer 4 Line connection → Start request telegram delivery	P.502
15	• Timer 5 Wait time for other side's response	P.502
16	• Reservation	—
17	• Reservation	—
18	• Attention display To set weather to give the alarm display when using the modem but the power for the modem is OFF.	P.503
19	• Email/http communication mode	P.503
20	• http communication HeartBeat function, http communication HeartBeat periodic transmission	P.503
21	• Automatic transmission of chronological misfeed data at the time of transmission of misfeed frequent occurrence warning, transmission of paper-based misfeed frequent occurrence warning, transmission of original-based misfeed frequent occurrence warning	P.504
22	• Paper-based misfeed frequent occurrence threshold value	P.504
23	• Original-based misfeed frequent occurrence threshold value	P.505
24 : 40	• Reservation	—

C. Details of software SW for CS Remote Care

NOTE

- **Do not change any bit not described on this table.**
- **Shaded portions denote default values.**

SW No.	Default		
01	Bit	7654 3210 1000 0001	HEX: 81

Bit	Functions	Logic		Description
		0	1	
7-4	Baud rate	0110		9600 bps
		0111		19.2 Kbps
		1000		38.4 Kbps
		Other		Not available
3-2	Reservation			
1	Line for send only	Disable	Enable	
0	Dial Mode	Pulse	Tone	

SW No.	Default		
02	Bit	7654 3210	HEX: FF
		1111 1111	

Bit	Functions	Logic		Description
		0	1	
7	Auto call on the zero reset of the fixed parts replacement	Disable	Enable	
6	Auto call of the IR shortage	Disable	Enable	
5	Auto call on the IC Life	Disable	Enable	
4	Call regular service date(PM)	Disable	Enable	
3	Call drum replace date	Disable	Enable	
2	Call parts replace date	Disable	Enable	
1	Date specified transmission	Disable	Enable	
0	Emergency transmission	Disable	Enable	

SW No.	Default		
03	Bit	7654 3210	HEX: 0A
		0000 1010	

Bit	Functions	Logic		Description
		0	1	
7-4	Reservation			
3	Auto call on the waste toner bottle full	Disable	Enable	
2	Reservation			
1	Auto call on the toner empty	Disable	Enable	
0	Trouble Display setting	When the CSRC is not connected	When the CSRC is connected	Select the type of message to be displayed at the time of automatic trouble notification made when the CSRC is connected, either the message when the CSRC is connected or that when the CSRC is not connected.

SW No.	Default		
04	Bit	7654 3210	HEX: 02
		0000 0010	

Bit	Functions	Logic		Description
		0	1	
7-2	Reservation			
1-0	CS Remote Care communication mode	00		DATA
		01		FAX
		10		E-mail
		11		Not available

SW No.	Default		
05	Bit	7654 3210	HEX: 03
		0000 0011	

Bit	Functions	Logic		Description
		0	1	
7-5	Reservation			
4-0	Modem redial interval	00001		1 minute
		00010		2 minutes
		00011		3 minutes
		00100		4 minutes
		00101		5 minutes
		00110		6 minutes
		00111		7 minutes
		01000		8 minutes
		01001		9 minutes
		01010		10 minutes
		Others		Not available

SW No.	Default		
06	Bit	7654 3210	HEX: 0A
		0000 1010	

Bit	Functions	Logic		Description
		0	1	
7-0	Modem redial times	0000 0000		0 time
		0000 0001		1 time
		:		:
		0000 1010		10 times
		:		:
		0110 0010		98 times
		0110 0011		99 times
		Others		Not available

SW No.	Default		
07	Bit	7654 3210	HEX: 01
		0000 0001	

Bit	Functions	Logic		Description
		0	1	
7-0	Redial for response time out	0000 0000		0 time
		0000 0001		1 time
		Others		Not available

SW No.	Default		
08	Bit	7654 3210	HEX: 06
		0000 0110	

Bit	Functions	Logic		Description
		0	1	
1 7-0	Retransmission interval on E-mail/http delivery error	0000 0000		0 minute
		0000 0001		10 minutes
		:		:
		0000 0110		60 minutes
		:		:
		0000 1011		110 minutes
		0000 1100		120 minutes
		Others		Not available

SW No.	Default		
09	Bit	7654 3210	HEX: 0A
		0000 1010	

Bit	Functions	Logic 0	Logic 1	Description
7-0	Retransmission times on E-mail/http delivery error	0000 0000		0 time
		0000 0001		1 time
		:		:
		0000 1010		10 times
		:		:
		0110 0010		98 times
		0110 0011		99 times
		Others		Not available

SW No.	Default		
10	Bit	7654 3210	HEX: 00
		0000 0000	

Bit	Functions	Logic 0	Logic 1	Description
7-0	Time zone settings	0000 0000		-12 hours
		0000 0001		-11 hours
		:		:
		0110 0010		+12 hours
		0001 1010		+13 hours
		Others		Not available

SW No.	Default		
11	Bit	7654 3210	HEX: 20
		0010 0000	

Bit	Functions	Logic 0	Logic 1	Description
7-0	Timer 1 RING reception → CONNECT reception	0000 0000		Not available
		0000 0001		1 sec
		:		:
		0010 0000		32 sec
		:		:
		1111 1110		254 sec
		1111 1111		255 sec

SW No.	Default		
12	Bit	7654 3210	HEX: 40
		0100 0000	

Bit	Functions	Logic		Description
		0	1	
7-0	Timer 2 Dial request completed → CONNECT reception	0000 0000		Not available
		0000 0001		1 sec
		:		:
		0100 0000		64 sec
		:		:
		1111 1110		254 sec
		1111 1111		255 sec

SW No.	Default		
14	Bit	7654 3210	HEX: 20
		0010 0000	

Bit	Functions	Logic		Description
		0	1	
7-0	Timer 4 Line connection → Start request telegram delivery	0000 0001		100 msec
		:		:
		0010 0000		3,200 msec
		:		:
		1111 1110		25,400 msec
		1111 1111		25,500 msec

SW No.	Default		
15	Bit	7654 3210	HEX: 1E
		0001 1110	

Bit	Functions	Logic		Description
		0	1	
7-0	Timer 5 Wait time for other side's response	0000 0001		1 sec
		:		:
		0001 1110		30 sec
		:		:
		1111 1110		254 sec
		1111 1111		255 sec

SW No.	Default		
18	Bit	7654 3210 0000 0001	HEX: 01

Bit	Functions	Logic		Description
		0	1	
7-1	Reservation			
0	Attention display To set weather to give the alarm display when using the modem but the power for the modem is OFF.	OFF	ON	

SW No.	Default		
19	Bit	7654 3210 0000 0000	HEX: 00

Bit	Functions	Logic		Description
		0	1	
7-1	Reservation			
0	Email/http communication mode	Bidirectional	Unidirectional	

SW No.	Default		
20	Bit	7654 3210 0000 0000	HEX: 00

Bit	Functions	Logic		Description
		0	1	
7-2	Reservation			
1	http communication HeartBeat periodic transmission	YES	NO	
0	http communication HeartBeat function	YES	NO	

SW No.	Default		
21	Bit	7654 3210	HEX: 00
		0000 0000	

Bit	Functions	Logic		Description
		0	1	
7-3	Reservation			
2	Automatic transmission of chronological misfeed data at the time of transmission of misfeed frequent occurrence warning	ON	OFF	
1	Original-based misfeed frequent occurrence threshold value	ON	OFF	If the number of jams exceeds the threshold specified per day (0:00 to 23:59), Jam Frequent Occurrence Warning is sent. At 12 a.m. of the next day, the counter is reset.
0	Paper-based misfeed frequent occurrence threshold value	ON	OFF	

SW No.	Default		
22	Bit	7654 3210	HEX: 05
		0000 0101	

Bit	Functions	Logic		Description
		0	1	
7-0	Paper-based misfeed frequent occurrence threshold value	0000 0001		1
		0000 0010		2
		:		:
		0000 0101		5
		:		:
		0000 1110		14
		0000 1111		15
		Others		Not available

SW No.	Default		
23	Bit	7654 3210	HEX: 05
		0000 0101	

Bit	Functions	Logic		Description
		0	1	
7-0	Original-based misfeed frequent occurrence threshold value	0000 0001		1
		0000 0010		2
		:		:
		0000 0101		5
		:		:
		0000 1110		14
		0000 1111		15
		Others		Not available

12.7.4 Setup confirmation

- **Follow the steps below to make sure that CS Remote Care has been properly set up.**

1. Call the Service Mode to the screen.
2. Touch [CS Remote Care].
3. Check to make sure that only selected item is displayed.

12.7.5 Calling the maintenance

- When CE starts maintenance, inputting the ID code of CE (seven digits: numbers which CE can identify. They are controlled by the distributor.) will transmit the information to the Center side and tells that the maintenance has started. When the maintenance is finished, touching [Maintenance Complete] key will transmit the information to the center and tells that it is finished.

A. When starting the maintenance

1. Select Service Mode and touch [CS Remote Care].
2. Touch [ID Code], and input ID Code.
3. Touch [ID Coke].

* The Start key blinks while maintenance is being carried out.

B. When finishing the maintenance

1. Select Service Mode and touch [CS Remote Care].
2. Touch [Maintenance Complete].

12.7.6 Calling the center from the administrator

- When the CS Remote Care setup is complete, the administrator can call the CS Remote Care center.

1. Select [Administrator Settings], and touch [System Connection].
2. Touch [Admin. transmission].
3. Press the Start key.
   When the setup is not complete or another transmission is being carried out, the Admin. transmission key will not be displayed, and the transmission is not available.

NOTE

- **For transmitting data of the machine by calling the center on the specified date and time, refer to the manual for CS Remote Care center.**

12.7.7 Checking the transmission log

- The transmission log list will be output to be checked.

1. Select [Service Mode] → [CS Remote Care], and touch [Detail setting].
2. Touch [Communication Log Print].
3. Load tray 1 or bypass tray with A4S paper.
4. Press the Start key to output transmission log.

12.7.8 Detail on settings

A. System Selection

(1) Use

- To select the system type for remote diagnosis.
- Use to newly build or change the system.

(2) Procedure

- Select E-Mail, Modem, or Fax.
- Fax is available only when the optional fax kit is being installed.

E-Mail1 E-Mail2 Modem Fax http1 http2

B. ID Code

(1) Use

- To register the service ID.
- Use when registering and changing service ID.

(2) Procedure

- Enter a 7-digit code from the 10-key pad. (0000001 to 9999999)

<Registration>

- Touch ID code and enter the service ID.
- Touch [ID code] to register the ID.
- The [Detail Setting] will appear when the ID has been registered.

C. Detail Setting

(1) Basic Setting (E-Mail1, E-Mail2, Modem or Fax)

<Use>

- Execute the primary setting.
- Use to change the set contents.
- Use to register the machine to the CS Remote Care center.

<Procedure>

1. Call the Service Mode to the screen.
2. Touch [CS Remote Care].
3. Touching the [Detail Setting] will display the primary setting.

<Center Setting>

- Set the center ID, Device ID, and the phone No.
- When e-mail is selected for system and all setup procedures are completed, e-mail address of the center is displayed.

* When entering the phone number, 10-keys and keys on the screen have following meanings.

  [-] Pose : Waits to start transmitting after dialing
  [W] Wait : Detects the dial tone of the other end
  [T] Tone dial : Carry out tone dialing
  [P] Pulse dial : Carry out pulse dialing
  [*], [#] : To be used as necessary

<Schedule (Only when the [E-Mail2] is selected)>

- Set the schedule of notification to the center.
- Up to three different notification schedules can be registered.
- Select the notification cycle from [Day], [Week], or [Month].
  When selecting [Day] for the notification cycle, set the Day Frequency.
  When selecting [Week] for the notification cycle, set the Week Frequency and day of the week.
  When selecting [Month], set the Month Frequency and the date of the month.

<Center Notification (Only when the [E-Mail2] is selected)>

- Select the items of data that will be sent to the center in one-way transmission through E-Mail2.
- The following table shows each of the notification item keys and corresponding data.

[1]	Sales count data	[7]	EKC data
[2]	Error count data	[8]	Adjustment data
[3]	Service count data	[9]	Coverage data
[4]	Life count data Life cycle data	[10]	Not used
[5]	CSRC-System data Device config data	[11]	Not used
[6]	History data	[12]	Not used

NOTE

- **Multiple items of data can be selected and sent at one time. However, be sure that only EKC data cannot be sent together with other items of data.**

<Initial Transmission>
- Touching the Initial Transmission key will sent the information to the CS Remote Care center to register the machine.
  (Only when the modem or fax is selected on the system Input.)

(2) Basic Setting (http1 or http2)

<Use>
- Execute the primary setting.
- Use to change the set contents.
- Use to register the machine to the CS Remote Care center.

<Procedure>
1. Call the Service Mode to the screen.
2. Touch [CS Remote Care].
3. Touching the [Detail Setting] will display the primary setting.

<Center Setting>
- Set the center ID.
- Display the device ID.

<Client Setting>
- To set whether or not to encrypt communication.

<Heart Beat>
- To make Heart Beat related settings.
- Heart Beat is a feature that uploads a Heart Beat file to the registered web server at a specified interval to report that the device is operating. Heart Beat files include total counter and status information.

<Initial Transmission>
- Touching the Initial Transmission key will sent the information to the CS Remote Care center to register the machine.

(3) Date & Time Setting

<Use>
- To set the data and time-of-day.
- Use to set or change the date and time-of-day.

<Procedure>
1. Call the Service Mode to the screen.
2. Touch [CS Remote Care].
3. Touch [Detail Setting] to access Date & Time Setting.
4. Enter the date (month, day and year), time-of-day, and the time zone from the 10-key pad.
5. Touch [SET] to start the clock.

(4) RAM Clear

<Use>

- To clear the following data at the center
  ID Code, Primary Setting, Date/Time Input (Time Zone), Software SW Setting and AT Command.
- To be used for setting CS Remote Care.
- To be used for reset the every data of the center to default.

NOTE

- **If RAM clear is selected during transmission, RAM clear processing will be implemented at the time the transmission is completed regardless of whether it is done properly or not.**

<Procedure>

- The default setting is “Unset.”

Set “Unset”

(5) Communication Log Print

<Use>

- To print out the communication log.
- Use to output and use the communication log.

<Procedure>

1. Call the Service Mode on the screen.
2. Touch [CS Remote Care].
3. Touch [Detail Setting] to access communication log print.
4. Load tray 1 or bypass tray with A4S or 8$^{1}/_{2}$ x 11 paper.
5. Press Start key to print out the communication log.

(6) Software Switch Setting

<Use>

- To change the CS Remote Care settings.

<Procedure>

- Refer to “Software SW setting for CS Remote Care” for the setting.
  See P.496

(7) Response Time Out

<Use>

- It sets the intervals for resending e-mails when transmission error occurred.
- It can be set only when [E-Mail] is selected by System Setting.
- To use when changing the intervals for resending e-mails when transmission error occurred.

<Procedure>

- The default setting is 60 minute.

“60 minute” (10 to 1440)

(8) AT Command

<Use>

- To set the command to be issued at the time of modem initialization.
- This setting is available only when [Modem] is selected for the system setting.

<Procedure>

- Enter the command and touch [SET] to register.

(9) Notification Setting

<Use>

- To make the settings of notification to the Center that is performed under unilateral communication via http.
- This setting is available only when [http2] is selected in System Setting.

<Procedure>

<Schedule>

- Set the schedule of notification to the center.
- Up to three different notification schedules can be registered.
- Select the notification cycle from [Day], [Week], or [Month].
  When selecting [Day] for the notification cycle, set the Day Frequency.
  When selecting [Week] for the notification cycle, set the Week Frequency and day of the week.
  When selecting [Month], set the Month Frequency and the date of the month.

<Center Notifi. Item>

- The following table shows each of the notification item keys and corresponding data.

[1]	Sales count data	[7]	EKC data
[2]	Error count data	[8]	Adjustment data
[3]	Service count data	[9]	Coverage data
[4]	Life count data Life cycle data	[10]	Not used
[5]	CSRC-System data Device config data	[11]	Not used
[6]	History data	[12]	Not used

NOTE

- **Multiple items of data can be selected and sent at one time. However, be sure that only EKC data cannot be sent together with other items of data.**

D. Server Setting (E-Mail1 or E-mail2 is selected.)

(1) Server for RX-POP3 server

<Use>

- To set the POP3 server address used for the CS Remote Care.
- To set the address of the POP3 Server.
- POP3 server address can be set with IP address or the domain name.

<Procedure>

<Input IP Address>

- IP address version 4 format
  [0 to 255].[0 to 255].[0 to 255].[0 to 255]

<Input FQDN>

- Enter the domain name.

(2) Server for RX-POP3 login name

<Use>

- To set the logon name for the POP3 server used for the CS Remote Care.

<Procedure>

- The default setting is No.
- Up to 64 characters (alphanumeric characters and symbols) can be used.

(3) Server for RX-POP3 password

<Use>

- To set the logon password for the POP3 server used for the CS Remote Care.

<Procedure>

- The default setting is No.
- Up to 15 characters (alphanumeric characters and symbols) can be used.

(4) Server for RX-POP3 port number

<Use>

- To set the POP3 port number used for the CS Remote Care.

<Procedure>

- The default setting is 110.

"110" (1 to 65535)

(5) Receive-E-mail Address

<Use>

- To set the e-mail address used for the CS Remote Care.

<Procedure>

- The default setting is No.
- Up to 129 characters (alphanumeric characters and symbols) can be used.

(6) Receive-Mail Check

<Use>

- To set whether or not to use mail check and the time interval for the POP server used for the CS Remote Care.
- To change the time interval for mail check.

<Procedure>

- The default setting is No.

"No" (1 to120 min., No)

(7) Receive-Connection timeout

<Use>

- To set the timeout period for connection during reception.

<Procedure>

- The default setting is 60 Sec.

"60 Sec" (30 to 300 Sec)

(8) Receive-APOP Authentication

<Use>

- To set whether or not to authenticate the APOP during reception.

<Procedure>

- The default setting is No.

Yes "No"

(9) Send-SMTP server

<Use>

- To set the SMTP sever address for transmission used for the CS Remote Care.
- SMTP server address can be set by the IP address or the domain name.

<Procedure>

<Input IP Address>

- IP address version 4 format
  [0 to 255].[0 to 255].[0 to 255].[0 to 255]

<Input FQDN>

- Enter the domain name.

(10) Send-SMTP port number

<Use>

- To set the SMTP port number for transmission used for the CS Remote Care.

<Procedure>

- The default setting is 25.

"25" (1 to 65535)

(11) Send-SMTP Connection Time-out

<Use>

- To set the timeout period for transmission.

<Procedure>

- The default setting is 60 Sec.

"60 Sec" (30 to 300 Sec)

(12) Send-Authentication Setting

<Use>

- To set whether or not to authenticate during transmission via SMTP server.
- To use when authenticating during transmission.
  Available authentication mode: POP Before SMTP, SMTP authentication

<Procedure>

- The default setting is OFF.

"OFF" POP Before SMTP SMTP Authentication

* Setting to "POP Before SMTP" will set the time for POP Before SMTP.

- The default setting is 60 Sec.

"60 Sec" (0 to 60 Sec)

* When setting to SMTP authentication, touch the "Setting Check" key for authentication.
  User ID : Enter the user ID for SMTP authentication.
  Password : Enter the password for SMTP authentication.
  Domain name : Enter the domain name for SMTP authentication.

(13) TX/RX Test

<Use>

- To determine the correct transmission and reception using CS Remote Care.

<Procedure>

- Press the Start key to let the machine start the transmission and reception test.
- The test procedure and result will be displayed on the screen.

(14) Data Initialization

<Use>

- To initialize the contents for the sever setting.

<Procedure>

- The default setting is No.

Yes "No"

E. Server Setting (http1 or http2 is selected)

(1) HTTP Server Settings

<Use>

- To set a http server at the other end that is used in CS Remote Care.

<Procedure>

<URL>

- To set the address of the http server.

<Account>

- To set an account that is used to access the http server.

<Password>

- To set a password that is used to access the http server.

<Port Number>

- To set a port number that is used to access the http server.

(2) Proxy/SSL

<Use>

- To make proxy/SSL settings of the http server at the other end that is used in CS Remote Care.

<Procedure>

<Proxy Server>

- To set whether or not to use a proxy server.

<SSL Settings>

- To set whether or not to use SSL communication.

(3) Data Initialization

<Use>

- To initialize values in the server settings.

12.7.9 List of the CS Remote Care error code

A. When connecting by modem

Error code	Error	Solution
0001	The line is busy (Busy detection)	• Transmit again manually.
0002	Failure of the Modem default setting at transmitting (When the transmission completes with modem initial setting failed)	• Check if the power of the modem is ON. • Check the connecting condition between the modem and the main body.
0003	Timeout of CONNECT at transmitting (No response to ATD)	• Transmit again manually • Check if the power of the modem is ON. • Check the connecting condition between the modem and the main body.
0005	Timeout of CONNECT at receiving (No response to ATA)	• Check if the power of the modem is ON. • Check the connecting condition between the modem and the main body.
0006	Shut down of the data modem line (Host) (Carrier OFF is detected)	• No solution, because the line is shut down at the host side.
0008	Timeout of start request telegram delivery (Start request telegram is not delivered after line connection)	• Transmit again manually.
0009	Timeout of finish request telegram delivery (Finish request telegram is not delivered (Start of shut down).)	• Transmit again manually.
000A	Receiving rejection (Receiving is made when the main body is set to reject receiving.)	• Check the setting condition of the host side. • Check the setting condition of the main body side.
000B	RS232C driver over run (When the modem detects over run.)	• If the same error is detected several times, turn the modem power OFF and ON.
000C	If the same error is detected several times, turn the modem power OFF and ON.	• If the same error is detected several times, turn the modem power OFF and ON.
000D	Break Interrupt (BI) indicator (When the modem detects Break Interrupt (BI) indicator.)	• If the same error is detected several times, turn the modem power OFF and ON.
0011	Baud rate ERROR (When selected baud rate is out of the specification (9600 bps to 38400 bps).)	• Check the baud rate of the software DipSW.
0018	Machine ID has already been registered (Request telegram 2 (SET-UP) comes from the main body that has already registered machine ID.)	• Set the initial registrations again for all including the host side.
0019	Center ID error (Center ID of the host is not identical with the one of start request telegram.)	• Check center ID setting of the main body side. • Check center ID setting of the main body side.

Error code	Error	Solution
001A	Device ID inconsistency (Device ID of the host is not identical with the one of start request telegram.)	• Check device ID setting of the main body side. • Check the setting of the host side.
001B	Device ID unregistered (Request telegram 2 (Constant data transmitting, emergency call) comes from the main body that has not registered machine ID yet.)	• Check device ID setting of the main body side. • Check the setting of the host side.
001E	Impossible to change (during printing) (Setting cannot be changed because the setting change is made during the machine is printing or starts printing.)	• Try again when the machine is not printing.
0020	Timeout of telegram delivery (At waiting mode of telegram delivery the machine fails to receive the telegram in a given time.)	• Try communication again.
0027	Transmission / receiving collision (Receiving is detecting during transmitting processing)	• Try communication again.

NOTE

- **When a code other than the ones listed above is displayed, contact KMBT and inform the error code.**

B. When connecting by e-mails

Error code	Error	Solution
0001	Connection timeout during transmission	• Check the SMTP server on User side.
0###	Transmission error ###: SMTP responding code (hexadecimal)	• Check the SMTP server on User side.
0003	Connection timeout when receiving	• Check the POP3 server on User side.
0005	Receiving error	• Check the POP3 server on User side.
1030	Machine ID mismatching • Received an e-mail which tells that machine ID mismatches.	• Check the machine ID setting. • Check the machine ID setting on host side.
1050	Grammar error • Received mail did not define the CS Remote Care command (2 digits). • The Type of Subject and the command of attached file are not consistent.	• Check mail content.
1061	Modifying not allowed • The host sent a command mail that asked modifying data of item where setting change is not allowed.	• Ask the host to send another instruction mail for modifying.
1062	Modifying not available due to the copy job currently performing • When informing the host that it cannot be modified due to the copy job currently performing.	• Ask the host to send another instruction mail for modifying.
1080	Data length problem • LEN value of TEXT data and actual data length are not consistent.	• Ask the host to send another instruction mail for modifying.
1081	Frame No. error • The last frame has not been received. • There are missing frame No.	• Check the status of the machine registration on host side.
1082	Subject Type problem • Received code did not define the Type of Subject.	• Ask the host to send another instruction mail for modifying.
1084	Date expired • Expiration date for data modification command has passed.	• Ask the host to send another instruction mail for modifying.
1091	Oversized command • Received attached file exceeds the machine's receive buffer size.	• Ask the host to send another instruction mail for modifying.
1092	Received an error mail when center setup is not complete	• Check the status of the machine registration on host side.
2039	Socket is not connected. • LAN cable on the copier side is detached.	• Check the SMTP server and POP3 server on user side.
203E	Network is down. • LAN cable on the copier side is detached.	• Check the connection between the copier on the user's side and the network connector. • Check the network environment on the user's side.

Error code	Error	Solution
3000	POP3_AUTHORIZATION_ERR	• Check the POP3 server environment on user's side.
3001	POP3_TRANSACTION_ERR	• Check the POP3 server environment on user's side.
3002	POP3_CONNECT_ERR	• Check the POP3 server environment on user's side.
3003	POP3_TIMEOUT_ERR	• Check the POP3 server environment on user's side.
3004	POP3_FORMAT_ERR	• Check the POP3 server environment on user's side.
3005	POP3_MEMORY_ERR	• Check the POP3 server environment on user's side.
3006	POP3_JOBID_ERR	• Check the POP3 server environment on user's side.
3007	POP3_NO_DATA_ERR	• Check the POP3 server environment on user's side.
3008	POP3_DELETE_FAIL_ERR	• Check the POP3 server environment on user's side.
3009	POP3_MAILBOX_FULL	• Check the POP3 server environment on user's side.
4103	Not ready • Tried to transmit or receive an e-mail when the machine was not yet in the e-mail receiving status after power was turned ON.	• Wait for a while and try transmitting again.
4104	SMTP channel not ready	• Wait for a while and try transmitting again.
4105	POP3 channel not ready	• Wait for a while and try transmitting again.
4106	Not Ready other than the ones listed above.	• Wait for a while and try transmitting again.

NOTE

- **When a code other than the ones listed above is displayed, contact KMBT and inform the error code.**

C. When connecting by http

Error code	Error	Solution
0001	Connection timeout during transmission	• Check the http server on User side.
0***	Transmission error ###: http responding code (hexadecimal)	• Check the http server on User side.
0003	Connection timeout when receiving	• Check the POP3 server on User side.
0005	Receiving error	• Check the POP3 server on User side.
1030	Machine ID mismatching • Received an e-mail which tells that machine ID mismatches.	• Check the machine ID setting. • Check the machine ID setting on host side.
1050	Grammar error • Received mail did not define the CS Remote Care command (2 digits). • The Type of Subject and the command of attached file are not consistent.	• Check mail content.
1061	Modifying not allowed • The host sent a command mail that asked modifying data of item where setting change is not allowed.	• Ask the host to send another instruction mail for modifying.
1062	Modifying not available due to the copy job currently performing • When informing the host that it cannot be modified due to the copy job currently performing.	• Ask the host to send another instruction mail for modifying.
1080	Data length problem • LEN value of TEXT data and actual data length are not consistent.	• Ask the host to send another instruction mail for modifying.
1081	Frame No. error • The last frame has not been received. • There are missing frame No.	• Check the status of the machine registration on host side.
1082	Subject Type problem • Received code did not define the Type of Subject.	• Ask the host to send another instruction mail for modifying.
1084	Date expired • Expiration date for data modification command has passed.	• Ask the host to send another instruction mail for modifying.
1091	Oversized command • Received attached file exceeds the machine's receive buffer size.	• Ask the host to send another instruction mail for modifying.
2001	http request result problem • Internal status error	• Check user network environment. • Check http server environment.
2002	http request result problem • File list acquisition result problem	
2003	http request result problem • Request header transmission failure	
2004	http request result problem • Request body transmission failure	

Error code	Error	Solution
2005	http request result problem • Response header receive response failure	• Check user network environment. • Check http server environment.
2006	http request result problem • Response body receive response failure	
2007	http request result problem • Session ID inconsistent	
3002	http request result problem • Unopened client ID was specified	
3003	http request result problem • Receive time out occurred	
3004	http request result problem • Receive error occurred. Or wrong request URL was specified.	
3005	http request result problem • Content-Length or receive size exceeded the specified max. transfer size. Message body size was too large.	
3006	http request result problem • Due to reset, process was stopped. Or message body size exceeded the specified max. transfer size.	
3007	http request result problem • Internal error occurred. Or due to internal reset, process was stopped.	
3008	http request result problem • Connection to WebDAV server failed.	
3009	http request result problem • Error occurred during transmission to the WebDAV server.	
3010	http request result problem • Time out occurred during transmission to the WebDav server.	
3011	http request result problem • Connection to the proxy server failed.	
3012	http request result problem • The proxy server refused CONNECT request.	
3013	http request result problem • The proxy server was set to enabled, but the proxy server host was not set.	
3014	http request result problem • Proxy server authentication failed.	
3015	http request result problem • Other errors were sent from the proxy server.	
3016	http request result problem • Internal error occurred.	

Error code	Error	Solution
3017	http request result problem • As the device application specified MIO_REQBODY_ERROR, process was stopped.	• Check user network environment. • Check http server environment.
4103	Not Ready • After turning the main power switch ON, the machine tried to start http communication though http communication was not ready to work.	• Wait for a while and try transmitting again.
4106	Not Ready other than the ones listed above.	• Wait for a while and try transmitting again.

NOTE

- **When a code other than the ones listed above is displayed, contact KMBT and inform the error code.**

D. When connecting by Fax modem

Error code	Error	Solution
T50	Host terminal ID not correct	• Check the telephone number set for host.
R80	Serial number received from the host not correct.	• Check the status of the Machine registration on host side.
R81	Disconnection of writing instruction from host during machine is running.	• Wait for a while and try transmitting again.
R82	Disconnection of FAX-CSRC instruction when FAX-CSRC is not allowed.	• Check the status of the Machine registration on host side.
R83	Host command error.	• Contact KMBT and inform the error code.
R84	NVRAM writing error.	• Contact KMBT and inform the error code.

NOTE

- **When a code other than the ones listed above is displayed, see the FK-502 Service Manual.**

12.7.10 Troubleshooting for CS Remote Care

If communication is not done properly, check the condition by following the procedures shown below.

1. Shift the screen in the order of [Service Mode] → [CS Remote Care] → [Detail Setting]. At this time, in the cases of initial transmitting / administrator transmitting / maintenance start transmitting / maintenance finish transmitting, the communication result will be displayed at the top of the screen.

* For the communication result, the following message will be displayed based on its success or failure.

Display of communication result	Cause	Solution
Communicating	—	—
Communication trouble with the center	Although the machine tries to communicate with the center, there is any trouble and the communication completes unsuccessfully.	• See the list of error message and confirm the corresponding point. See P.515
Complete successfully	—	—
Modem trouble	Although the machine tries to communicate with the center, there is any trouble in the modem.	• Check if the power of modem in ON. • Check if there is any problem in connection between the modem and the main body.
Busy line	Although the machine tries to communicate with the center, the line to the center is busy.	• Communicate with the center again.
No response	Although the machine tries to communicate with the center, there is no response from the center.	• Communicate with the center again. • Check the communication environment of the center side.

12.7.11 CS Remote Care Operation under Enhanced Security Mode

CS Remote Care can be used even when “ON” is selected in [Administrator Settings] → [Security Settings] → [Enhanced Security Mode].
However, to keep the enhanced security level, the following restrictions are accompanied.

- Only SSL communication is available.
- Error occurs if the Center tries to send the following commands.
  - Firmware update command
  - Command of reading and updating account track information
  - Machine settings update command
  - Command of reading and updating Internet ISW setting information

12.8 System 1

12.8.1 Marketing Area

A. Use

- To make the various settings (language, paper size, fixed zoom ratios, etc.) according to the applicable marketing area.
- Upon setup.

B. Procedure

<Marketing Area>

- Select the applicable marketing area and touch [END] to set the marketing area.

JAPAN	US	Europe	Others1
Others2	Others3	Others4	Others5

<Fax Target>

1. Touch the [Fax Target].
2. Select the applicable marketing area using [+] and [-] keys, and touch [END].

(1) List of functions affected by marketing area setting

- The listed are the functions of which setting is automatically changed depending on the selected marketing area.

Marketing area / Setting item	JAPAN	US	Europe	Others1	Others2	Others3	Others4	Others5
Language (Default value)	Japanese	English	English	English	English	Simplified Chinese	Traditional Chinese	English
⚠1 Language Selection (Selectable language)	Japanese English French Italian German Spanish	English French Italian German Spanish Japanese	English French Italian German Spanish Japanese	English French Spanish Japanese	English French Spanish Traditional Chinese	Simplified Chinese English	Traditional Chinese English	English French Spanish Hangul
⚠1 Additional selectable language when the UK-203 is installed.	Simplified Chinese Traditional Chinese Hangul	Simplified Chinese Traditional Chinese Hangul	Simplified Chinese Traditional Chinese Hangul	Italian German Simplified Chinese Traditional Chinese Hangul	Italian German Japanese Simplified Chinese Hangul	French Italian German Spanish Japanese Traditional Chinese Hangul	French Italian German Spanish Japanese Simplified Chinese Hangul	Italian German Japanese Simplified Chinese Traditional Chinese
Foolscap size	8 x 13	8 x 13	8 x 13	8 x 13	8 x 13	8 x 13	8 x 13	8 x 13
LCT size	A4 LEF	Letter LEF	A4 LEF	A4 LEF	A4 LEF	A4 LEF	A4 LEF	A4 LEF
LCC size	A4 LEF	Letter LEF	A4 LEF	A4 LEF	A4 LEF	A4 LEF	A4 LEF	A4 LEF
Unit	Metric	Inch	Metric	Metric	Metric	Metric	Metric	Metric
Total counter mode	Mode1	Mode2	Mode2	Mode2	Mode2	Mode2	Mode2	Mode2
Size counter	No count	A3, 11x17	A3,B4, 11x17, 8 1/2x14	A3,B4, 11x17, 8 1/2x14	A3,B4, 11x17, 8 1/2x14	A3,B4, 11x17, 8 1/2x14	A3,B4, 11x17, 8 1/2x14	A3,B4, 11x17, 8 1/2x14
Unit Change	Japan	US	Europe	Europe	Europe	Europe	Europe	Europe

NOTE

- **The language used in the service mode depends on the Language Selection setting, and changes to the language as following table.**

Language Selection	Service Mode
Japanese	Japanese
Simplified Chinese	Simplified Chinese
Traditional Chinese	Traditional Chinese
Hangul	Hangul
Language other than listed above	English

12.8.2 Tel/Fax Number

A. Use

- To enter the tel/fax number of the service contact that will appear on the control panel when a malfunction occurs in the machine.
- Upon setup.

B. Procedure

- Enter the tel/fax number (19 digits) from the 10-key pad.
- Use Interrupt key to enter "-."

12.8.3 Serial Number

A. Use

- To register the serial numbers of the machine and options.
- The numbers will be printed on the list output.
- To use the serial number as machine ID during CS Remote Care communication.
- Upon setup.

NOTE

- **When main power switch was turned ON while the serial No. was not entered, the message to require entering the serial No. will be displayed.**
- **Do not change the serial number registered in the machine. If memory data is lost and entering the serial number is required, enter the original correct serial number. Be careful to enter the correct serial number since characters other than alphanumeric can be also entered. CSRC communication is not available if a wrong serial number is entered.**
- **The serial number of "Printer" can be checked through the following: [Utility] → [Meter Count] → [Check Details].**

B. Procedure

- Type the serial numbers.
  Printer, Scanner, ADF, LCT, Sorter/FN, Duplex, Vendor, Fax1, Fax2, RU, ZU (Not used)

12.8.4 No Sleep

A. Use

- To display the option of "OFF" for the sleep mode setting screen available from administrator settings.

NOTE

- **The sleep mode will begin in 48 hours even if it sets it to "OFF."**

B. Procedure

- The default setting is "Prohibit."

Permit	"Prohibit"

12.8.5 Foolscap Size Setting

A. Use

- To set the size for foolscap paper.
- Upon setup.

B. Procedure

- Select the size from among the following five.

$8^1/_2$ x $13^1/_2$	220 x 330 mm	$8^1/_2$ x 13	$8^1/_4$ x 13	$8^1/_8$ x $13^1/_4$	8 x 13

12.8.6 Original Size Detection

A. Use

- To change the document size detection table.
- Use to change the setting for the document size detection table.

  Copy Glass : To change the size detection table for the document glass.

  $8^1/_2$ x 14/Foolscap Size Detection

  : To set whether paper of $8^1/_2$ x $13^1/_2$ size is detected as $8^1/_2$ x 14 or foolscap in original glass or ADF size detection.
  When Table 1 is selected in Copy Glass, paper of $8^1/_2$ x $13^1/_2$ size is detected as foolscap despite of the setting of $8^1/_2$ x 14/Foolscap Size Detection.

B. Procedure

<Copy Glass>

- The default setting is "Table1."

"Table1"	Table2

NOTE

- **Table 2 can be set only when original size detection 2 sensor is being mounted.**

<81/2 x 14/Foolscap Size Detection>

- The default setting is "$8^1/_2$ x 14."

"$8^1/_2$ x 14"	Foolscap

12.8.7 Install Date

A. Use

- To register the date the main body was installed.
- Upon setup.

B. Procedure

1. Call the Service Mode on the screen.
2. Select the key as follows.
   [System 1] → [Install Date].
3. Enter the date (Year 4 digit → Month 2 digit → date 2 digit) from the 10-key pad.
4. Touch [Entry] to set the date of installation.

12.8.8 Initialization-Clear All Data

A. Use

- To initialize the setting data.
- For details on items to be cleared, see “CONTENTS TO BE CLEARED BY RESET FUNCTION.”
  See P.640

NOTE

- **When removing or installing the hard disk after registering the data below, be sure to clear the data.**
  Referring data: One-touch registration, user authentication/account track.

B. Procedure

1. Call the Service Mode to the screen.
2. Select the key as follows.
   [System 1] → [Initialization] → [Clear All Data].
3. Press the Start key.
4. When [OK] is displayed, turn off the main power switch and turn it on again more than 10 seconds after.

12.8.9 Initialization-Clear Individual Data

- Clear Individual Data enables you to select and clear multiple items at a time.

A. Copy Program Data

(1) Use

- To clear data registered as copy program.
- Use this feature to clear all copy program data at a time.

(2) Procedure

1. Select the key as follows.
   [System 1] → [Initialization] → [Copy Program Data].
2. Press the Start key.
3. When [OK] is displayed, turn off the main power switch and turn it on again more than 10 seconds after.

B. Address Registration Data

(1) Use

- To clear address registration data.
- Use this feature to initialize address registration data.
- The following are address registration data:
  Group address data, Program key data, One-touch destination data, Mail body data, Subject data, Prefix/suffix data

(2) Procedure

1. Select the key as follows.
   [System 1] → [Initialization] → [Address Registration Data].
2. Press the Start key.
3. When [OK] is displayed, turn off the main power switch and turn it on again more than 10 seconds after.

C. Fax Setting Data

(1) Use

- To clear fax-related settings and parameters. However, address-related data is not cleared.
- Use this feature to clear fax-related settings and parameters at a time.

(2) Procedure

1. Select the key as follows.
   [System 1] → [Initialization] → [Fax Setting Data].
2. Press the Start key.
3. When [OK] is displayed, turn off the main power switch and turn it on again more than 10 seconds after.

D. All History Data

(1) Use

- To clear history data.
- The following are history data:
  Job history, Journal history, Receive reject history, Destination history, Job secure counter (Internal data for history management)

(2) Procedure

1. Select the key as follows.
   [System 1] → [Initialization] → [All History Data].
2. Press the Start key.
3. When [OK] is displayed, turn off the main power switch and turn it on again more than 10 seconds after.

E. Network Setting Data

(1) Use

- To clear network-related settings.
- Use this feature to initialize and set network-related settings again when the machine does not work properly upon change of network-related settings.

(2) Procedure

1. Select the key as follows.
   [System 1] → [Initialization] → [Network Setting Data].
2. Press the Start key.
3. When [OK] is displayed, turn off the main power switch and turn it on again more than 10 seconds after.

12.8.10 Initialization-System Error Clear

A. Use

- To reset the trouble data.
- Use to clear the [Jam], [Trouble], [Error] displays, and other improper displays.
- For details on items to be cleared, see “CONTENTS TO BE CLEARED BY RESET FUNCTION.”
See P.640

B. Procedure

1. Call the Service Mode to the screen.
2. Select the key as follows.
[System 1] → [Initialization] → [System Error Clear].
3. Press the Start key.
4. When [OK] is displayed, turn off the main power switch and turn it on again more than 10 seconds after.

12.8.11 Charging CH cleaning-Cleaning

A. Use

- Cleaning operation can be executed to the comb electrode of the imaging unit /K.
- When image problems occur, you can execute the cleaning operation manually.

B. Procedure

1. Call the Service Mode to the screen.
2. Select the key as follows.
[System 1] → [Charging CH cleaning] → [Cleaning].
3. Press the Start key.
4. When the Start key changes its lighting from red to blue, you can confirm that the cleaning operation has been completed.

12.8.12 Charging CH cleaning-Self-Cleaning

A. Use

- This setting allows you to select the self cleaning of the comb electrode section in the imaging unit /K.
- This setting can be used to temporarily stop the self cleaning operation in order to address problems.

ON : The self cleaning operation occurs every 2,700 sheets of print, synchronizing the transfer belt cleaning operation.
OFF : The machine does not perform the self cleaning operation.

NOTE

- **For color imaging units, the comb electrode section needs to be cleaned by hand every time when a toner cartridge of the corresponding color is replaced.**

B. Procedure

- The default setting is ON.

“ON” OFF

12.8.13 Trouble Isolation

A. Use

- Individual units and options have a set or unset setting for the trouble isolation function.
- When a problem occurs, this function enables the continuous use of the units that are not affected by separately controlling them and isolating other units that have a problem.
- The machine isolates only units that have a "set" setting.

NOTE

- **The malfunction detection mechanism is not applied to units and options that are being isolated.**
- This function can be selected for the following units and options.
  Tray 1, Tray 2, Tray 3, Tray 4, LCT, manual, Half-Fold/Tri-Fold Center Stapling, Punch, Staple, Scanner, ADF
- Though trouble isolation is not selected, if the specified malfunctions occur on the above listed units or options, an alert screen appears and asks users whether to isolate the units or options where malfunction occurs.
  See the "Trouble shooting" section for the corresponding trouble codes.
  See P.715

B. Procedure

- The default setting is Unset for individual units and options.

Set	"Unset"

- After changing the setting, touch [Decision] and turn the main power switch OFF and ON to make the new setting effective.

12.8.14 Post card transfer table

A. Use

- This setting allows you to select the transfer table to be used for thick3 postcards.
- For the use of thick 3 postcards, you can select the transfer table suitable for postcards.
- This setting is used to improve transfer performance to postcards.

Post. : The postcard 2nd image transfer table is used when printing on thick3 postcards.
Thick 3 : The normal thick3 2nd image transfer table is used when printing on thick 3 postcards.

B. Procedure

- The default setting is Thick 3.

Post.	"Thick 3"

⚠1 12.8.15 Change Warm Up Time

- Not used.

12.8.16 Machine State LED Setting

A. Use

- To set how to display main body statuses on the machine state LED (state display lamp, paper empty lamp).
- Each of Type1 and Type2 has the following LED display forms.

Machine State LED Setting		Type1	Type2
Warning statuses	Attention • Toner supply door open • Improper toner cartridge placement	Blinking	Blinking
	Near life	Blinking	Unlit
	Alert code	Unlit	Unlit
	Trouble isolation	Blinking	Blinking
	Fatal error • Trouble code • Jam • Door opened • Life stop	Lit	Lit
Amount of paper remaining (Tray 1 and 2)	100 % to near empty	Unlit	Unlit
	Near empty	Blinking	Unlit
	Empty	Lit	Lit
	Being lifted up Door opened or closed	Unlit	Unlit
Amount of paper remaining (Tray 3 and 4, LCT)	100 % to near empty	Unlit	Unlit
	Near empty	Blinking	Unlit
	Empty	Lit	Lit
	Being lifted up Door opened or closed	Unlit	Unlit

B. Procedure

- Each default setting is Type2.

Type 1 “Type 2”

12.9 System 2

12.9.1 HDD

- Not used.

12.9.2 Image Controller Setting

A. Use

- To set the type of the controller.
- [Peripheral Mode] appears when [Others] is selected.
- When setting up the controller.

B. Procedure

Image Controller Setting

- Select the controller to be used.
  "Controller 0" : The standard controller is used.
  Controller 1 : The optional image controller IC-412 is used.
  Controller 2 : undefined.
  Controller 3 : undefined.
  Others : undefined.

Peripheral Mode

- Select the operating mode of the Scanner.
  Mode 1: undefined.
  Mode 2: undefined.
  Mode 3: undefined.

NOTE

- **When the following setting is "ON", this setting should be set to "Controller 0". [Administrator Settings] → [Security Settings] → [Enhanced Security Mode] When [Enhanced Security Mode] is set to "ON", this setting cannot be changed.**
- **After changing setting, make sure to turn off the main power switch and turn it on again more than 10 seconds after.**

Note on returning the setting from "Controller 1" to "Controller 0".

- Selecting "Controller 0" will initialize the following settings made while "Controller 1" was selected. Reset the following items as necessary when using the internal standard controller.

<Control panel on the machine>

- Setting items included in [Network Setting] available from [Administrator Setting]. (Except [Status Notification Setting] and [Prefix/Suffix Setting] available from the following setting. [Administrator Settings] → [Network Settings] → [Detail Settings].)
- The following setting
  [Administrator Settings] → [User Authentication /Account Track] →[General Settings] → [External Server]
- The following setting
  [Administrator Settings] → [System Connection] → [OpenAPI Setting]
- Mailbox Destination (scan)
- Information on the original specified by the program destination

<Page Scope Web Connection>

- SSL/TLS

12.9.3 Option Board Status

A. Use

1 • To set when the optional fax board (FK-502) or DSC board (SC-507) is mounted.
- Use when setting up the optional fax kit (FK-502) or security kit (SC-507) is mounted.
1 • [DSC1], [DSC2] will be displayed in bizhub C652/C552 machines where the function version is version 2 or later and in all bizhub C452 machines.

B. Procedure

- The default settings are “Unset.”

Fax (circuit 1)	: Set	“Unset”
Fax (circuit 2)	: Set	“Unset”
1 DSC1	: Set	“Unset”
DSC2	: Not used	

NOTE

- **When the setting has been changed, turn off the main power switch and turn it on again more than 10 seconds after.**

12.9.4 Consumable Life Reminder

A. Use

- To select whether or not to give the display of PM parts lifetime
  PM parts lifetime display : An entire screen warning is given when the service life of a specific unit has been reached, prompting the user to replace the part.
- Applicable units: Transfer belt unit, fusing unit, imaging unit (C, M, Y, K)
- Use to select not to give the display of PM parts lifetime.

B. Procedure

- The default setting is “No.”

Yes “No”

12.9.5 Unit Change

A. Use

- To select who is to replace a unit.
- Upon setup.
- When the unit life arrives, the warning display is intended for the specific person who is going to replace the unit.
  When "User" is selected : Printing is inhibited.
  When "Service" is selected : Life warning.
- To set whether or not to display a toner near empty warning.
- Drum unit/K and Developing unit/K are not subject to this setting because they are replaced by customer engineer.

B. Procedure

<Unit Change>

- The following are the default settings:

	US, Japan, Others 4		Europe, Others1/2/3	
Toner Cartridge	"User"	Service	User	Service
Imaging Unit	User	"Service"	"User"	Service
Waste Toner Box	User	"Service"	"User"	Service
Punch Dust Box	User	"Service"	"User"	Service

<Warning Display>

Toner Near Empty : "Yes" No

12.9.6 Software Switch Setting

A. Use

- To set the operating characteristic of each function from software switch depending on what types of printing are normally made.

B. Procedure

1. Touch [Software Switch Setting].
2. Touch [Switch No.] and enter the intended switch number with the ten-key pad.
3. Touch [Bit Assignment].
4. Use [←] or [→] to select a bit. To set the bit, enter 0 or 1 with the ten-key pad.
5. To set the bit in hex, touch [HEX Assignment] and use the ten-key pad and [A] to [F] keys to enter numbers and characters.
6. Touch [Fix].

12.9.7 Software Switch Setting-Setting items in the software switch setting

A. Change the function version of the machine

(1) Use

- To change the function version of the firmware version.
- To use when the firmware is updated from the initial version to the Ver. 4x.

HEX Assignment 00 : Operate with the function version 1. (Default setting)
HEX Assignment 10 : Operate with the function version 2.

(2) Procedure

1. Touch [Software Switch Setting].
2. Touch [Switch No.] and enter “25” with the ten-key pad.
3. Touch [HEX Assignment] and enter “00” or “10” with the ten-key pad.
4. Touch [Fix].

B. ACS mode control change

(1) Use

- To change the 1st image transfer roller pressure/retraction operation control in ACS mode.
- When a user makes mainly black prints, selecting 01 may allow avoiding the PC drum wear-out caused by unnecessary rotation of color imaging units.

HEX Assignment 00 : The color print (pressed) position is set as the default position of the 1st image transfer roller. (Default setting)
HEX Assignment 01 : The black print (retracted) position is set as the default position of the 1st image transfer roller.

(2) Procedure

1. Touch [Software Switch Setting].
2. Touch [Switch No.] and enter “50” with the ten-key pad.
3. Touch [HEX Assignment] and enter “00” or “01” with the ten-key pad.
4. Touch [Fix].

C. Secure Print shortcut key display in the User Box mode menu

(1) Use

- To display the [Secure Print] shortcut key in the User Box mode menu (the default setting is not shown).
  bit0-0: Does not display the shortcut key
  bit0-1: Displays the shortcut key

(2) Procedure

1. Touch [Software Switch Setting].
2. Touch [Switch No.] and enter “69” with the ten-key pad.
3. Touch [BIT Assignment] and select “bit0” with [←]/[→] key.
4. Enter “0” or “1” with the 10-key pad.
5. Touch [Fix].

D. Printing on paper of nonstandard size fed from the bypass tray (AnySize mode)

(1) Use

- To enable printing only by the setting made on the printer driver when printing is attempted on paper of nonstandard size fed by way of the bypass tray (the default setting is the conventional operation).
  bit0-0 : Conventional operation
  bit0-1 : The print cycle is initiated for the paper specified on the printer driver regardless of the bypass tray paper setting.

(2) Procedure

1. Touch [Software Switch Setting].
2. Touch [Switch No.] and enter "69" with the ten-key pad.
3. Touch [BIT Assignment] and select "bit2" with [←]/[→] key.
4. Enter "0" or "1" with the 10-key pad.
5. Touch [Fix].

12.9.8 Scan Caribration

- This feature is not available in this machine.

12.9.9 LCC Size Setting

A. Use

- To set the paper size for the LCC.
- Use to change the paper size for the LCC (tray 3/4).

B. Procedure

- The default setting depends on the setting made for the applicable marketing area.

A4 B5 8 1/2 x 11 16K A5 5 1/2 x 8 1/2 Post. S

12.9.10 LCT Paper Size Setting

A. Use

- To set a LCT type.
- To set the paper size for the LCT.
- Use this feature upon LCT set-up.

B. Procedure

<LCT type setting>

- The default setting is A4LCT.

"A4LCT" A3LCT

* For a selected LCT type, set a paper size.

NOTE

- **When the LCT type setting is changed, the paper size setting in the LCT is returned to the default.**

<A4LCT>

- The default setting depends on the setting made for the applicable marketing area.

A4 8 1/2 x 11

<A3LCT>

- The default setting depends on the setting made for the applicable marketing area.

A3h B4 A4S A4 12 x 18
11 x 17 8 1/2 x 14 8 1/2 x 11 8 1/2 x 11S

12.9.11 Line Mag Setting

- This feature is not available in this machine.

12.9.12 Data Capture

A. Use

- When an error occurs, it acquires the print job data in order to analyze the cause of the error.
- When an error occurs, this will be used to analyze the cause of the error according to the print job data.

B. Procedure

NOTE

- **The following conditions are necessary for this function.**
  When selecting [Security Setting] → [Security Details] → [Print Data Capture] in Administrator Settings, [Allow] must be set.
  The hard disk must be mounted to the machine.
  When selecting [Administrator Settings] → [Network Settings] → [FTP Settings], [FTP Server Settings: ON] must be set.
- **This function is not available when the optional image controller IC-412 is mounted.**

1. Select [Service Mode] → [System 2], and touch [Data Capture]. Select [ON].
   (While the Data Capture setting is [ON], the print job data from the PC will be stored in the hard disk.)

NOTE

- **The original offset value can be disabled to address image failure and other problems caused by individual CCD performance difference.**

2. Check the IP address of the machine.
3. Connect the PC (Windows) and the machine with ethernet cable.
4. Start the DOS command prompt of the PC, and specify the IP address of the machine to start FTP.

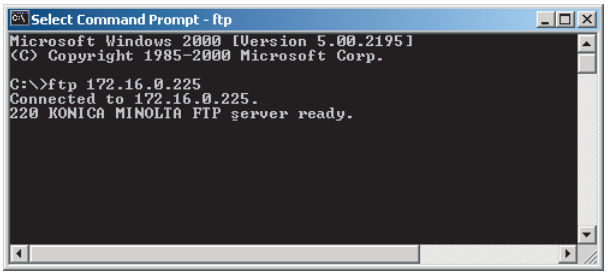

A0P0F3E547DA

5. Input the user name and the password.
   User name: capture
   Password: sysadm

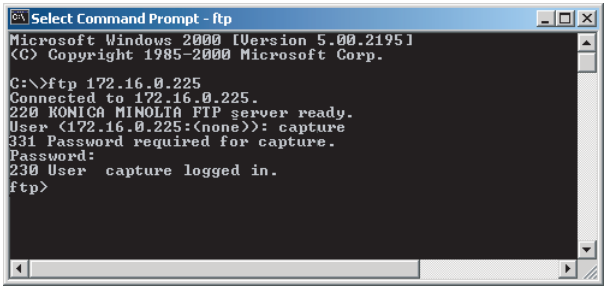

A0P0F3E548DA

6. Using the “ls” command, display the list of the file available for capture.

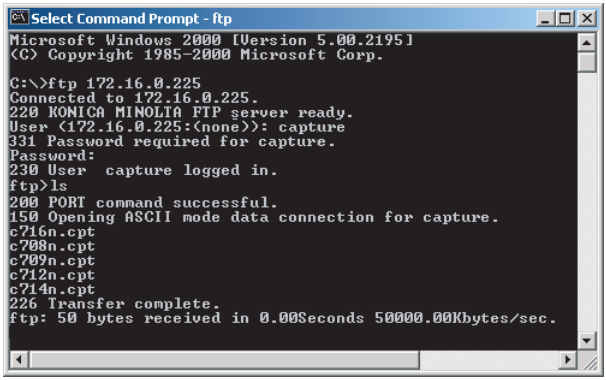

A0P0F3E549DA

7. Using the “binary” command, set the File transfer mode to the binary transfer.

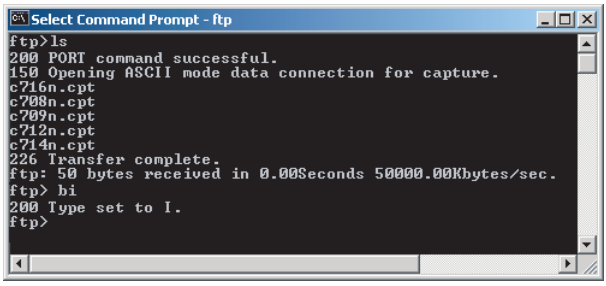

A0P0F3E550DA

8. Using the “get” command, transfer the data for capture to PC.

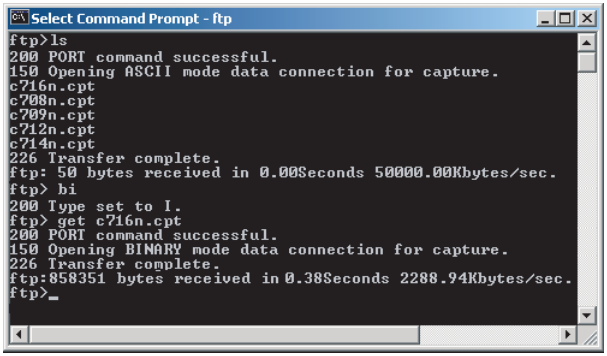

A0P0F3E551DA

9. Finish the command prompt.

NOTE

- **After receiving capture data, select [Administrator Settings] → [Security Settings] → [Security Details], and select [Restrict] for print data capture in order to delete the job data stored in the hard disk.**
  When HDD Format or Overwrite Temporary Data is performed, job data is deleted.

12.9.13 Split Line Detect. Setting-Prior Detection

A. Use

- To set the detection level for the pre-detection of stain on the ADF original glass.
- Use when changing the setting for whether or not to detect the stain on the ADF original glass when opening/closing ADF as well as its detection level as the main/sub power being ON, recovering from the sleep/low power mode, etc.
  Not Set : Detection of stain on the glass will not be conducted.
  Low : Stain on the glass will not be detected easily.
  Normal : Normal level detection.
  High : Stain on the glass will easily be detected.

NOTE

- **Be aware that selecting “Not Set” and performing the pre-detection with the following setting will display “NG.”**
  [Service Mode] → [Machine] → [Thin Line Prior Detection]
- **When “Not Set” is selected, the original glass cleaning operation after the job ends does not operate.**

B. Procedure

- The default setting is “Normal.”

Not Set Low “Normal” High

12.9.14 Split Line Detect. Setting-Warning Level

A. Use

- To set how to display the warning when stain on the ADF original glass is detected.
- Use when changing the display of the warning which requests the cleaning of the stain on the glass detected by the pre-detection of the lines.
  0: Warning will not be displayed.
  1: Warning will be displayed by the maintenance mark. (warning code: D-1/D-2)
  2: Warning will be displayed on the message area on the basic screen.
  3: Warning will be displayed on all screens.

NOTE

- **This setting is invalid when [Prior Detection] is set to "Not Set."**

B. Procedure

- The default setting is 2.

0 1 "2" 3

12.9.15 Split Line Detect. Setting-Paper Passaging Detection

A. Use

- To set the operation for detection and removing operation of stain on the ADF original glass when feeding the original.
- Use when changing the operation for detection and removing operation of stain on the ADF original glass when feeding the original.
  0 : The glass will stop moving when the original is fed, and will not perform removing the stain.
  1 : The glass will move between originals when feeding the original.

B. Procedure

- The default setting is 1

0 "1"

12.9.16 Stamp

A. Use

- To set the mounting status of the optional stamp unit SP-501.
- To use when setting up the stamp unit SP-501.

B. Procedure

- The default setting is Unset.

Set "Unset"

12.9.17 Network Fax Settings

A. Use

- To set whether or not to use network fax function.
- To use network fax function (IP address fax, internet fax).
- Selection will be available when each network fax function is set to "ON" in the following settings.
  [Administrator Settings] → [Network Settings] → [Network Fax Settings] → [Network Fax Function Settings]

B. Procedure

- The default settings are OFF.

IP Address Fax	: ON	"OFF"
SIP-Fax	: Not Used	
Internet Fax	: ON	"OFF"

12.9.18 Image Stabilization Setting

A. Use

- To change the type and timing of image stabilization.
- To provide the desirable image stabilization control that depends on customer's machine usage pattern, i.e. the ratio of color to black print.
  - Standard : This mode is suitable for low-volume users and reduces the number of times image stabilization is carried out when the main power switch is turned ON.
    If the change of absolute humidity is detected during warm-up, normal stabilization is performed during warm-up.
  - Color Priority : This mode is suitable for high-volume and high ratio of color print users. Color stabilization sequence is performed unconditionally when the main power switch and the sub power switch are turned ON.
  - Mono Priority : This mode is suitable for users who use mainly black print and use less color print. It provides monochrome stabilization and reduces the number of times image stabilization is carried out when the main power switch is turned ON. If the change of absolute humidity is detected during warm-up, monochrome stabilization is performed during the warm-up and color stabilization is performed before color printing.

B. Procedure

- The default settings are Standard.

"Standard" Color Priority Mono Priority

12.9.19 User Paper Settings

A. Use

- To set and register individual user paper that includes a different basic weight, fusing temperature, 2nd image transfer fine adjustment value.
- User Paper Settings is also available from [Administrator Settings] → [System Settings] → [Expert Adjustment] → [User Paper Settings].
- To register a paper type that is suitable for individual customer's intended use and use environment.
- The following shows user paper registration keys and corresponding paper types.User Paper 1/2: Plain paper
  User Paper 3 : Thick1
  User Paper 4 : Thick1+
  User Paper 5 : Thick2
  User Paper 6 : Thick3

B. Procedure

1. Call the Service Mode to the screen.
2. Select the key as follows.
   [System 2] → [▶] → [User Paper Settings].
3. Select the desired key from [User Paper 1] to [User Paper 6] to register user paper.
4. Select [Basic Weight] and enter a value with the [+]/[-] key.
5. Select [Heating Side] or [Pressurizing Side] and enter a fusing temperature with the [+]/[-] key.
   The setting range is -20 °C to +5 °C. (1 step: 5 °C)
6. Select one from the following: [Front-Color], [Front-Black], [Back-Color], or [Back-Black]. Enter a 2nd image transfer fine adjustment value with the [+]/[-] key.
   The setting rage is -7 to +8. (1 step: 1 increment or decrement)
7. Set paper of A4S or $8^{1}/_{2}$ x 11S on the manual tray.
8. Select [1-side] (only front side) or [Front side] (only back side) and press the Start key.
9. Check the image of the output test pattern.
   If the image is not acceptable, adjust the settings and output the test pattern again.

(1) Test Pattern in User Paper Settings

- The printable test pattern for user paper settings is provided to ease determining the most appropriate 2nd image transfer output value when customizing user paper.
- This test pattern changes output voltage as shown below based on the standard voltage A (voltage determined by the 2nd image auto transfer voltage control) on a sheet of paper.

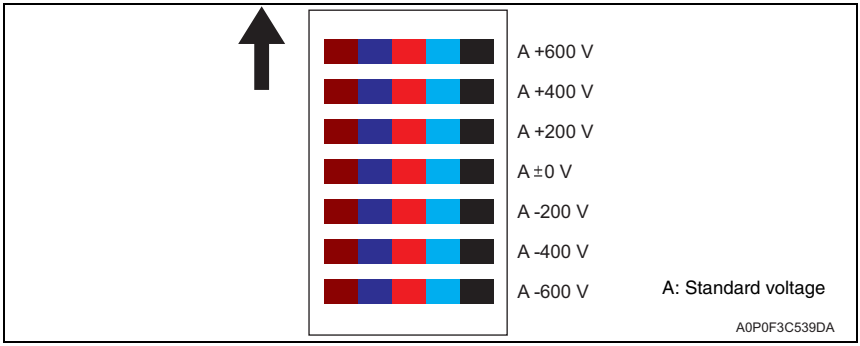

12.9.20 Coverage Rate Screen

A. Use

- To set whether or not to display a coverage rate on the sales counter screen and sales counter list.

B. Procedure

- The default setting is Display.

"Display" Do Not Display

12.9.21 JAM Code Display Setting

A. Use

- To set whether or not to add a jam code to a jam warning display on the control panel when a jam occurs.

B. Procedure

- The default setting is Do Not Display.

Display "Do Not Display"

12.9.22 BootUp Screen

A. Use

- To customize the BootUp Screen displayed upon machine start-up.
- Use this feature when changing the KonicaMinolta logo displayed on the control panel upon start-up to a client company logo or others for client's intended use of the machine.
- Register logo data in the machine's flash ROM via a USB memory device.
  The following are the logo data specifications that should be met.

Image format	: PNG format
File extension	: *. png
File name	: BootupScreen.png
Image size	: 800 x 480 dots
Color	: 256 colors (Palette that the machine specifies is used.)

NOTE

- **When making the logo data, use the exclusive image making tool.**
- **If a USB memory device is not connected or a nonconforming USB memory device is connected, "USB NG" is displayed and logo data cannot be registered.**
- **If the file name of logo data does not conform to the above specifications, "File NG" message is displayed and logo data cannot be registered.**

B. Procedure

1. Save logo data that conforms to the above specifications in the root directory of a USB memory device.

NOTE

- **Be sure to save data in the root directory as the machine cannot detect data saved in other directories.**

2. Connect the USB memory device to the machine USB port.
3. Select the key as follows.
   [System 2] → [▶] → [BootUp Screen].
4. Touch [Set].
5. Check result "OK" is displayed and touch [END].

NOTE

- **If logo data is already registered, new logo data overwrites the existing logo data.**
- **The color of logo data may look different between the machine control panel and some PC screens. After registering logo data, restart the machine and check the color of the logo data on the BootUp screen.**

* To delete registered data, touch [Delete] and check result "OK" is displayed.

12.9.23 Install Data

A. Use

- To install movie help data or OCR dictionary data into HDD.
- To use when the logical format of the hard disk is performed.
- To install each data into the machine HDD via USB memory device.

B. Procedure

NOTE

- **To use OCR function, the optional i-Option LK-105 must be activated.**

1. Save data (*.tar) into the root directory of a USB memory device.
2. Connect the USB memory device to the machine USB port.
3. Select the key as follows.
   [System 2] → [▶] → [Install Data].
4. Touch [Movie Data] or [OCR Dictionary].
   You can select the above two types of data at a time and install them.
5. Touch [Set].
6. Press the Start key to install the data.
7. Check result "OK" is displayed and touch [END].

NOTE

- **If data is already installed, it is necessary to delete old data before installing new one.**

* To delete registered data, select the data to be deleted and touch [Delete]. Check result "OK" is displayed.

12.9.24 Bluetooth Settings

- It will be displayed in bizhub C652/C552 machines where the function version is version 2 or later and in all bizhub C452 machines.

A. Use

- To set whether to enable or disable the Bluetooth function.
- Use this setting upon set-up of the optional local interface kit EK-605.

B. Procedure

- The default setting is Invalid.

Effective "Invalid"

12.10 Counter

- The counter displays the counts of various counters to allow the technical representative to check or set as necessary.

12.10.1 Common procedure

1. Touch [Counter] to show the counter menu.
2. Select the specific counter to be displayed.
3. To clear the counts of two or more counters within a group or across different groups at once, touch [Counter Reset], select the specific counters to be cleared, and touch [END]. Two or more counters can be selected.
   (However, the [Service Call], [Service Total], and [JAM] counters cannot be selected.)

12.10.2 Life

A. Use

- To check the number of hours or times each of the different maintenance parts has been used.
- To clear the count of each counter.
- To perform New Release in fusing unit and transfer belt unit.
- To check how many times maintenance parts have been used.
- When each of the maintenance parts is replaced.

B. Procedure

(1) Counter clear

- To clear the count of a counter, select the specific part and press the Clear key.
- If a counter is cleared mistakenly, press the Interrupt key, which will undo the clearing operation.
- It is not possible to clear the count of the counters for the fusing unit, transfer belt unit, imaging unit and TCR new article detection.
- For the count method of each counter, see the table "Count method of each life counter."

<Count method of each life counter>

Counter item	Counting method
Fusing Unit Rotation Time	• Counts how many hours the fusing unit has turned.
Fusing Unit No. of Printed Page	• Counts how many sheets have been ejected. The counter increases by 1 per every 216 mm in the sub scan direction and shows the total count. For paper length less than 216 mm in the sub scan direction, the counter uses 216 mm as the paper length.
Image Transfer belt Rotation Time	• Counts how many hours the transfer belt unit has turned.

Counter item	Counting method
Image Transfer belt No. of Printed Page	• Counts how many sheets have been ejected. The counter increases by 1 per every 216 mm in the sub scan direction and shows the total count. For paper length less than 216 mm in the sub scan direction, the counter uses 216 mm as the paper length.
Transfer Roller Unit	• Counts how many sheets have been ejected. The counter increases by 1 per every 216 mm in the sub scan direction and shows the total count. For paper length less than 216 mm in the sub scan direction, the counter uses 216 mm as the paper length.
Ozone Filter	• Counts how many hours PC drum/K has turned.
Toner Filter	• Counts how many sheets have been printed. The counter increases by 1 per every 216 mm in the sub scan direction and shows the total count. For paper length less than 216 mm in the sub scan direction, the counter uses 216 mm as the paper length.
1st.	• Number of sheets of paper fed from tray 1
2nd.	• Number of sheets of paper fed from tray 2
3rd.	• Number of sheets of paper fed from tray 3
4th.	• Number of sheets of paper fed from tray 4
Manual Tray	• Number of sheets of paper fed from the bypass
IU Rotation Time (C)	• Counts how many hours PC drum has turned.
IU Rotation Time (M)	
IU Rotation Time (Y)	
IU-DC Rotation Time (K)	• Counts how many hours DC has turned.
Number of Pages Printed by IU (C)	• Counts how many sheets have been printed.
Number of Pages Printed by IU (M)	
Number of Pages Printed by IU (Y)	
Number of Pages Printed by IU-DevC (K)	
LCT Parts	• Number of sheets of paper fed from the LCT
ADF Feed	• Number of sheets of original fed through the take-up section of the ADF
ADF Reverse	• Number of sheets of original fed through the turnover unit of the ADF
Sorter/Finisher	• Number of sheets of paper fed out of the sorter/finisher
TCR new article detection (C)	• Period of time over which the toner cartridge has been used.
TCR new article detection (M)	
TCR new article detection (Y)	
TCR new article detection (K)	

(2) New Release

- After replacing a fusing unit or transfer belt unit, perform New Release to clear its life counter.

1. Select the key as follows.
   [Counter] → [Life] → [New Release].
2. Open the lower front door.
3. Select a unit where New Release is made.
4. Press the Start key and perform New Release.

(3) New Release Disable mode

- To enable a unit that is used temporarily for troubleshooting to be used again as a new unit in another machine, the New Release Disable mode is provided.
- Applicable units are the following units that have the new unit detection feature
  Imaging unit/Y,M,C, drum unit/K, developing unit/K
- See the following page for the method of enabling the New Release Disable mode.
  See P.623

12.10.3 Service Call Counter

A. Use

- To count and display how many times trouble has been detected on a trouble type basis.
- Use this feature to check how many times trouble has occurred.

NOTE

- **In the service call counter list, "Reboot" shows how many times abort code (C-FXXX) has occurred.**

12.10.4 Section Service Call

A. Use

- To count and display how many times trouble has been detected during a certain period, i.e. an interval between service visits, on a trouble type basis.
- Use this feature to check how many times trouble has occurred in a certain period, i.e. an interval between service visits.
- By clearing the counter at the time of visit to your customer, i.e. service visit, you can check how many times trouble has occurred since the previous visit.
  To reset the counter, use [Counter Reset].

NOTE

- **In the zone service call list, "Reboot" shows how many times abort code (C-FXXX) has occurred.**

12.10.5 Warning

A. Use

- To count and display how many times warning code has been detected on a warning code type basis.
- To check the number of warning conditions detected according to the warming type

B. Procedure

- To clear the count of a counter, select the specific part and press the Clear key.
- If a counter is cleared mistakenly, press the Interrupt key, which will undo the clearing operation.
- When a warning condition occurs, an oil mark appears at the lower left corner of the basic screen.
- Touching the oil mark will display the warning code screen.

12.10.6 Maintenance

A. Use

- To set a count value for maintenance of any given part.
- When any given part is replaced.

B. Procedure

Maint.-Set

- Enter the maintenance counter value from the 10-key pad.

Maint.-Count

- The number of sheets that have been ejected is counted up. (1 sided: 1 count, 2 sided: 2 count)
- Pressing the Clear key will clear the count.
- If the count is cleared mistakenly, press the Interrupt key, which will undo the clearing operation.

12.10.7 Service Total

A. Total

(1) Use

- To display the count value for the service total counter.
- Use to check the total No. of printed pages including the ones printed by the Service Mode.

(2) Procedure

Service Total	: No. of pages printed by user mode and Service Mode.
Service Total (Duplex)	: No. of pages printed by user mode and Service Mode in duplex.

B. Paper Size 1/2

(1) Use

- To display the count value for service total counter of each paper size.
- To check the total number of printed pages including the one at Service Mode according to each paper size.
- The count of Paper Size 1 and Paper Size 2 that contain the following paper sizes is provided respectively.

  Paper Size 1: A3, A4, A4S, A5, A6, B4, B5, B5S, B6, Post., 12 x 18, 11 x 17, $8^1/_2$ x 14, $8^1/_2$ x 11, $8^1/_2$ x 11S, $7^1/_4$ x $10^1/_2$, $5^1/_2$ x $8^1/_2$, 4 x 6, Foolscap

  Paper Size 1: 8K, 16K, long Length, Others

12.10.8 Counter of Each Mode

A. Use

- To display the printed pages in the following specified modes; copy, printer, scanner, and fax. It also displays the count value of using the specified mode.
- Use to check the printed pages in the following specified modes; copy, printer, scanner, and fax, as well as No. of times each mode was used, in order to know the using condition.

Copy/printer/scanner counter	: Displays individual counts in copy, printer, and scan mode.
Fax-related counter	: Displays individual counts in fax mode
Counter by finishing option	: Displays individual counts on a finishing option basis.
Stabilization counter	: Displays individual counts on a basis of the factors that cause image stabilization. The counter helps to understand what causes image stabilization and how to improve image stabilization control.
PJ counter	: Jobs that the machine has processed are divided according to the number of pages per job: 1P/J, 2P/J, ... 10P/J, or 11P/J and more. The total number of jobs in each group is counted and displayed separately based on whether job is processed in color, monochrome, or auto color mode. The counter is used to understand how the machine has been used in the field.

12.10.9 Service Call History (Data)

A. Use

- To display the trouble history in chronological order.
- Use to check the trouble history in chronological order.

12.10.10 ADF Paper Pages

A. Use

- To display the No. of pages fed to the automatic document feeder.
- Use to check the No. of pages fed to the automatic document feeder.

12.10.11 Paper Jam History

A. Use

- To display the jam history in chronological order.
- Use to check the jam history in chronological order.

NOTE

- **[Code] displayed on the screen of JAM history indicates JAM code. For details of JAM code, see "Trouble shooting."**
See P.657

12.10.12 Fax Connection Error

A. Use

- To display the No. of fax transmission errors occurred.
- Use to check the No. of fax transmission errors occurred.

12.10.13 Split Line Counter

A. Use

- To display the average number of detected stain on the ADF original glass at the pre-detection.
- Used for checking the number of detected stain on the ADF original glass.

Pre-detect Large Size : Large-sized detected stain divided by the number of times pre-detection is practiced (average number of detected lines) will be displayed.

Pre-detect Small Size : Small-sized detected stain divided by the number of times pre-detection is practiced (average number of detected lines) will be displayed.

Detect Split line in acting : Number of detected stain on the original glass during the original feed divided by the number of scanning by ADF (average number of detected lines) will be displayed.

B. Procedure

- To clear each counter value, select the items to be cleared, and press the Clear key. (When selecting [Pre-detect Large Size] or [Pre-detect Small Size] is selected, both values will be cleared.)
- If the count is cleared mistakenly, press the Interrupt key, which will undo the clearing operation.

12.10.14 Parts Counter (Fixed)

- It will be displayed only when the optional finisher is mounted.

A. Use

- When the optional finisher is mounted, the parts counter screen displays the relevant parts and their counts. When the relevant parts are replaced, their counters need to be reset to update the service history.
- When the optional finisher is mounted, the relevant parts counter can be checked from this menu.
- Service history can be maintained from this menu.

NOTE

- **See the table below for the relevant parts and count method.**

B. Procedure

1. Touch in the order of [Service Mode] → [Counter] → [↑] → [Parts Counter (Fixed)].
2. Check the parts counter or display the relevant part of which counter will be reset.
3. Check the part count.
   To reset the count value, touch the key of the part where the counter is reset. Touch the Clear key.

(1) Fixed parts to be counted

No.	CSRC parameter	Parts name	Parts number	Limit value	Count condition
001	43	FNS 2-Staple Stapler	A07P7901	500,000	1 count for each sheet ejection in both 1 staple and 2 staple mode.
002	44	FNS Center Staple & Fold Stapler	20AK4241	200,000	1 count for each sheet ejection in saddle stitch mode.

No.	CSRC parameter	Parts name	Parts number	Limit value	Count condition
003	—	Stacker Accessory Plate Movement Monitor	56AA8002	3,000,000	1 count for each sheet ejection in front 1 staple, rear 1 staple, 2 staples in sort staple mode as well as shift sort m
004	47	FNS Center press Knife Motor	120H8001	2,000,000	1 count for each sheet ejection in half-fold, saddle stitch, and tri-fold mode
⚠1 005	4A	PI sheet paper feed clutch (Upper)	13QN8201	1,000,000	1 count for each sheet fed from the PI upper tray
⚠1 006	4B	PI sending Roller Pair/A (Upper)	50BA-574	200,000	
⚠1 007	4C	PI sending Roller Pair/B (Upper)	50BA-575	100,000	
⚠1 008	4D	PI Reversal Rubber Pair (Upper)	13QN-443	100,000	
⚠1 009	4E	PI Torque Limiter (Upper)	13QN4073	600,000	
⚠1 010	—	PI Tray Up/Down Motor (Up)	12GQ8002	1,000,000	1 count for each job where paper is fed from the PI upper tray
⚠1 011	—	PI sheet paper feed clutch (Lower)	13QN8201	1,000,000	1 count for each sheet fed from the PI lower tray
⚠1 012	—	PI sending Roller Pair/A (Lower)	50BA-574	200,000	
⚠1 013	51	PI sending Roller Pair/B (Lower)	50BA-575	100,000	
⚠1 014	52	PI Reversal Rubber Pair (Lower)	13QN-443	100,000	
⚠1 015	53	PI Torque Limiter (Lower)	13QN4073	600,000	1 count for each sheet fed from the PI lower tray
⚠1 016	—	PI Tray Up/Down Motor (Down)	12GQ8002	1,000,000	1 count for each job where paper is fed from the PI lower tray
⚠1 017	65	PI Regist	13QN8201	1,000,000	1 count each time a sheet is ejected from PI.
018	66	Punch Motor	A11TR90000	1,000,000	Number of sheets ejected in punch mode
019	—	FNS Output Roller/A	122H4825	300,000	1 count for each sheet ejection to the FNS main tray. 1 count for each sheet ejection in staple mode
020	—	PK Counter	A11T9100 A11T9101 A11T9102	1,000,000	Number of punch kit punching
⚠1 021	—	Punch scrap transportation motor pair	A111A928	1,000,000	Number of punches in ZU (1) 1 count for each sheet printed in punch mode when ZU is installed and PK is not installed. (2) 1 count for each sheet printed in Z-fold and punch modes when ZU and PK are installed.
⚠1 022	—	Punch clutch	13NKK001	1,000,000	

12.10.15 Jam

A. Use

- To count and display how many times jam has been detected on a jam location basis.

12.10.16 Section JAM

- To count and display how many times jam has been detected in a certain period, i.e. an interval between service visits, on a jam location basis.
- Use this feature to check how many times jam has occurred in a certain period, i.e. an interval between service visits.
- By clearing the jam counter at the time of visit to your customer site, i.e. service visit, you can check how many times jam has occurred since the previous visit.
  To reset the counter, use [Counter Clear].

12.11 List Output

12.11.1 Machine Management List

A. Use

- To produce an output of a list of setting values, adjustment values, total counter values, and others.
- At the end of setup or when a malfunction occurs.

B. Procedure

- Load the A4S plain paper to a paper source.
- Press the Start key, which will let the machine produce the list.
- The time-of-day and date will also be printed.

12.11.2 Adjustment List

A. Use

- To output the adjustment list for machine adjustment, process adjustment, etc. in Service Mode.
- At the end of setup or when a malfunction occurs.

B. Procedure

- Load the A4S plain paper to a paper source.
- Press the Start key, which will let the machine produce the list.
- The time-of-day and date will also be printed.

12.11.3 Parameter List

- For details, see FK-502 Service Manual.

12.11.4 Service Parameter

- For details, see FK-502 Service Manual.

12.11.5 Protocol Trace

- For details, see FK-502 Service Manual.

12.11.6 Fax Setting List

- For details, see FK-502 Service Manual.

12.11.7 Fax Analysis List

- For details, see FK-502 Service Manual.

12.12 State Confirmation

12.12.1 Sensor Check

A. Use

- To display the states of the input ports of sensors and switches when the machine remains stationary.
- Used for troubleshooting when a malfunction or a misfeed occurs.

B. Procedure

- The operation of each of the switches and sensors can be checked on a real-time basis.
- It can be checked as long as the 5-V power line remains intact even when a door is open.

(1) Electrical components check procedure through input data check

- When a paper misfeed occurs in the paper feed section of the machine, the tray 2 paper feed sensor is considered to be responsible for it.

1. Remove the sheet of paper misfed.
2. From the sensor check list that follows, check the panel display of the tray 2 paper feed sensor. For the tray 2 paper feed sensor, you check the data of “Paper feed” of “Tray 2.”
3. Call the Service Mode to the screen.
4. Select [State Confirmation] → [Sensor Check] and then select the screen that contains “Paper feed” under “Tray 2.” For “Paper feed” under “Tray 2,” select “1” on the left-hand side of the screen.
5. Check that the data for “Paper feed” under “Tray 2” is “0” (sensor blocked).
6. Move the actuator to unblock the tray 2 paper feed sensor.
7. Check that the data for “Paper feed” under “Tray 2” changes from “0” to “1” on the screen.
8. If the input data is “0,” change the sensor.

12.12.2 Sensor check screens

- These are only typical screens which may be different from what are shown on each individual machine.

A. Sensor monitor

(1) Sensor monitor 1,2

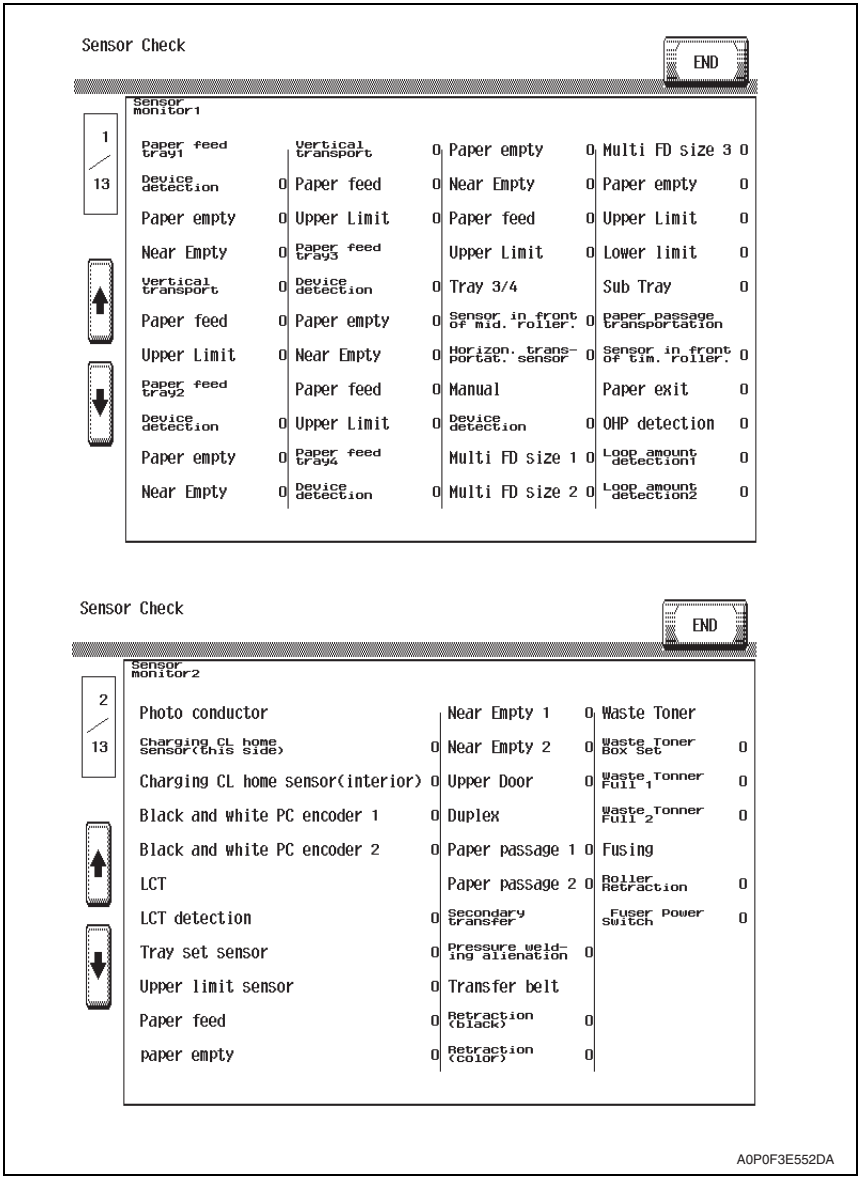

(2) Sensor monitor 3,4

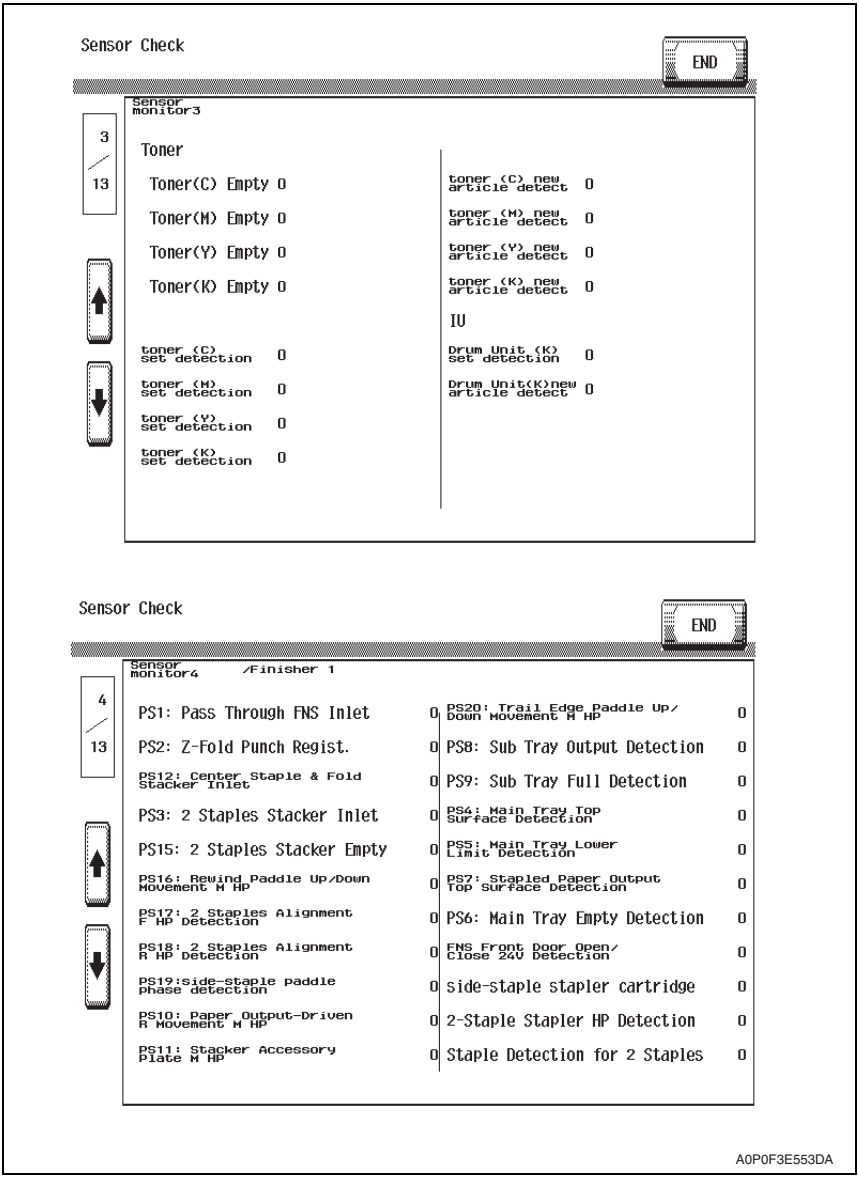

(3) Sensor monitor 5,6

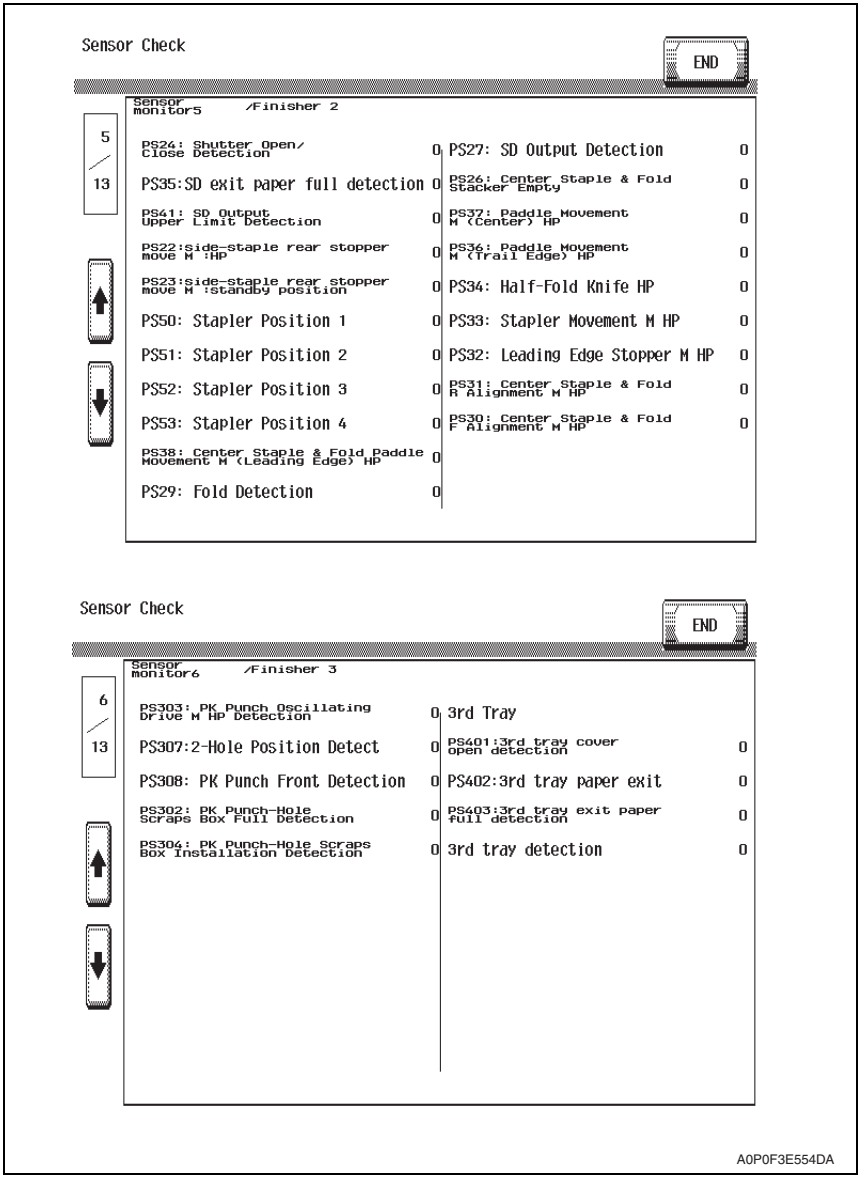

A0P0F3E554DA

(4) Sensor monitor 7,8

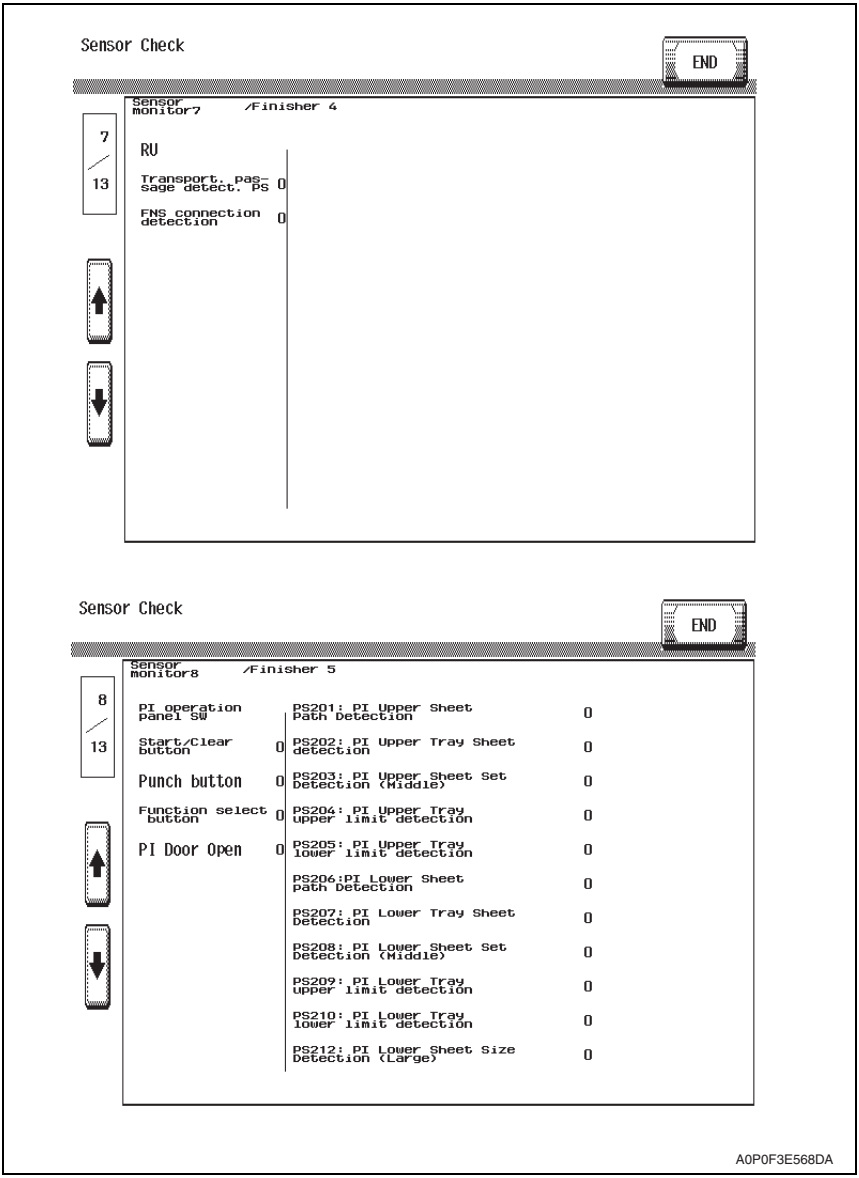

(5) Sensor monitor 9,10

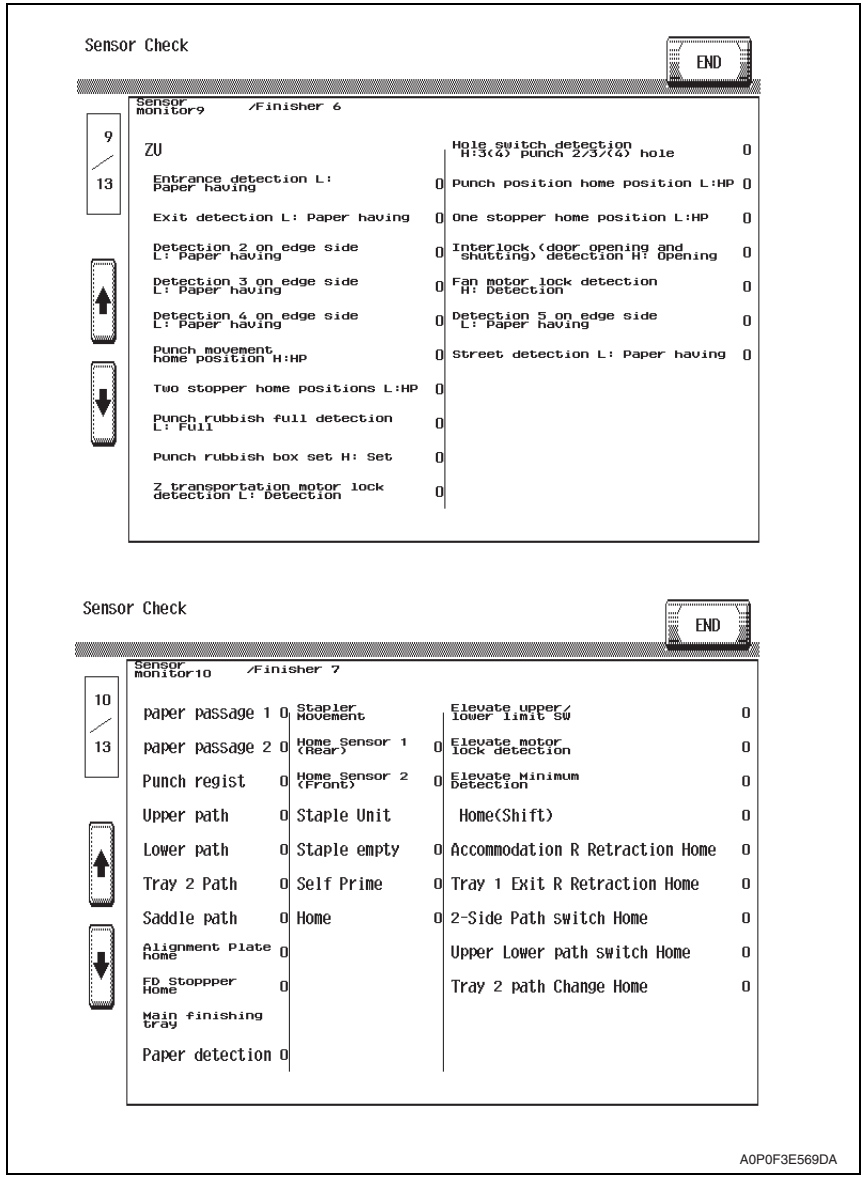

A0P0F3E569DA

(6) Sensor monitor 11,12

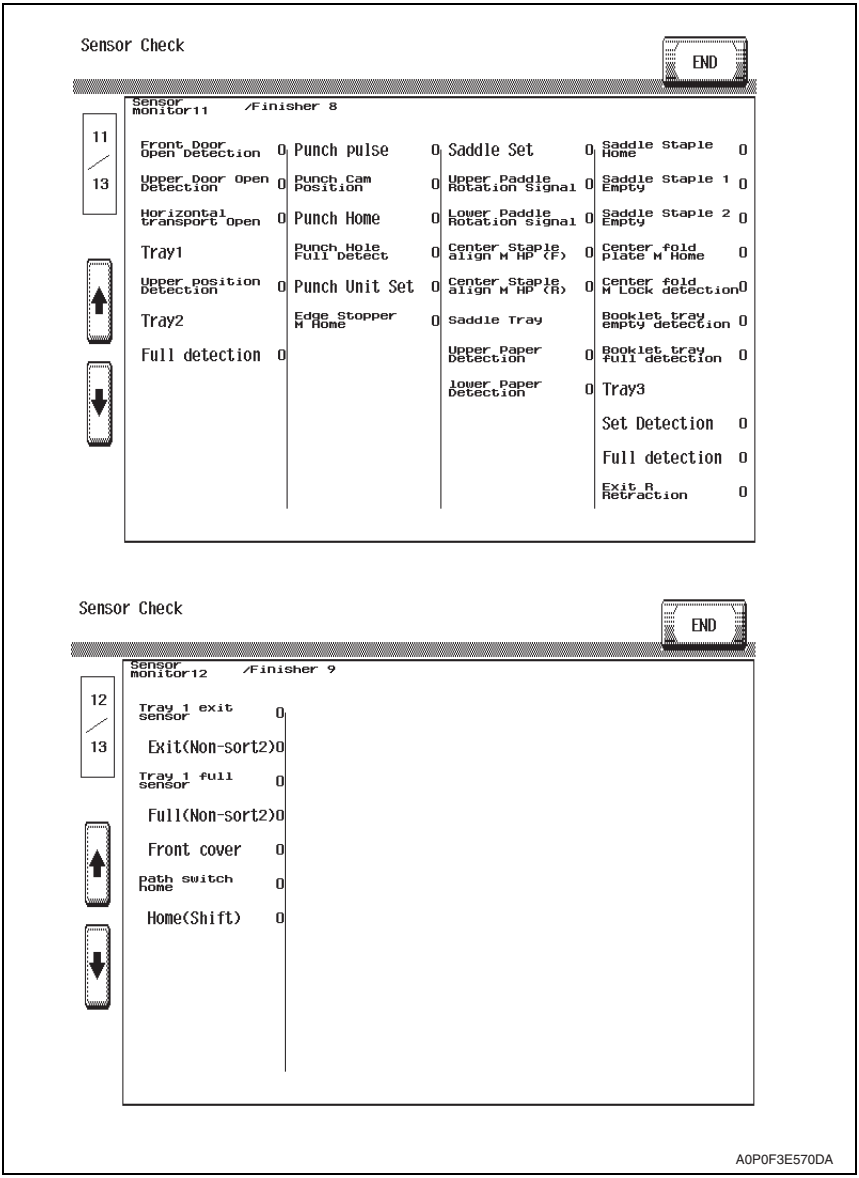

A0P0F3E570DA

(7) Sensor monitor 13

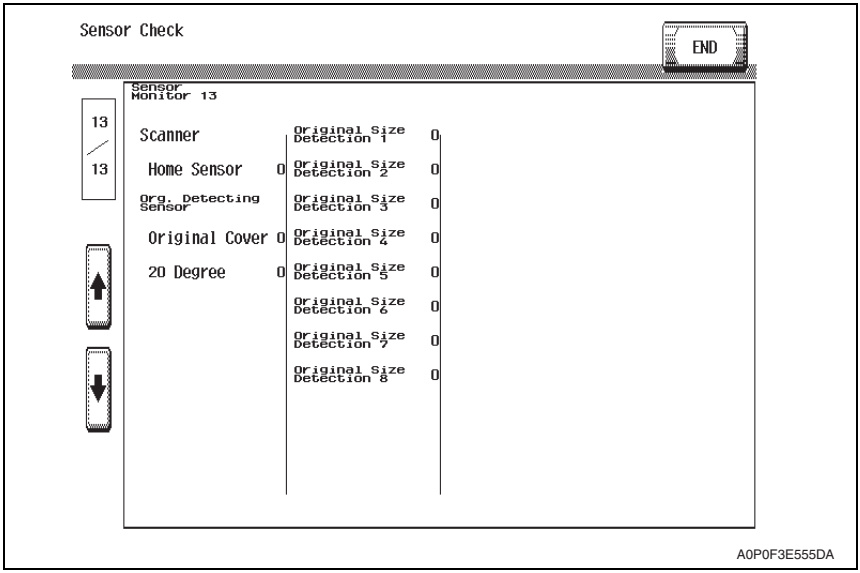

12.12.3 Sensor check list

A. Sensor monitor

(1) Sensor monitor 1 (Main body)

Symbol	Panel display	Part/signal name	Operation characteristics/panel display	
			1	0
	Paper feed tray 1			
PS1	Device detection	Tray 1 device detection sensor	In position	Out of position
PS2	Paper empty	Tray 1 paper empty sensor	Paper not present	Paper present
PS3	Near Empty	Tray 1 near empty sensor	Blocked	Unblocked
PS4	Vertical transport	Tray 1 vertical transport sensor	Paper present	Paper not present
PS5	Paper feed	Tray 1 paper feed sensor	Paper present	Paper not present
PS6	Upper Limit	Tray 1 upper limit sensor	At raised position	Not at raised position
	Paper feed tray 2			
PS9	Device detection	Tray 2 device detection sensor	In position	Out of position
PS10	Paper empty	Tray 2 paper empty sensor	Paper not present	Paper present
PS11	Near Empty	Tray 2 near empty sensor	Blocked	Unblocked
PS12	Vertical transport	Tray 2 vertical transport sensor	Paper present	Paper not present
PS13	Paper feed	Tray 2 paper feed sensor	Paper present	Paper not present
PS14	Upper Limit	Tray 2 upper limit sensor	At raised position	Not at raised position
	Paper feed tray 3			
—	Device detection	—	In position	Out of position
PS19	Paper empty	Tray 3 paper empty sensor	Paper not present	Paper present
PS22	Near Empty	Tray 3 near empty sensor	Blocked	Unblocked
PS21	Paper feed	Tray 3 paper feed sensor	Paper present	Paper not present
PS20	Upper Limit	Tray 3 upper limit sensor	At raised position	Not at raised position
	Paper feed tray 4			
—	Device detection	—	In position	Out of position
PS24	Paper empty	Tray 4 paper empty sensor	Paper not present	Paper present

Symbol	Panel display	Part/signal name	Operation characteristics/panel display	
			1	0
PS27	Near Empty	Tray 4 near empty sensor	Blocked	Unblocked
PS26	Paper feed	Tray 4 paper feed sensor	Paper present	Paper not present
PS25	Upper Limit	Tray 4 upper limit sensor	At raised position	Not at raised position
	Tray 3/4			
PS28	Sensor in front of mid. roller.	Intermediate roller sensor	Paper present	Paper not present
PS29	Horizon. Transportat. sensor	Horizontal transport sensor	Paper present	Paper not present
	Manual			
PS30	Device detection	Bypass set sensor	Blocked	Unblocked
PS31	Multi FD size 1	Multi FD size sensor/1	ON	OFF
PS32	Multi FD size 2	Multi FD size sensor/2	ON	OFF
PS33	Multi FD size 3	Multi FD size sensor/3	ON	OFF
PS34	Paper empty	Bypass paper empty sensor	At raised position	Not at raised position
PS35	Upper Limit	Bypass paper limit sensor	At raised position	Not at raised position
PS36	Lower Limit	Bypass paper lower sensor	At lower limit position	Not at lower limit position
PS37	Sub Tray	Bypass sub tray set sensor	Blocked	Unblocked
	Paper passage transportation			
PS38	Sensor in front of tim. roller.	Timing roller sensor	Paper present	Paper not present
PS39	Paper exit	Paper exit sensor	Paper present	Paper not present
PS40	OHP detection	OHP detection sensor	OHP	Not OHP
PS41	Loop amount detection 1	Loop amount detection sensor/1	Loop present	Loop not present
PS42	Loop amount detection 2	Loop amount detection sensor/2	Loop present	Loop not present

(2) Sensor monitor 2 (Main body, LCT)

Symbol	Panel display	Part/signal name	Operation characteristics/panel display	
			1	0
	Photo conductor			
PS43	Charging CL home sensor (this side)	Charging cleaner home sensor	Blocked	Unblocked
PS44	Charging CL home sensor (interior)	Charging cleaner return sensor	Blocked	Unblocked
PS45	Black and white PC encoder 1	K PC encoder sensor/1	Blocked	Unblocked
PS46	Black and white PC encoder 2	K PC encoder sensor/2	Blocked	Unblocked
	LCT			
—	LCT detection	LCT identification signal	Connection	No connection
PS1	Tray set sensor	LU-204: Tray set sensor/1 LU-301: Tray set sensor	In position	Out of position
PS2	Upper limit sensor	Upper limit sensor	At raised position (Blocked)	Not at raised position (Unblocked)
PS3	Paper feed	Paper feed sensor	Paper present	Paper not present
PS4	paper empty	Paper empty sensor	Paper not present	Paper present
PS5	Near empty 1	Near empty sensor /1	Blocked	Unblocked
PS6	Near empty 2	Near empty sensor /2	Blocked	Unblocked
MS1	Upper Door	LU door switch	Close	Open
	Duplex			
PS47	Paper passage1	ADU paper passage sensor/1	Paper present	Paper not present
PS48	Paper passage 2	ADU paper passage sensor/2	Paper present	Paper not present
	Secondary transfer			
PS50	Pressure welding alienation	Pressure welding alienation sensor	Not Retracted	Retracted
	Transfer belt			
PS51	Retraction (black)	Pressure welding alienation sensor/K	Not Retracted	Retracted
PS52	Retraction (color)	Pressure welding alienation sensor/color	Not Retracted	Retracted
	Waste toner			
PS53	Waste Toner Box Set	Waste toner box set sensor	Blocked	Unblocked
—	Waste Toner Full 1	• Not used.		
PS54	Waste Toner Full 2	Waste toner full sensor/1	Blocked	Unblocked
	Fusing			

Symbol	Panel display	Part/signal name	Operation characteristics/panel display	
			1	0
PS55	Roller retraction	Pressure home sensor	Not Retracted	Retracted
—	Fuser Power Switch	—	No electricity restrictions	Electricity restrictions

(3) Sensor monitor 3 (Main body, LCT)

Symbol	Panel display	Part/signal name	Operation characteristics/panel display	
			1	0
	Toner			
RS/C	Toner (C) Empty	Toner empty sensor/C	Toner not present	Toner present
RS/M	Toner (M) Empty	Toner empty sensor/M	Toner not present	Toner present
RS/Y	Toner (Y) Empty	Toner empty sensor/Y	Toner not present	Toner present
PZS/K	Toner (K) Empty	Toner empty sensor/K	Toner not present	Toner present
TCB/C	Toner (C) set detection	Toner cartridge set board/C	In position	Out of position
TCB/M	Toner (M) set detection	Toner cartridge set board/M	In position	Out of position
TCB/Y	Toner (Y) set detection	Toner cartridge set board/Y	In position	Out of position
TCB/K	Toner (K) set detection	Toner cartridge set board/K	In position	Out of position
—	Toner (C) new article detect	—	New article	Not a new article
—	Toner (M) new article detect	—	New article	Not a new article
—	Toner (Y) new article detect	—	New article	Not a new article
—	Toner (K) new article detect	—	New article	Not a new article
	IU			
—	Drum Unit (K) set detection	—	In position	Out of position
—	Drum Unit (K) new article detect	—	New article	Not a new article

(4) Sensor monitor 4 (FS-526)

Symbol	Panel display	Part/signal name	Operation characteristics/panel display	
			1	0
	Finisher 1			
PS1	Pass Through FNS Inlet	FNS pass sensor	Paper present	Paper not present
PS2	Z-Fold Punch Regist.	Z-fold Punch regist sensor	Paper present	Paper not present
PS12	Center Staple & Fold Stacker Inlet	Center staple pass sensor	Paper present	Paper not present
PS3	2 Staples Stacker Inlet	2 staples stacker sensor	Paper present	Paper not present
PS15	2 Staples Stacker Empty	2 staples stacker empty sensor	Paper not present	Paper present
PS16	Rewind Paddle Up/Down Movement M HP	Rewind paddle home sensor	At home	Not at home
PS17	2 Staples Alignment F HP Detection	2 staples alignment motor home sensor/F	At home	Not at home
PS18	2 Staples Alignment R HP Detection	2 staples alignment motor home sensor/R	At home	Not at home
PS19	Side-staple paddle phase detection	2 staples paddle phase sensor	Blocked	Unblocked
PS10	Paper Output-Driven R Movement M HP	Paper output roller home sensor	At home	Not at home
PS11	Stacker Accessory Plate M HP	Stacker plate home sensor	At home	Not at home
PS20	Trail Edge Paddle up/Down Movement M HP	Trail edge paddle home sensor	At home	Not at home
PS8	Sub Tray Output Detection	Sub tray exit sensor	Paper present	Paper not present
PS9	Sub Tray Full Detection	Sub tray full sensor	Full	Other than full
PS4	Main Tray Top Surface Detection	Main tray top surface sensor	Upper limit	Not at upper limit
PS5	Main Tray Lower Limit Detection	Main tray lower limit sensor	Lower limit	Not at lower limit
PS7	Stapled Paper Output Top Surface Detection	Staple paper exit top surface sensor	Blocked	Unblocked
PS6	Main Tray Empty Detection	Main tray empty sensor	Blocked	Unblocked

Symbol	Panel display	Part/signal name	Operation characteristics/panel display	
			1	0
PS201	FNS Front Door open/Close 24V Detection	Door open/close sensor	Open	Close
—	Side-staple stapler cartridge	—	50 sheets (Blocked)	100 sheets (Unblocked)
—	2-staple stapler HP Detection	—	At home	Not at home
—	Staple Detection for 2 staples	—	Staple	No staple

(5) Sensor monitor 5 (FS-526, SD-508)

Symbol	Panel display	Part/signal name	Operation characteristics/panel display	
			1	0
	Finisher 2			
PS24	Shutter open/close Detection	Shutter open/close sensor	Close	Open
PS35	SD exit paper full detection	SD exit full sensor	Full	Other than full
PS41	SD output Upper Limit Detection	SD exit upper limit sensor	Upper limit	Not at upper limit
PS22	Side-staple rear stopper move M :HP	2 staples trail edge stopper home sensor	At home	Not at home
PS23	side-staple rear stopper move M :standby position	2 staples trail edge stopper standby sensor	Standby position	Other than standby position
PS50	Stapler Position 1	Stapler position sensor/1	Blocked	Unblocked
PS51	Stapler Position 2	Stapler position sensor/2	Blocked	Unblocked
PS52	Stapler Position 3	Stapler position sensor/3	Blocked	Unblocked
PS53	Stapler Position 4	Stapler position sensor/4	Blocked	Unblocked
PS27	Fold Detection	Fold sensor	Paper present	Paper not present
PS28 PS29	SD Output Detection	SD exit sensor/LED SD exit sensor/PR	Paper present	Paper not present
PS26	Center Staple & Fold Stacker Empty	Center staple stacker empty sensor/1	Paper not present	Paper present
PS37	Paddle Movement M (Center) HP	Paddle home sensor/C	At home	Not at home
PS34	Half-Fold knife HP	Center fold knife home sensor	At home	Not at home
PS33	Stapler Movement M HP	Stapler home sensor	At home	Not at home
PS32	Leading Edge Stopper M HP	Leading edge stopper home sensor	At home	Not at home

Symbol	Panel display	Part/signal name	Operation characteristics/panel display	
			1	0
PS31	Center Staple & Fold R Alignment M HP	Center staple alignment motor home sensor/R	At home	Not at home
PS30	Center Staple & Fold F Alignment M HP	Center staple alignment motor home sensor/F	At home	Not at home

⚠1 (6) Sensor monitor 6 (PK-516, JS-602)

Symbol	Panel display	Part/signal name	Operation characteristics/panel display	
			1	0
	Finisher 3			
PS303	PK Punch Oscillating Drive M HP Detection	PK punch oscillating home sensor	At home	Not at home
PS307	2-Hole Position Detect	2 hole position sensor	3 holes (4 holes)	
PS308	PK Punch Front Detection	PK punch front sensor	Blocked	Unblocked
PS302	PK Punch-Hole Scraps Box Full Detection	PK punch scraps box full sensor	Full	Other than full
PS304	PK Punch-Hole Scraps Box Installation Detection	PK punch scraps box set sensor	Set	Not set
PS401	3rd tray cover open detection	Job tray cover sensor	Open	Closed
PS402	3rd tray paper exit	Job tray paper exit sensor	Paper present	Paper not present
PS403	3rd tray exit paper full detection	Job tray full sensor	Full	Other than full
—	3rd tray detection	—	Set	Not set

⚠1 (7) Sensor monitor 7 (ZU-606)

Symbol	Panel display	Part/signal name	Operation characteristics/panel display	
			1	0
	Finisher 4			
PS202	Transport. passage detect. PS	Paper pass sensor	Paper present	Paper not present
—	FNS connection detection	FNS connection signal	Connected	Unconnected

(8) Sensor monitor 8 (PI-505)

Symbol	Panel display	Part/signal name	Operation characteristics/panel display	
			1	0
	Finisher 5			
	PI operation panel SW			
—	Start/Clear button	Post inserter unit manual start/clear SW	OFF	ON
—	Punch button	Post inserter unit manual punch button SW	OFF	ON
—	Function select button	Post inserter unit manual function selection button SW	OFF	ON
MS205	PI Door Open	Upper door open/close switch	Open	Close
PS201	PI Upper Sheet Path Detection	Paper entrance sensor /Up	Paper present	Paper not present
PS202	PI Upper Tray Sheet detection	Paper empty sensor /Up	Paper present	Paper not present
PS203	PI Upper Sheet set Detection (Middle)	Paper set sensor /Up	Paper present	Paper not present
PS204	PI Upper Tray Upper limit detection	Tray upper limit sensor /Up	At upper limit position	Not at upper limit position
PS205	PI Upper Tray lower limit detection	Tray lower limit sensor /Up	At lower limit position	Not at lower limit position
PS206	PI Lower Tray Sheet Detection	Paper entrance sensor /Lw	Paper present	Paper not present
PS207	PI Lower Tray Sheet Detection	Paper empty sensor /Lw	Paper present	Paper not present
PS208	PI Lower Sheet Set Detection (Middle)	Paper set sensor /Lw	Paper present	Paper not present
PS209	PI Lower Tray upper limit detection	Tray upper limit sensor /Lw	At upper limit position	Not at upper limit position
PS210	PI Lower Tray lower limit detection	Tray lower limit sensor /Lw	At lower limit position	Not at lower limit position
PS212	PI Lower Sheet Size Detection (Large)	L size sensor /Lw	Paper present	Paper not present

(9) Sensor monitor 9 (ZU-606)

Symbol	Panel display	Part/signal name	Operation characteristics/panel display	
			1	0
	Finisher 6			
	ZU			
PSDTB	Entrance detection L: Paper having	Paper size detect board	Paper not present	Paper present
PS609	Exit detection L: Paper having	Exit sensor	Paper not present	Paper present
PSDTB	Detection 2 on edge side L: Paper having	Paper size detect board	Paper not present	Paper present
PSDTB	Detection 3 on edge side L: Paper having	Paper size detect board	Paper not present	Paper present
PSDTB	Detection 4 on edge side L: Paper having	Paper size detect board	Paper not present	Paper present
PS605	Punch movement home position H: HP	Punch shift home sensor	Paper not present	Paper present
PS604	Two stopper home positions L: HP	2nd folding stopper home sensor	At home	Not at home
PS608	Punch rubbish full detection L: Full	Punch scraps full sensor	Not at home	At home
PS607	Punch rubbish box set H: Set	Punch scraps box set sensor	Set	Other than set
PS610	Z transportation motor lock detection L: Detection	Conveyance encoder sensor	Other than lock	Lock
MS601	Hole switch detection H:3(4) punch 2/3(4) hole	Punch switchover switch	3(/4) holes	2 holes
PS606	Punch position home position L:HP	Punch home sensor	Not at home	At home
PS603	One stopper home position L:HP	1st folding stopper home sensor	Not at home	At home
ACSW1	Interlock (door opening and shutting) detection H: Opening	Door switch	Open	Closed
FM601	Fan motor lock detection H: Detection	Main motor cooling fan	Detection	Other than detection
PSDTB	Detection 5 on edge Side L: Paper having	Paper size detect board	Paper not present	Paper present

Symbol	Panel display	Part/signal name	Operation characteristics/panel display	
			1	0
PS601	Sheet detection L: Paper having	Conveyance sensor	Paper not present	Paper present

(10) Sensor monitor 10 (FS-527)

NOTE

- **"Tray 1" indicates the tray 2 (lower) and "Tray 2" is the tray 1 (upper) shown on the panel.**

Symbol	Panel display	Part/signal name	Operation characteristics/panel display	
			1	0
	Finisher 7			
PS1	paper passage 1	Paper passage sensor/1	Paper present	Paper not present
PS2	paper passage 2	Paper passage sensor/2	Paper present	Paper not present
PS10	Punch regist	Registration sensor	Paper present	Paper not present
PS8	Upper path	Upper path sensor	Paper present	Paper not present
PS9	Lower path	lower path sensor	Paper present	Paper not present
PS6	Tray 2 Path	Tray1 path sensor	Paper present	Paper not present
PS11	Saddle path	Saddle path sensor	Paper present	Paper not present
PS17	Alignment Plate home	Alignment plate home sensor	At home	Not at home
PS20	FD Stopper Home	Leading edge stopper home sensor	At home	Not at home
	Main finishing tray			
PS16	Paper detection	Tray2 paper detection sensor	Paper present	Paper not present
	Stapler Movement			
PS18	Home Sensor 1 (Rear)	Stapler home sensor/1	At home	Not at home
PS19	Home Sensor 2 (Front)	Stapler home sensor/2	At home	Not at home
	Staple Unit			
—	Staple empty	—	No staple	Staple
—	Self Prime	—	Staple	No staple
—	Home	—	At home	Not at home
SW2	Elevate upper/ lower limit SW	Tray2 upper position switch	At lower limit position	Not at lower limit position
SW3		Tray2 lower position switch		

Symbol	Panel display	Part/signal name	Operation characteristics/panel display	
			1	0
M15	Elevate motor lock detection	Elevate motor	Lock	Other than lock
PS21	Elevate Minimum Detection	Tray2 lower position sensor	At lower limit position	Not at lower limit position
PS25	Home(Shift)	Tray2 shift home sensor	Rear	Front
PS13	Accommodation R Retraction home	Accommodation roller pressure sensor	No electricity restrictions	Electricity restrictions
PS12	Tray 1 Exit R Retraction Home	Exit roller pressure sensor	No electricity restrictions	Electricity restrictions
PS3	2-Side Path switch Home	Duplex path switching sensor	Duplex	Not duplex
PS26	Upper Lower path switch Home	Upper lower path switching sensor	Upper path	Lower path
PS7	Tray 2 path Change Home	Tray1 path switching home sensor	Tray 1	Upper path

(11) Sensor monitor 11 (FS-527/SD-509/PK-517/JS-603)

NOTE

- **"Tray 1" indicates the tray 2 (lower) and "Tray 2" is the tray 1 (upper) shown on the panel.**

Symbol	Panel display	Part/signal name	Operation characteristics/panel display	
			1	0
	Finisher 8			
SW1	Front Door Open Detection	Front door switch	Closed	Open
PS14	Upper Door Open Detection	Upper door sensor	Closed	Open
PS5	Horizontal transport open	Horizontal conveyance cover sensor	Closed	Open
	Tray1			
PS24	Upper position Detection	Tray2 upper position sensor	Top detected	Other than top detected
	Tray2			
PS22	Full detection	Tray1 full sensor	Full	Other than full
PS300	Punch pulse	Punch pulse sensor/1	ON	OFF
PS200	Punch Cam position	Punch cam position sensor	At home	Not at home
PS100	Punch Home	Punch home sensor/1	At home	Not at home
PS30	Punch Hole Full Detect	Punch hole full sensor	Full	Other than full
—	Punch Unit Set	—	Set	Other than set
PS45	Edge Stopper M Home	Leading edge stopper home sensor	At home	Not at home
—	Saddle Set	—	Set	Other than set
M21	Upper Paddle Rotation Signal	Upper paddle motor	ON	OFF
M22	Lower Paddle Rotation Signal	Lower paddle motor	ON	OFF
PS42	Center Staple align M HP (F)	Center staple alignment home sensor/F	At home	Not at home
PS41	Center Staple align M HP (R)	Center staple alignment home sensor/R	At home	Not at home
	Saddle Tray			
PS43	Upper Paper Detection	Paper detection sensor/1	Staple	No staple
PS44	Lower Paper Detection	Paper detection sensor/2	Staple	No staple

Symbol	Panel display	Part/signal name	Operation characteristics/panel display	
			1	0
—	Saddle Staple Home	—	At home	Not at home
—	Saddle staple 1 Empty	—	Staple	No staple
—	Saddle staple 2 Empty	—	Staple	No staple
PS47	Center fold plate M Home	Center fold plate home sensor	At home	Not at home
M25	Center fold M Lock detection	Center fold roller motor	Lock	Other than lock
PS48	Booklet tray empty detection	Booklet tray near full sensor	Paper present	Paper not present
PS50	Booklet tray full detection	Booklet tray full sensor	Paper present	Paper not present
	Tray 3			
—	Set Detection	—	Set	Other than set
PS36	Full detection	Tray3 full sensor	Full	Other than full
PS35	Exit R Retraction	Tray3 exit roller retraction sensor	No electricity restrictions	Electricity restrictions

⚠1 (12) Sensor monitor 12 (JS-504)

Symbol	Panel display	Part/signal name	Operation characteristics/panel display	
			1	0
	Finisher 9			
PS1	Tray 1 exit sensor	Lower tray exit sensor	Paper present	Paper not present
PS2	Exit(Non-sort2)	Upper tray exit sensor	Paper present	Paper not present
T1FDTB/ LED	Tray 1 full sensor	Lower tray paper full detect board/LED	Full	Other than full
T2FDTB/ LED	Full(Non-sort2)	Upper tray paper full detect board/LED	Full	Other than full
PS3	Front cover	Front door sensor	Closed	Open
PS4	path switch home	Route change home sensor	At home	Not at home
PS6	Home(Shift)	Route change home sensor	At home	Not at home

(13) Sensor monitor 13 (Scanner section of the main body)

Symbol	Panel display	Part/signal name	Operation characteristics/panel display	
			1	0
	Scanner			
PS201	Home Sensor	Scanner home sensor	At home	Out of home
	Org. Detecting Sensor			
S201	Original Cover	Original cover sensor	Lowered	Raised
PS202	20 Degree	15 degree sensor	Less than 20 degree	20 degree or more
PS204	Original Size Detection 1	Original size detection 1 sensor	Original loaded, not mounted	Original not loaded
PS205	Original Size Detection 2	Original size detection 2 sensor	Original loaded, not mounted	Original not loaded
—	Original Size Detection 3	Not used	—	—
—	Original Size Detection 4	Not used	—	—
—	Original Size Detection 5	Not used	—	—
—	Original Size Detection 6	Not used	—	—
—	Original Size Detection 7	Not used	—	—
—	Original Size Detection 8	Not used	—	—

12.12.4 Table Number

A. Use

- When IDC is detected, for plain paper, Thick 1/1+, Thick 2/3/4, and Black, the machine independently displays each Vg/Vdc output value that is calculated based on the density (toner amount stuck on the belt) of the test pattern created on the transfer belt.
- Used for troubleshooting of image problems.
- Reference values: C, M, Y K Vdc: around 400 V, Vg: around 500 V

B. Procedure

- If the value is high, correct so that the image density becomes low.
- If the value is low, correct so that the image density becomes high.

12.12.5 Level History1

A. Use

- To display TCR (T/C ratio), IDC/registration sensor output values, and fusing temperature.
- Used for troubleshooting of image problems.

B. Procedure

- TCR-C/-M/-Y/-K : Shows the T/C output reading taken last.
- IDC1/IDC2 : Shows the latest IDC data.
- Middle heat temperature : Displays the latest temperature on the middle of the heating roller.
- Heat. Protect Temperature : Displays the latest temperature of the heating protection.
- Heat edge temperature : Displays the latest temperature at the edges of the heating roller.
- Soaking side temperature : Displays the latest temperature of the soaking roller.
- NC sensor temperature : Displays the temperature detected by NC sensor.

"Reading taken last" means

- Density of toner of the latest image
- When a test print is produced by pressing the Start key while level history 1 is being displayed.

12.12.6 Level History 2

A. Use

- IDC Sensor (Transfer belt bare surface level) as adjusted through the image stabilization sequence and ATVC value.
- Used for troubleshooting of image problems.

B. Procedure

- IDC Sensor : Shows the intensity adjustment value (0 to 255) of the IDC sensor.
- ATVC (C, M, Y, K) : Shows the first image transfer ATVC adjustment value (10 to 100 μA).
- ATVC (2nd) : Shows the second image transfer ATVC adjustment value (300 to 5000 V).

12.12.7 Temp. & Humidity

A. Use

- To display the temperature, humidity and paper temperature of a specific location (IDC sensor portion) inside the machine.
- Used as reference information when a malfunction occurs.

B. Procedure

- Temp-Inside : 0 to 100 °C in 1 °C increments
- Humidity : 0 to 100 % in 1 % increments
- Absolute Humidity : 0 to 100 in 1 increments
- Paper Temp. : 0 to 100 °C in 1 °C increments

12.12.8 CCD Check

A. Use

- To display the D/A value of CCD clamp/gain for R, G, and B.
- Used for troubleshooting for the CCD sensor.

B. Procedure

- Use the following guidelines on the correct range of values.
  CLAMP: The difference between the max. and min. output values should be within ±100.
  GAIN : The difference from the CLAMP values (R, B) should be within (90 for R and B. The difference from the CLAMP value (G) should be within ±50 for G.
  The difference between each pair of RO and RE, GO and GE, and BO and BE should be within 30.

12.12.9 Memory/HDD Adj.-Memory Check

A. Use

- To check correspondence of data written to and that read from memory through write/read check.
- If the copy image is faulty.

Rough Check

- A check is made to see if the image data reading and writing are correctly made in a very limited area.
- The progress of the check sequence is displayed in percentage.

Detail Check

- A check is made to see if the image data reading and writing are correctly made at the addresses and buses in all areas.
- The progress of the check sequence is displayed in percentage.

B. Procedure

1. Call the Service Mode to the screen.
2. Touch these keys in this order: [State Confirmation] → [Memory / HDD Adj.] → [Memory Check].
3. Select the desired type of check, either [Rough Check] or [Detail Check].
4. Press the Start key to start the check procedure.
5. When the check procedure is completed, the results are shown on the screen.
   If the check results are NG, check the memory for connection or replace the memory with a new one.

✻ Press the Stop key to interrupt the check sequence.

12.12.10 Memory/HDD Adj.-Compress / Decompression Check

A. Use

- To check whether compression and decompression are carried out properly.
- If the copy image is faulty.

B. Procedure

1. Call the Service Mode to the screen.
2. Touch these keys in this order: [State Confirmation] → [Memory / HDD Adj.] → [Compress / Decompression Check].
3. Pressing the Start key will automatically start to complete a compression/decompression check sequence.
4. The check result will be displayed.

12.12.11 Memory/HDD Adj.-Memory Bus Check

A. Use

- To check to see if image data is correctly transferred from scanner to memory, and from memory to printer.
- Bus check between scanner and memory has two steps; the scanner internal check step as internal processing and the check step between scanner and memory. If either of the two steps is NG, NG1 or NG2 is displayed respectively.
- If the print image is faulty.

B. Procedure

1. Call the Service Mode to the screen.
2. Touch these keys in this order: [State Confirmation] → [Memory / HDD Adj.] → [Memory Bus Check].
3. Select either [Scanner → Memory], [Memory → PRT], or both.
4. Pressing the Start key will start the memory bus check and be terminated automatically.
5. The check result will be displayed, [OK] or [NG].

⚠1 12.12.12 Memory/HDD Adj.-DSC Bus Check

- It will be displayed in bizhub C652/C552 machines where the function version is version 2 or later and in all bizhub C452 machines.

A. Use

- To check the connection between the DSC board and the scanner section when the optional security kit SC-507 is installed.
- When an error is detected after checking, NG1 or NG2 is displayed depending on the location of the board where the defect is found.

B. Procedure

1. Call the Service Mode to the screen.
2. Touch these keys in this order: [State Confirmation] → [Memory / HDD Adj.] → [DSC Bus Check].
3. Touch [Scanner → DSC].
4. Pressing the Start key will start the DSC bus check and be terminated automatically.
5. The check result will be displayed.

12.12.13 Memory/HDD Adj.-HDD R/W Check

A. Use

- To check to see if the hard disk is connected properly, and if read/write operation of the hard disk is correctly performed.
- When the hard disk is mounted.

B. Procedure

1. Call the Service Mode to the screen.
2. Touch these keys in this order: [State Confirmation] → [Memory / HDD Adj.] → [HDD R/W Check].
3. Pressing the Start key will start the hard disk R/W check sequence and be terminated automatically.
4. The check result will be displayed, [OK] or [NG].

12.12.14 Memory/HDD Adj.-HDD Format

A. Use

- To format the hard disk.
- The function proceeds in the order of physical format to logical format.
- If the hard disk is yet to be formatted, the malfunction code “C-D010” will appear. Ignore this code and continue with the formatting procedure.
- When the hard disk is mounted.
- When the hard disk is to be initialized. (Physical format to logical format)

B. Procedure

1. Call the Service Mode to the screen.
2. Touch these keys in this order: [State Confirmation] → [Memory / HDD Adj.] → [HDD Format].

Physical Format

1. Touch [Physical Format].
2. Press the Start key to start the formatting sequence.
3. The sequence will be automatically terminated as it is completed.
4. Turn off the main power switch and turn it on again more than 10 seconds after.

Logical Format (only when initial is set up)

1. Touch [Logical Format].
2. Press the Start key to start the formatting sequence.
3. The sequence will be automatically terminated as it is completed.
4. Turn off the main power switch and turn it on again more than 10 seconds after.

✻ Formatting the hard disk will erase all data contained in it.

12.12.15 Memory/HDD State

A. Use

- To display the condition and amount of the memory and hard disk.

B. Procedure

- When the encryption board is mounted, the machine automatically recognizes it and displays [Set].

12.12.16 Color Regist

A. Use

- To check each of C, M, and Y for color shift amount.
- The data is updated after a color shift correction has been made or color shift adjustment has been completed.
- To display the results of skew adjustment.

B. Procedure

- For each of C, M, and Y, the color shift amount (in X and Y directions) at two locations (one at the front and the other in the rear) and the difference in color shift amount between the front and rear (X and Y directions) are displayed.
- Display unit: dots
- Individual color shifts of C, M, and Y are based on K and their amounts are displayed.
- For details of skew adjustment, see the following.
See P.477

12.12.17 IU Lot No.

A. Use

- To display the 10-digit lot number for each of Cyan, Magenta, Yellow IUs.
- To display the 10-digit lot number for developing unit/K.
- The lot number data is stored in EEPROM of each unit.

B. Procedure

- The lot number is displayed even with the front door opened; however, the display is blank, since the machine is unable to read the lot number when the main power switch is turned ON with the front door open. Nonetheless, the lot number will be displayed when the front door is closed.
(The engine obtains the IU lot number information when the front door is closed.)

12.12.18 Adjustment Data List

A. Use

- To display the adjustment and setting value set in the main body.
- Use to check the adjustment and setting value set in the main body.

12.13 Test Mode

- To check the image on the printer side by letting the machine produce various types of test pattern. It also tests the printing operation in running mode, as well as the fax transmission.
- The machine searches through the paper sources in the order of tray 2, tray 3, tray 4, and tray 1 for paper of the maximum size for printing.

12.13.1 Procedure for test pattern output

1. Touch [Test Mode] to display the test mode menu.
2. Touch the desired test pattern key.
3. Set up the desired functions and press the Start key.

12.13.2 Gradation Pattern

A. Use

- To produce a gradation pattern.
- Used for checking gradation reproducibility.

<Test pattern>

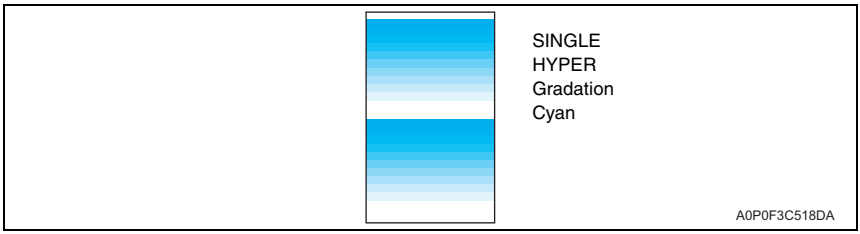

B. Procedure

- # of Print (“1” to 999)
- Select “SINGLE” (single copy) or MULTI (multi copy).
- Select FEET or “HYPER”.
- Select”1-Sided”, 2-Side1 or 2-Side2.
  2-Side1: The same pattern is printed on both front and back sides.
  2-Side2: The front side is blank and the pattern is printed on the back side.
- Select “Gradation”, Resolution or Error diffusion if HYPER has been selected.
- Select “12 Gradations”, 24 Gradations or 256 Gradations.
- Select the color mode.
  “Cyan”, Magenta, Yellow, Black (4PC), CMYK, 8Color, 4Color, Black (1PC)
  Black (4PC): Uses four colors.
  Black (1PC): Uses one color of black.

NOTE

- **When 24 Gradations or 256 Gradations is selected, [8 Color] or [4 Color] is not selectable in color mode.**

12.13.3 Halftone Pattern

A. Use

- To produce a solid halftone pattern.
- Used for checking uneven density and pitch noise.

<Test pattern>

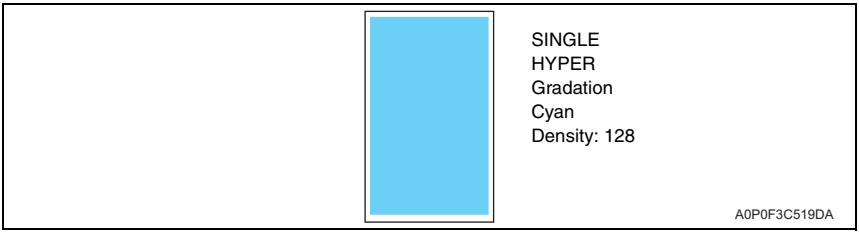

B. Procedure

- # of Print (“1” to 999)
- Select “SINGLE” (single copy) or MULTI (multi copy).
- Select FEET or “HYPER.”
- Select “Gradation”, Resolution or Error diffusion if HYPER has been selected.
- Select”1-Sided”, 2-Side1 or 2-Side2.
  2-Side1: The same pattern is printed on both front and back sides.
  2-Side2: The front side is blank and the pattern is printed on the back side.
- Select the color mode.
  “Cyan”, Magenta, Yellow, Black (4PC), Red, Green, Blue, CMYK, 3 Color, 4 Color, Black (1PC), MIX
- Select a printable area from [Full Bleed] or [Front Half].

NOTE

- **[Front Half] is selectable only for one-side printing.**

- Type the density level (0 to “255”).

12.13.4 Lattice Pattern

A. Use

- To produce a lattice pattern.
- Used for checking fine line reproducibility and uneven density.
- A reverse pattern is also used to check for fine line reproducibility of white letters on a solid background.

<Test pattern>

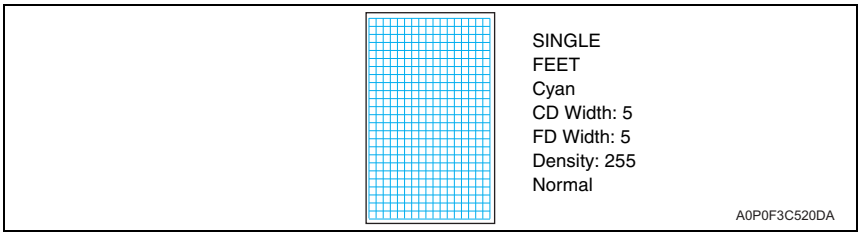

B. Procedure

- # of Print (“1” to 999)
- Select “SINGLE” (single copy) or MULTI (multi copy).
- Select “FEET” or HYPER.
- Select “Gradation”, Resolution or Error diffusion if HYPER has been selected.
- Select”1-Sided”, 2-Side1 or 2-Side2.
  2-Side1: The same pattern is printed on both front and back sides.
  2-Side2: The front side is blank and the pattern is printed on the back side.
- Select Gradation or Resolution. (Only select HYPER)
- Select the color mode.
  “Cyan”, Magenta, Yellow, Black (4PC), Red, Green, Blue, CMYK, 3 Color, 4 Color, Black (1PC)
- Enter CD width and FD width (0 to 191 dots).
- Type the density level (0 to “255”).
- Select “Normal” or Reverse.

12.13.5 Solid Pattern

A. Use

- To produce each of the C, M, Y, and K solid patterns.
- Used for checking reproducibility of image density.

<Test pattern>

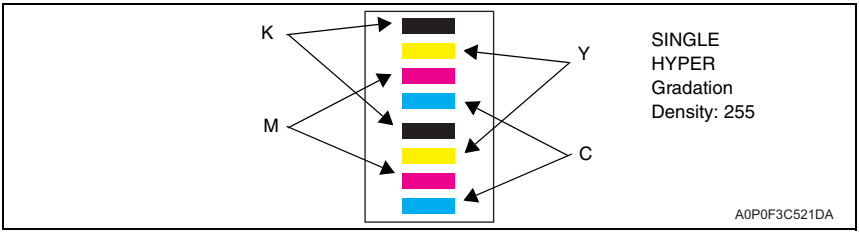

B. Procedure

- # of Print (“1” to 999)
- Select “SINGLE” (single copy) or MULTI (multi copy).
- Select FEET or “HYPER.”
- Select “Gradation”, Resolution or Error diffusion if HYPER has been selected.
- Type the density level (0 to “255”).

12.13.6 Color Sample

A. Use

- To produce a color sample.
- Used for checking reproducibility of each of the different colors.

<Test pattern>

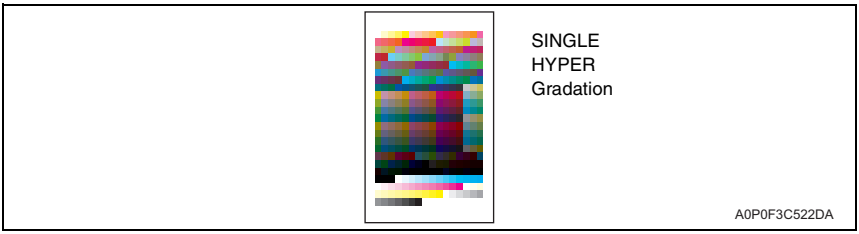

B. Procedure

- # of Print (“1” to 999)
- Select “SINGLE” (single copy) or MULTI (multi copy).
- Select FEET or “HYPER.”
- Select “Gradation”, Resolution or Error diffusion if HYPER has been selected.
- Produce 12-gradation-level patches of C, M, Y, K, R, G, and B, and a patch of each of the 12 reference colors in the hue circle with lightness and saturation corrected.

12.13.7 8 Color Solid Pattern

A. Use

- To produce an 8-color solid pattern.
- Used for checking color reproducibility and uneven density of each color.

<Test pattern>

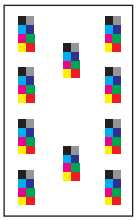

SINGLE
HYPER
Gradation
Density: 255

A0P0F3C523DA

B. Procedure

- # of Print (“1” to 999)
- Select “SINGLE” (single copy) or MULTI (multi copy).
- Select FEET or “HYPER.”
- Select “Gradation”, Resolution or Error diffusion if HYPER has been selected.
- Type the density level (0 to “255”).

12.13.8 CMM pattern

A. Use

- To produce a CMM (Color Management Module) pattern.
- Used to check color difference depending on the places where output is made.

<Test pattern>

Error diffusion
270 degrees

A0P0F3C524DA

B. Procedure

- # of Print is always “1”.
- Select “Error diffusion”, Gradation, or Resolution.
- Select an angle from among “0 degrees”, 90 degrees, 180 degrees, and 270 degrees.

12.13.9 Running Mode

A. Use

- To test the printing operation in running mode.
- Use to check the printing operation in running mode from each paper source.

B. Procedure

1. Call the Service Mode to the screen.
2. Touch these keys in this order: [Test Mode] → [Running Mode].
3. Touch [Select Tray] and select the paper feed tray to be tested.
4. Touch [Paper Kind] and select a paper type.
5. Press the Start key to start the running mode.
6. Pressing the Stop key will stop operation.

12.13.10 Fax Test

- For details, see FK-502 Service Manual.

12.14 ADF

12.14.1 Original Stop Position

<Use>

- To manually adjust the original stop position and the read position in each of the ADF modes.
- When the result is Unable in the automatic adjustment of the original stop position.

<Procedure>

NOTE

- **Before performing this adjustment, the feed zoom adjustment needs to be complete.**
See P.595

(1) Sub Scanning Direction 1-Side / Sub Scanning Direction 2-Side

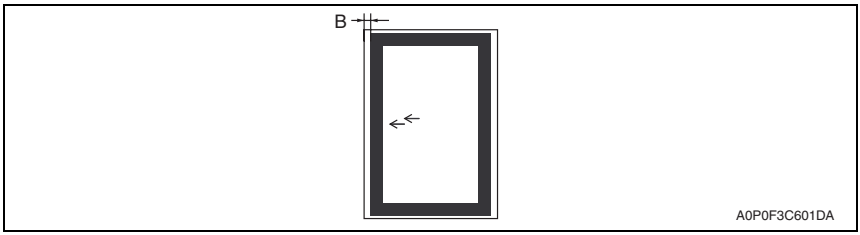

1. Place the chart [1] in the document feed tray (with the side having an arrow facing up).
2. Make a full size copy of the chart.

NOTE

- **In the same way place the chart with the blank side facing up in the document feed tray in the duplex mode and make a copy. Check the difference in the widths of a between the chart and the second sided surface of the copy sample.**

3. Check that the difference in the widths of B between the chart and the copy sample falls within the specified range.

Specification B: 0 ± 2.0 mm
Adjustment range: -4.0 mm to +4.0 mm (1 step: 0.1 mm)

4. Call the Service Mode to the screen.
5. Touch [ADF] → [Original Stop Position].
6. Touch [Sub Scanning Direction 1-Side] or [Sub Scanning Direction 2-Side].
7. Enter the value from the ten-key pad. (Press the [+/-] key to change the +/- code.)
   If the difference in the widths of B is greater than the specifications, enter the + value.
   If the difference in the widths of B is smaller than the specifications, enter the - value.
8. Touch [END].
9. Touch [Exit] on the Service Mode screen.
10. Turn OFF the main power switch, wait for 10 sec., then turn the switch ON.
11. Make a copy of the chart again and check that the difference in the widths of B falls within the specified range.

(2) Main Scanning (Front) / Main Scanning (Back)

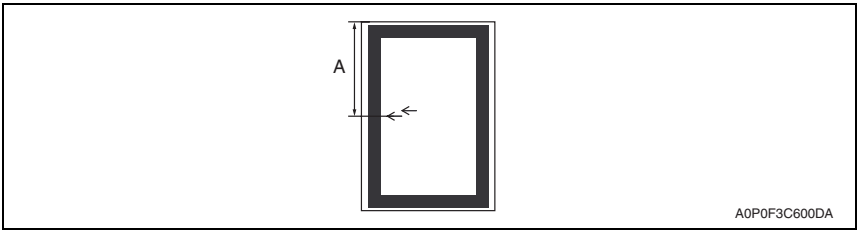

1. Place the chart [1] in the document feed tray (with the side having an arrow facing up).
2. Make a full size copy of the chart.

NOTE

- **In the same way place the chart with the blank side facing up in the document feed tray in the duplex mode and make a copy. Check the difference in the widths of a between the chart and the second sided surface of the copy sample.**

3. Check that the difference in the widths of A between the chart and the copy sample falls within the specified range.

Specification A: 0 ± 2.0 mm
Adjustment range: -4.0 mm to +4.0 mm (1 step: 0.1 mm)

4. Call the Service Mode to the screen.
5. Touch [ADF] → [Original Stop Position].
6. Touch [Main Scanning (Front)] or [Main Scanning (Back)].
7. Enter the value from the ten-key pad. (Press the [+/-] key to change the +/- code.)
   If the difference in the widths of A is greater than the specifications, enter the + value.
   If the difference in the widths of A is smaller than the specifications, enter the - value.
8. Touch [END].
9. Touch [Exit] on the Service Mode screen.
10. Turn OFF the main power switch, wait for 10 sec., then turn the switch ON.
11. Make a copy of the chart again and check that the difference in the widths of A falls within the specified range.

12.14.2 Registration Loop Adj.

<Use>

- To adjust the length of the loop to be formed in paper before the registration rollers.
- When an original misfeed or skew occurs.

<Procedure>

The default setting is 0.
Adjustable range: -5 mm to + 5 mm (in 1-mm increments)

1. Call the Service Mode to the screen.
2. Touch [ADF] → [Registration Loop Adj].
3. Select either [1-Side] or [Second Side] for the adjustment.
4. Press the clear key and change the setting value using the 10-key pad. (Press the [+/-] key to change the +/- code.)
   The amount of loop increases by the amount of positive (+) value and decreases by the amount of negative (-) value.
5. Touch [END].
6. Touch [Exit] on the Service Mode screen.
7. Turn OFF the main power switch, wait for 10 sec., then turn the switch ON.

12.14.3 Auto Stop Position Adjustment

A. Use

- To automatically adjust the read position for the Sub Scanning Direction.
- To check skew feed.
- When ADF has been replaced.

B. Procedure

(1) Sub Scanning Direction 1-SIde

1. Call the Service Mode to the screen.
2. Touch [ADF] → [Auto Stop Position Adjustment].
3. Touch [Sub Scanning Direction 1-SIde].
4. Place the chart in the document feed tray (with the side having an arrow facing up).
5. Press the Start key.
6. Make sure that result is OK. Then, touch [SET].
7. Touch [END].
8. Touch [Exit] on the Service Mode screen.
9. Turn OFF the main power switch, wait for 10 sec., then turn the switch ON.

NOTE

If the result is Unable:

- **Check and correct the skew of the document.**
- **Manually correct the value of [Original Stop Position].**

See P.585

(2) Sub Scanning Direction 2-SIde

1. Call the Service Mode to the screen.
2. Touch [ADF] → [Auto Stop Position Adjustment].
3. Touch [Sub Scanning Direction 2-SIde].
4. Place the chart in the document feed tray (Set the chart with its blank side facing upward).
5. Press the Start key.
6. Make sure that result is OK. Then, touch [SET].
7. Touch [END].
8. Touch [Exit] on the Service Mode screen.
9. Turn OFF the main power switch, wait for 10 sec., then turn the switch ON.

NOTE

If the result is Unable:

- **Check and correct the skew of the document.**
- **Manually correct the value of [Original Stop Position].**

See P.585

(3) Main Scanning (Front)

1. Call the Service Mode to the screen.
2. Touch [ADF] → [Auto Stop Position Adjustment].
3. Touch [Main Scanning (Front)].
4. Place the chart in the document feed tray (with the side having an arrow facing up).
5. Press the Start key.
6. Make sure that result is OK. Then, touch [SET].
7. Touch [END].
8. Touch [Exit] on the Service Mode screen.
9. Turn OFF the main power switch, wait for 10 sec., then turn the switch ON.

NOTE

If the result is Unable:

- **Check and correct the skew of the document.**
- **Manually correct the value of [Original Stop Position].**

See P.585

(4) Main Scanning (Back)

1. Call the Service Mode to the screen.
2. Touch [ADF] → [Auto Stop Position Adjustment].
3. Touch [Main Scanning (Back)].
4. Place the chart in the document feed tray (Set the chart with its blank side facing upward.).
5. Press the Start key.
6. Make sure that result is OK. Then, touch [SET].
7. Touch [END].
8. Touch [Exit] on the Service Mode screen.
9. Turn OFF the main power switch, wait for 10 sec., then turn the switch ON.

NOTE

If the result is Unable:

- **Check and correct the skew of the document.**
- **Manually correct the value of [Original Stop Position].**

See P.585

12.14.4 Paper Passage

A. Use

- To check for paper passage through the ADF in each of the ADF modes.
- Used for checking the document path for any abnormal condition when a document misfeed occurs.

B. Procedure

1. Call the Service Mode to the screen.
2. Touch [ADF] → [Paper Passage].
3. Select a paper passage mode to be tested from [1-Sided No Detect], [1-Sided Mixed Org.], [2-Sided], or [AMS Mixed Org.].
4. Set the original in the feed tray.
5. The Start key changes from orange to blue.
6. Press the Start key. The operation starts.

NOTE

- **After starting the operation by pressing the Start key, if the Start key is pressed during the operation, the operation will be suspended. Then, if the Start key is pressed again during the suspension, the operation will be resumed.**
- **If the Stop key is pressed during the test operation, the test will be forced to end.**
- **If there is no Original set in the feed Tray, the Start key will not work.**
- **All Originals set in the feed Tray are passed through. Upon the completion of all Originals passed through, the Paper Through Test ends.**

12.14.5 Sensor Check

A. Use

- To check sensors on the paper path.
- When a document misfeed occurs.

B. Procedure

1. Call the Service Mode to the screen.
2. Touch [ADF] → [Sensor Check].
3. Operate the sensor to check by using paper or the like, and check the screen display. (Paper detected: 1, No paper detected: 0)

C. Sensor check screen

- This is only typical screen which may be different from what are shown on each individual main unit.

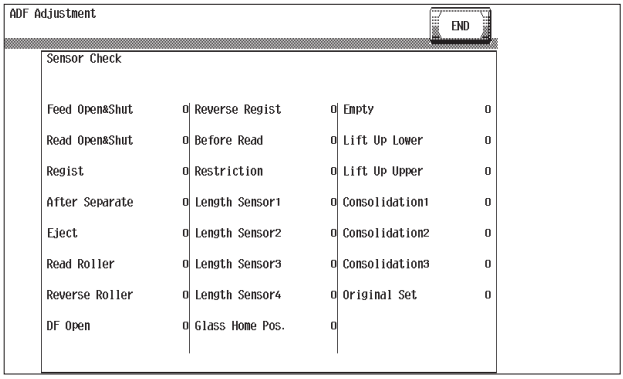

A0P0F3E609DA

D. Sensor check list

Symbol	Panel display	Part/Signal name	Operation characteristics/ panel display	
			1	0
PS1	Feed Open&Shut	Feed open/close sensor	Open	Close
PS2	Read Open&Shut	Read open/close sensor	Open	Close
PS3	Regist	Registration sensor	Paper present (Blocked)	Paper not present (Unblocked)
PS4	After Separate	After separate sensor	Paper present (Unblocked)	Paper not present (Blocked)
PS5	Eject	Exit sensor	Paper present (Unblocked)	Paper not present (Blocked)
PS6	Read Roller	Read roller sensor	Pressure (Blocked)	Retraction (Unblocked)
PS7	Reverse Roller	Reverse roller sensor	Pressure (Blocked)	Retraction (Unblocked)

Symbol	Panel display	Part/Signal name	Operation characteristics/ panel display	
			1	0
RS201	DF Open	Original cover sensor	Open	Close
PS8	Reverse Regist	Reverse registration sensor	Paper present (Blocked)	Paper not present (Unblocked)
PS9	Before Read	Before read sensor	Paper present (Blocked)	Paper not present (Unblocked)
VR1	Restriction	Document width detection variable resistor	Analog value	
PS10	Length Sensor1	Length sensor/1	Paper present	Paper not present
PS11	Length Sensor2	Length sensor/2	Blocked	Unblocked
PS12	Length Sensor3	Length sensor/3	Paper present	Paper not present
—	Length Sensor4	—	Paper present	Paper not present
PS203	Glass Home Pos.	Glass home sensor	At home (Unblocked)	Out of home (Blocked)
PS14	Empty	Empty sensor	Paper present	Paper not present
PS16	Lift Up Lower	Lift up lower sensor	Unblocked	Blocked
PS15	Lift Up Upper	Lift up upper sensor	Blocked	Unblocked
PS19	Consolidation1	Consolidation/1	Paper present	Paper not present
PS18	Consolidation2	Consolidation/2	Paper present	Paper not present
PS17	Consolidation3	Consolidation/3	Paper present	Paper not present
PS20	Original Set	Original set sensor	In position	Out of position

12.14.6 Original Tray Width

A. Use

- To set the values of maximum (A3 position) and minimum (B6 position) widths on the document width detection variable resistor.
- When an original misfeed occurs.
- When an original size detection error occurs.
- When the document width detection variable resistor has been replaced.
- When the EEPROM has been replaced.

B. Procedure

1. Call the Service Mode to the screen.
2. Touch [ADF] → [Original Tray Width].

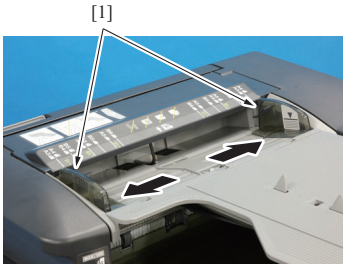

A0HTF2C037DA

3. Widen the width across the edge guides [1] by sliding them to the “A3” position.
4. Touch [Max. Width].
5. Press the Start key.
6. OK is displayed when the adjustment has been completed.

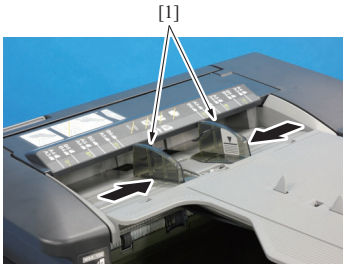

A0HTF2C038DA

7. Narrow the width across the edge guides [1] by sliding them to the “B6” position.
8. Touch [Min. Width].
9. Press the Start key.
10. OK is displayed when the adjustment has been completed.
11. Touch [END].
12. Touch [Exit] on the Service Mode screen.
13. Turn OFF the main power switch, wait for 10 sec., then turn the switch ON.

NOTE

If the result is NG:

- **Possible causes includes failure of the document width detection variable resistor, wrong wiring to the volume and failure of the DFCB.**

12.14.7 Read Pos Adj

A. Use

- To adjust the original read position.
- When the first/second carriage, the scanner wire, the scanner assy, the original glass moving unit, and/or the glass step sheet have been replaced.

B. Procedure

(1) Auto Adjust

1. Call the Service Mode to the screen.
2. Touch [ADF] → [Read Pos Adj].
3. Touch [Auto Adjust].

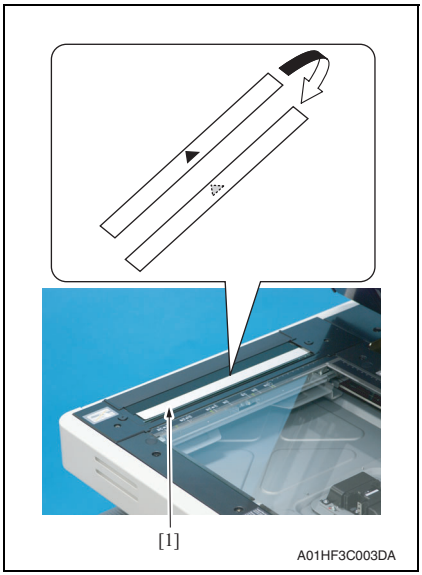

4. Open the ADF.
5. Place the ADF reading chart [1] so that a triangular mark may become the original glass side (downward) and the pointed tip of the triangle points toward the black sheet on the left side.
6. Press the Start key.

NOTE

- **Be sure that the ADF reading chart is in position.**
- **Keep the automatic document feeder open while making the adjustment.**

7. Make sure that the result is OK.
8. Touch [END].
9. Touch [Exit] on the Service Mode screen.
10. Turn OFF the main power switch, wait for 10 sec., then turn the switch ON.

NOTE

If the result is Unable:

- **Check that the chart is in the correct place.**
- **Make the manual adjustment on the [Read Pos Adj] screen.**
  See P.593

(2) Read Pos Adj

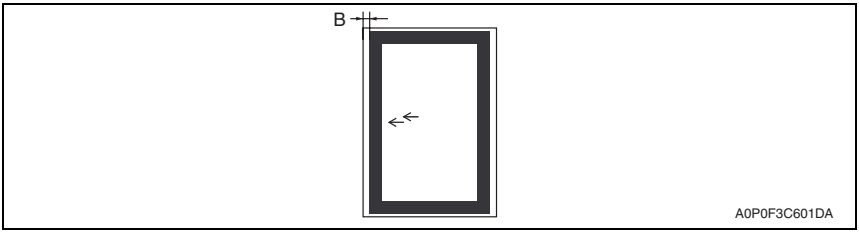

1. Place the chart in the document feed tray (with the side having an arrow facing up).
2. Make a full size copy of the chart.

Specification B: 0 ± 1.0 mm
Adjustment range: -64 mm to +64 mm (1 step: 1 mm)

3. Call the Service Mode to the screen.
4. Touch [ADF] → [Read Pos Adj].
5. Touch [Read Pos Adj].
6. Enter the value using the [-]/[+] keys.
   If the difference in the widths of B is greater than the specifications, enter the - value.
   If the difference in the widths of B is smaller than the specifications, enter the + value.
7. Touch [END].
8. Touch [Exit] on the Service Mode screen.
9. Turn OFF the main power switch, wait for 10 sec., then turn the switch ON.
10. Make a copy of the chart again and check that the difference in the widths of B falls within the specified range.

12.14.8 Feed Zoom

A. Use

- To adjust the feed zoom of ADF in the feeding direction.
- When ADF has been replaced.

B. Procedure

(1) Auto Adjust

1. Call the Service Mode to the screen.
2. Touch [ADF] → [Feed Zoom].
3. Touch [Auto Adjust].
4. Place the chart in the document feed tray (with the side having an arrow facing up).
5. Press the Start key.
6. Make sure that result is OK. Then, touch [SET].
7. Touch [END].
8. Touch [Exit] on the Service Mode screen.
9. Turn OFF the main power switch, wait for 10 sec., then turn the switch ON.

(2) Orig. Feed Zoom Ad

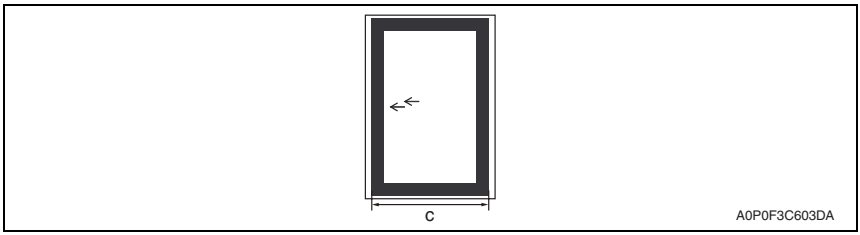

1. Place the chart in the document feed tray (with the side having an arrow facing up).
2. Make a full size copy of the chart.

Specification C: 0 ± 1.0 mm
Adjustment range: -2.00% to +2.00% (1 step: 0.1%)

3. Call the Service Mode to the screen.
4. Touch [ADF] → [Feed Zoom].
5. Touch [Orig. Feed Zoom Ad].
6. Enter the value using the [-]/[+] keys.
   If the difference in the widths of C is greater than the specifications, enter the - value.
   If the difference in the widths of C is smaller than the specifications, enter the + value.
7. Touch [END].
8. Touch [Exit] on the Service Mode screen.
9. Turn OFF the main power switch, wait for 10 sec., then turn the switch ON.
10. Make a copy of the chart again and check that the difference in the widths of C falls within the specified range.

12.14.9 Scanning Light Adjustment

A. Use

- To adjust the scanning light of ADF.
- When the original glass moving unit has been replaced.
- Used for adjusting the difference in the scanning lights between scanning from the original glass and scanning from the ADF original glass.

B. Procedure

Adjustable range: -4 to + 4 (1 step)

1. Call the Service Mode to the screen.
2. Touch [ADF] → [Scanning Light Adjustment].
3. Select a color by pressing [Red], [Green], or [Blue].
4. Press the value using the [+]/[-] key.

NOTE

- **It is recommended that the scanning light adjustment should be made by the same steps for all the three colors of red, green, and blue.**

5. Touch [END].
6. Touch [Exit] on the Service Mode screen.
7. Turn OFF the main power switch, wait for 10 sec., then turn the switch ON.

12.14.10 Mixed original Size adjustment

A. Use

- To adjust paper length detection accuracy used during paper feed in ADF mixed original mode.
- To set the threshold for each size detection based on the length detected when feeding standard sizes (large and small sizes).

B. Procedure

1. Call the Service Mode to the screen.
2. Touch [ADF] → [Mixed original Size adjustment].
3. Place the chart in the document feed tray (with the side having an arrow facing up).
4. Press the Start key.
5. Make sure that result is OK. Then, touch [SET].
6. Touch [END].
7. Touch [Exit] on the Service Mode screen.
8. Turn OFF the main power switch, wait for 10 sec., then turn the switch ON.

12.15 FAX

- For details, see FK-502 Service Manual.

12.16 Finisher

12.16.1 FS-FN adjustment - Center Staple Position

A. Use

- Adjust the stapling position for each paper size when printing with the center staple function.
- Adjust the stapling position for each paper size when printing with the center staple function.

B. Procedure

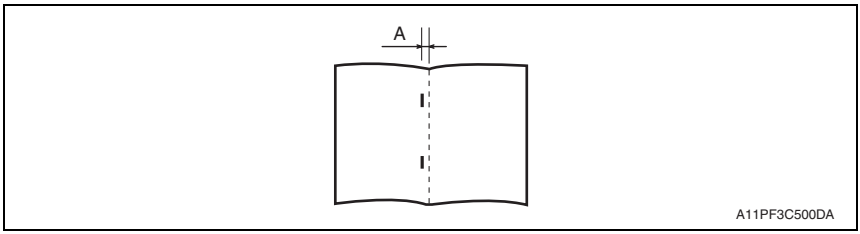

NOTE

- **After [Half-Fold Position] adjustment, make this [Center Staple Position] adjustment.**

1. Place five sheets of originals on the ADF.
2. Make a set of copy in the saddle stitching mode.
3. Check the amount of horizontal deviation (A) between the staple and the half fold positions on the set of copy.

Specification A: 0 ± 1.0 mm
Adjustment range: -10.0 mm to +10.0 mm (1 step: 0.1 mm)

4. If (A) is out of the specified range, make the following adjustment.
5. Call the Service Mode to the screen.
6. Touch [Finisher] → [FS-FN adjustment] → [Center Staple Position].
7. Touch the paper size where staple position is adjusted.
8. Look at the copy and adjust the staple position with the [+]/[-] key.

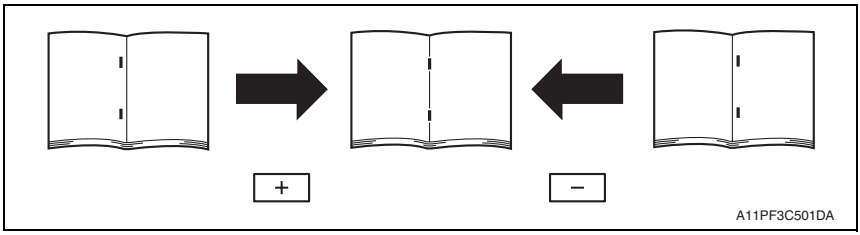

9. Press the Reset key.
10. Touch [Exit] on the Service Mode screen.
11. Turn OFF the main power switch, wait for 10 sec., then turn the switch ON.
12. Make another set of copy sample and check the amount of deviation (A).

12.16.2 FS-FN adjustment - Half-Fold Position

A. Use

- Use this adjustment to adjust the half-fold position in half-fold printing.

B. Procedure

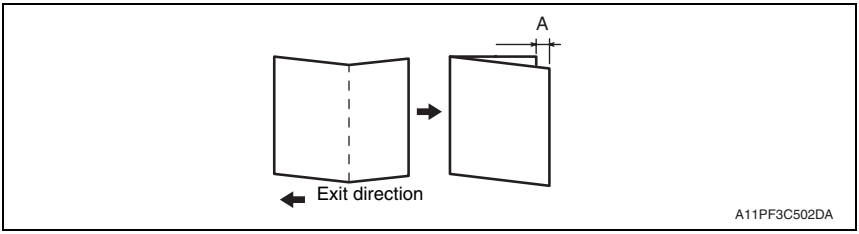

1. Place two sheets of originals on the ADF.
2. Make a copy in the folding mode.
3. Fold the copies along the crease.
4. Measure the amount of deviation (A).

Specification A: 0 ± 1.0 mm
Adjustment range: -10.0 mm to +10.0 mm (1 step: 0.1 mm)

5. If (A) is out of the specified range, make the following adjustment.
6. Call the Service Mode to the screen.
7. Touch [Finisher] → [FS-FN adjustment] → [Half-Fold Position].
8. Touch the paper size where half-fold position is adjusted.
9. Look at the copy and adjust the half-fold position with the [+]/[-] key.

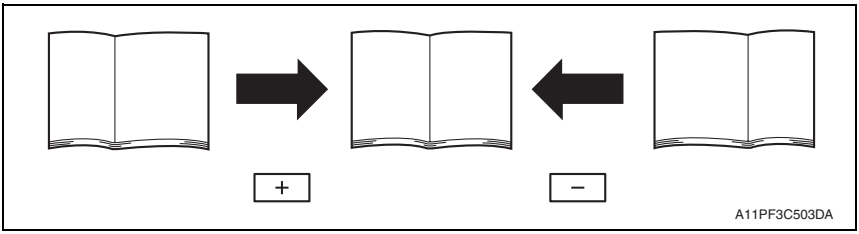

10. Press the Reset key.
11. Touch [Exit] on the Service Mode screen.
12. Turn OFF the main power switch, wait for 10 sec., then turn the switch ON.
13. Make another set of copy sample and check the amount of deviation (A).

12.16.3 FS-FN adjustment - Punch Vertical Position

A. Use

- Adjusts the vertical position of the punch holes.

B. Procedure

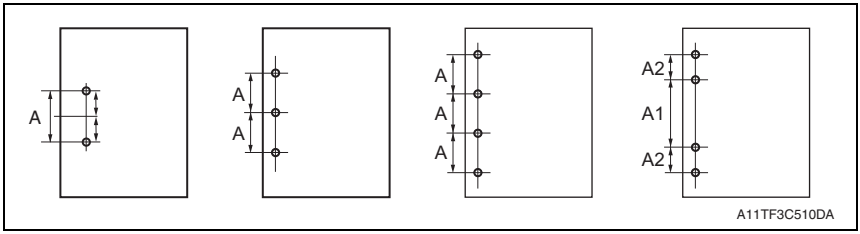

1. Make a copy sample in the punch mode.
2. Make an adjustment so that 1/2 of the length A is within the following standard range.

Specifications:
2-4 hole: A=80 ± 0.5 mm (It is not possible to adjust the A value of the distance between holes.), 1/2 of the vertical length A ± 1.0 mm
2-3 hole (2 hole): A=70 ± 0.5 mm (It is not possible to adjust the A value of the distance between holes.), 1/2 of the vertical length A ± 1.0 mm
2-3 hole (3 hole): A=108 ± 0.5 mm (It is not possible to adjust the A value of the distance between holes.), 1/2 of the vertical length A ± 1.0 mm
SWE4 hole: B1=70 ± 0.5 mm (It is not possible to adjust the A value of the distance between holes.), 1/2 of the vertical length A ± 1.0 mm
SWE4 hole: B2=21 ± 0.5 mm (It is not possible to adjust the A value of the distance between holes.), 1/2 of the vertical length A ± 1.0 mm
Adjustment range: -5.0 mm to +5.0 mm (1 step: 0.1 mm)

3. Call the Service Mode to the screen.
4. Touch [Finisher] → [FS-FN adjustment] → [Punch Vertical Position].
5. Touch the paper size where punch vertical position is adjusted.
6. Look at the copy and adjust the punch vertical position with the [+]/[-] key.
   To move the hole position upward: Enter the value of [+]
   To move the hole position downward: Enter the value of [-]

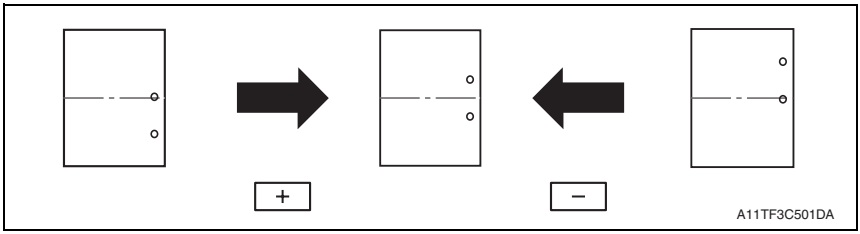

7. Press the Reset key.
8. Touch [Exit] on the Service Mode screen.
9. Turn OFF the main power switch, wait for 10 sec., then turn the switch ON.
10. Make another set of copy sample and check the amount of deviation (A).

12.16.4 FS-FN adjustment - Punch Horizontal Position

A. Use

- To change the horizontal position of the punch holes.

B. Procedure

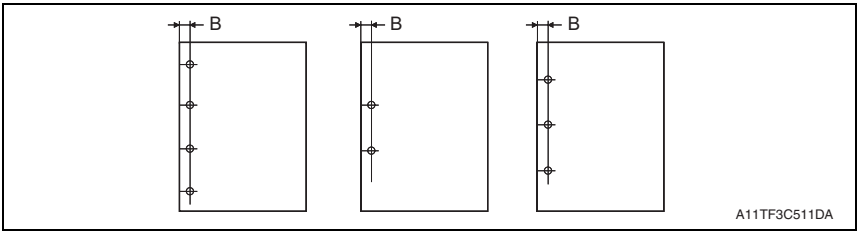

1. Make a copy sample in the punch mode.
2. Make an adjustment so that the width B is within the following range.

<For PK-516>
Specification B: 9.5 mm (2-3 hole), 11.0 mm (2-4 hole), 10.5 mm (SWE4 hole)
Adjustment range: -5.0 mm to +5.0 mm (1 step: 0.1 mm)

<For PK-517>
Specification B: 9.5 mm ± 1.0 mm (2-3 hole), 11.0 mm ± 1.0 mm (2-4 hole),
10.5 mm ± 1.0 mm (SWE4 hole)
Adjustment range: -10.0 mm to +10.0 mm (1 step: 0.1 mm)

3. Call the Service Mode to the screen.
4. Touch [Finisher] → [FS-FN adjustment] → [Punch Horizontal Position].
5. <For PK-516>
Touch the paper size where punch horizontal position is adjusted.
<For PK-517>
Touch the paper type where punch horizontal position is adjusted.
6. Look at the copy and adjust the punch horizontal position with the [+]/[-] key.
To make width B greater : Enter the value of [+]
To make width a smaller : Enter the value of [-]

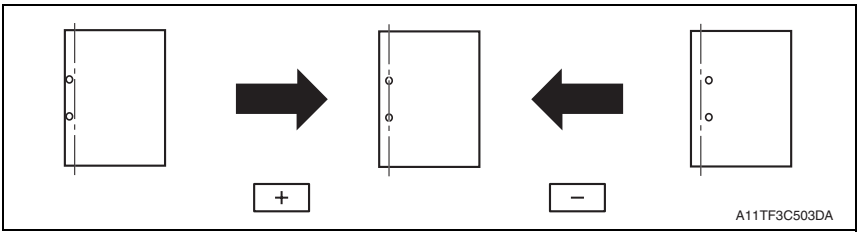

7. Press the Reset key.
8. Touch [Exit] on the Service Mode screen.
9. Turn OFF the main power switch, wait for 10 sec., then turn the switch ON.
10. Make another set of copy sample and check the amount of deviation (A).

12.16.5 FS-FN adjustment - Punch edge detection

A. Use

- Adjusts the sensitivity (light intensity) of the PK punch front sensor of the punch kit.
- This adjustment is made at the time of setup.

B. Procedure

1. Call the Service Mode to the screen.
2. Touch [Finisher] → [FS-FN adjustment] → [Punch edge detection].
3. Touch Start key.
4. Confirm that the result is OK.

NOTE

- **When NG appears, check whether the punch kit is properly installed.**

5. Press the Reset key.
6. Touch [Exit] on the Service Mode screen.
7. Turn OFF the main power switch, wait for 10 sec., then turn the switch ON.

12.16.6 FS-FN adjustment - Punch vertical position (Z-fold)

A. Use

- To adjust the position of the punch hole in the sub-scanning direction when ZU is in use.
- Make the adjustment upon setup of ZU-606.

B. Procedure

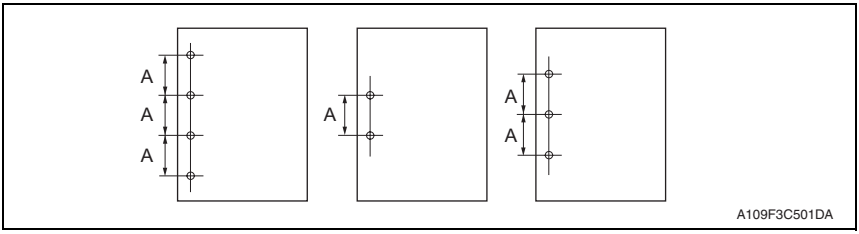

1. Make a copy sample in the punch mode.
2. Make an adjustment so that the width A is within the following range.

Standard value

- It is possible to adjust the A dimension of half of the top and bottom by ± 0.5 mm from the standard value.
- It is not possible to adjust the A value of the distance between holes.

	A	Top and bottom center gap
2-4 hole	80 ± 0.5	Top and bottom A dimension 1/2 ± 1
2-3 hole (2 hole)	70 ± 0.5	
2-3 hole (3 hole)	108 ± 0.5	

Setting range: -5.0 to +5.0 mm (1step = 0.1 mm)

3. Call the Service Mode to the screen.
4. Touch [Finisher] → [FS-FN adjustment] → [Punch vertical position (Z-fold)].
5. Select [ALL] and make the setting using [+] or [-].
   To make width A greater: Enter the Value of [+]
   To make width A smaller: Enter the Value of [-]

NOTE

- **The adjustment setting value used for each paper size is the value set with [ALL] plus the value set for each paper size.**

6. Touch [OK] twice.
7. Touch [Exit] on the Service Mode screen.
8. Turn OFF the main power switch, wait for 10 sec., then turn the switch ON.
9. Make copies in the punch mode again and check that the punch hole positions have been adjusted properly.

12.16.7 FS-FN adjustment - Punch horizontal position (Z-fold)

A. Use

- To adjust the position of the punch hole in the main scanning direction when ZU is in use.
- Make the adjustment upon setup of ZU-606.

B. Procedure

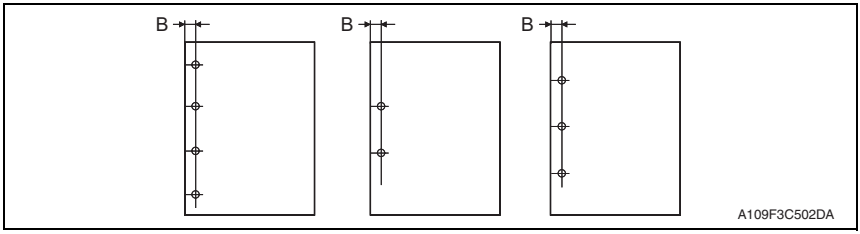

1. Make a copy sample in the punch mode.
2. Make an adjustment so that the width B is within the following range.

Standard value: B = 12.0 mm
Setting range: -5.0 mm to +5.0 mm (Step = 0.1 mm)

3. Call the Service Mode to the screen.
4. Touch [Finisher] → [FS-FN adjustment] → [Punch horizontal position (Z-fold)].
5. Make the setting using [+] or [-].
   To make width B greater: Enter the Value of [+]
   To make width B smaller: Enter the Value of [-]
6. Touch [OK] twice.
7. Touch [Exit] on the Service Mode screen.
8. Turn OFF the main power switch, wait for 10 sec., then turn the switch ON.
9. Make copies in the punch mode again and check that the punch hole positions have been adjusted properly.

12.16.8 FS-FN adjustment - Punch regist adj. (Z-fold)

A. Use

- Adjust the size of the punch resist loop that is applied when ZU operates.
- Make the adjustment upon setup of ZU-606.

B. Procedure

1. Call the Service Mode to the screen.
2. Touch [Finisher] → [FS-FN adjustment] → [Punch regist adj. (Z-fold)].
3. Set the correction value using the [+]/[-] keys.
   Misaligned punched holes: Enter the value of [+]
   Wrinkled paper: Enter the value of [-]

Setting range: -16.0 mm to +16.0 mm (Step = 0.1 mm)

4. Touch [OK] twice.
5. Touch [Exit] on the Service Mode screen.
6. Turn OFF the main power switch, wait for 10 sec., then turn the switch ON.
7. Make copies in the punch mode again and check that the punch hole positions have been adjusted properly.

12.16.9 FS-FN adjustment - Punch Regist Loop Size (Body)

A. Use

- Adjusts the punch loop size used for paper exited from the main body.
- To address problems such as misaligned punch holes, wrinkled paper, and jam at the punch registration section.

B. Procedure

1. Call the Service Mode to the screen.
2. Touch [Finisher] → [FS-FN adjustment] → [Punch Regist Loop Size (Body)].
3. Touch the paper size where punch regist loop size is adjusted.
4. Set the correction value using the [+]/[-] keys.
   Misaligned punched holes: Enter the value of [+]
   Wrinkled paper: Enter the value of [-]

⚠1 Setting range: -5.0 mm to +5.0 mm (Step = 0.1 mm)

⚠1 5. Touch [OK] twice.
6. Touch [Exit] on the Service Mode screen.
7. Turn OFF the main power switch, wait for 10 sec., then turn the switch ON.

⚠1 12.16.10 FS-FN adjustment - Punch Resist Loop Size (PI)

A. Use

- To adjust the loop size used for punch registration in the post inserter upper and lower trays.
- To address problems such as misaligned punch holes, wrinkled paper, and jam at the punch registration section.

B. Procedure

1. Call the Service Mode to the screen.
2. Touch [Finisher] → [FS-FN adjustment] → [Punch Regist Loop Size (PI)].
3. Touch [Upper] or [Lower].
4. Select a type of paper where adjustment is made.
5. Set the correction value using the [+]/[-] keys.
   Misaligned punched holes: Enter the value of [+]
   Wrinkled paper: Enter the value of [-]

Setting range: -5.0 mm to +5.0 mm (Step = 0.1 mm)

6. Touch [OK] twice.
7. Touch [Exit] on the Service Mode screen.
8. Turn OFF the main power switch, wait for 10 sec., then turn the switch ON.

12.16.11 FS-FN adjustment - 1st Z-Fold Position
FS-FN adjustment - 2nd Z-Fold Position

A. Use

- To adjust the positions of the 1st Z-fold and 2nd Z-fold for the Z-fold mode.
- Make the adjustment upon setup of ZU-606.

<Procedure>

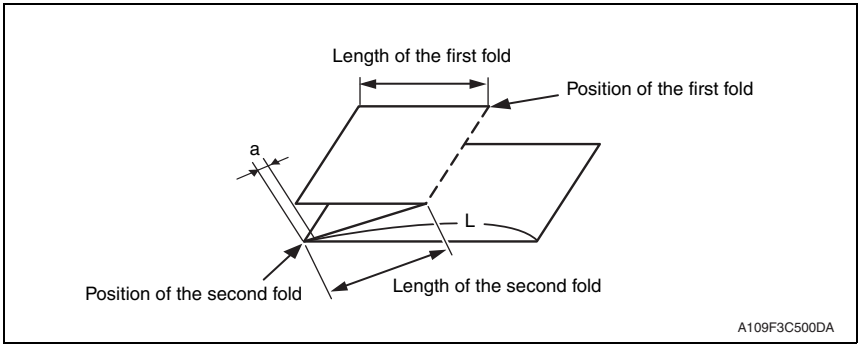

1. Make copies in the Z-fold mode.
2. Make an adjustment so that the width a is within the following range.

	Length of 1st fold	Length a	Length L
11 x 17	108 mm	4.0 ± 2.0 mm	Less than 215 mm
A3	105 mm	4.0 ± 2.0 mm	Less than 209 mm
B4	91 mm	4.0 ± 2.0 mm	Less than 181 mm
8.5 x 14	-	-	Less than 241.7 mm
8K	98 mm	4.0 ± 2.0 mm	Less than 194 mm

Setting range: -12.8 mm to +12.7 mm (Step = 0.1 mm)

NOTE

- **Length of the 1st fold is for standard value.**
- **The adjustable range for B4 size is only between -2.0 mm and +2.0 mm.**
- **8.5 X 14 is available for only an half fold.**

3. Call the Service Mode to the screen.
4. Touch [Finisher] → [FS-FN adjustment] → [1st Z-Fold Position] or [2nd Z-Fold Position].
5. Select [ALL] and make the setting using [+] or [-].
   To increase the length of the 1st fold (2nd fold), enter a negative value with [-] key.
   To decrease the length of the 1st fold (2nd fold), enter a positive value with [+] key.

NOTE

- **The adjustment setting value used for each paper size is the value set with [ALL] plus the value set for each paper size.**

6. Touch [OK] twice.
7. Touch [Exit] on the Service Mode screen.
8. Turn OFF the main power switch, wait for 10 sec., then turn the switch ON.
9. Make copies in the Z-fold mode and check for possible deviation from the specified 1st and 2nd Z-fold positions.

12.16.12 FS-FN adjustment - Tri-Fold Position

A. Use

- Use this adjustment to adjust tri-fold position in tri-fold printing.

B. Procedure

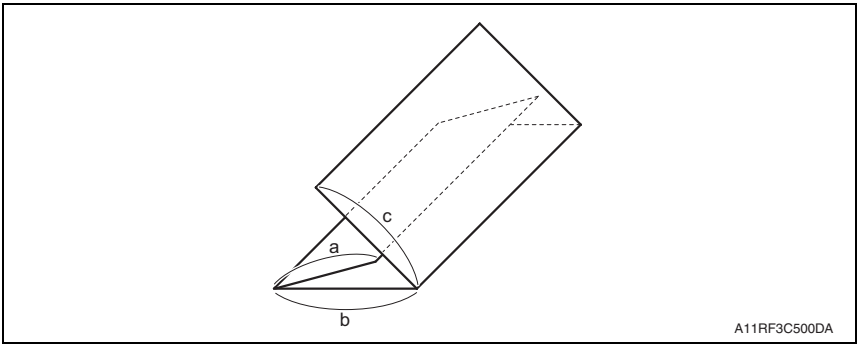

1. Make a copy sample in the tri-folding mode.
2. Check that the tri-fold positions (a, b, c) on the copy are within the specified range.

Folding position	Standard value			Standard
	A4S	8.5 X 11A	16KS	
a	95mm	89.4mm	88mm	±2mm
b	101mm	95mm	91mm	
c	101mm	95mm	91mm	

Adjustment range: -10.0 mm to +10.0 mm (1 step: 0.1 mm)

3. Call the Service Mode to the screen.
4. Touch [Finisher] → [FS-FN adjustment] → [Tri-Fold Position].
5. Touch the paper size where tri-fold position is adjusted.
6. Look at the copy and adjust the tri-fold position with the [+]/[-] key.
   To make width (a) greater : Enter the value of [+]
   To make width (a) smaller : Enter the value of [-]
7. Press the Reset key.
8. Touch [Exit] on the Service Mode screen.
9. Turn OFF the main power switch, wait for 10 sec., then turn the switch ON.
10. Make a copy again and check the 1st fold width “a”.

NOTE

- **If the 2nd fold width b is not within the specified range, perform mechanical adjustment.**
  See P.20 of the SD-508 service manual.

12.16.13 FS-FN adjustment - Center-staple pitch adjustment

A. Use

- Adjust the interval between two staples in saddle stitching.

B. Procedure

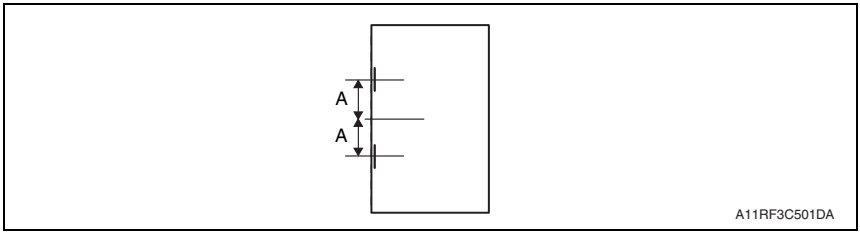

1. Place two sheets of originals on the ADF.
2. Make a set of copy in the two position saddle stitching mode.
3. Measure the interval (A) between the two staples on the copy.

Specification: Paper width of less than 245.3 mm: 42.5 mm ± 3.0 mm
Paper width of 245.3 mm or more: 60.0 mm ± 3.0 mm
Adjustment range: -38.0 mm to +3.0 mm (1 step: 1 mm)

4. Call the Service Mode to the screen.
5. Touch [Finisher] → [FS-FN adjustment] → [Center-staple pitch adjustment].
6. Touch the paper size where saddle stitching pitch is adjusted.
7. Set and adjust a value with the [+]/[-] key.
   To make width (A) greater : Enter the value of [+]
   To make width (A) smaller : Enter the value of [-]
8. Press the Reset key.
9. Touch [Exit] on the Service Mode screen.
10. Turn OFF the main power switch, wait for 10 sec., then turn the switch ON.
11. Make a copy again and check the interval between the staples.

12.16.14 FS-FN adjustment - PI Size Detection

A. Use

- To specify paper sizes that the post inserter detects.
- To set a paper size with which size detection is made when a paper having a similar size is placed on the feeder.

B. Procedure

1. Call the Service Mode to the screen.
2. Touch [Finisher] → [FS-FN adjustment] → [PI Size Detection].
3. Touch [Mode 1].
4. Select a desired paper size with which size detection is made.
5. Make the same setting in [Mode 2] to [Mode 6].
6. Touch [OK] twice.
7. Touch [Exit] on the Service Mode screen.
8. Turn OFF the main power switch, wait for 10 sec., then turn the switch ON.

12.16.15 FS-FN adjustment - Post Inserter Adjustment

A. Use

- To make automatic post inserter size detection adjustments separately in each of the upper and lower trays.
- Make this adjustment at the time of setup or when the post inserter cannot make proper size detection.
- Make this adjustment after performing PI displacement adjustment.

B. Procedure

1. Call the Service Mode to the screen.
2. Touch [Finisher] → [FS-FN adjustment] → [Post Inserter Adjustment].
3. Touch [Upper Tray].
4. Place A4S paper on the upper tray and touch [A4].
5. Touch Start key.
6. Confirm that the result is OK.
7. Touch [Lower Tray].
8. Place A4S paper on the lower tray and touch [A4].
9. Touch Start key.
10. Confirm that the result is OK.
11. Touch [OK] twice.
12. Touch [Exit] on the Service Mode screen.
13. Turn OFF the main power switch, wait for 10 sec., then turn the switch ON.

12.16.16 FS-FN adjustment - finisher check

A. Use

- Use this adjustment to check finisher's operation.

B. Procedure

1. Call the Service Mode to the screen.
2. Touch [Finisher] → [FS-FN adjustment] → [finisher check].
3. Touch [1], [2], [3], [4], [5] or [6] to select a mode.
4. Press the Start key to start finisher operation.
5. Press the Stop key to stop ongoing finisher operation.

C. Finisher check list (FS-526/SD-508/PK-516/PI-505/ZU-606)

Mode	
Finisher check1	M1 (1st Transport M) Forward Rotation 667mm/s Linear Speed
	M1 (1st Transport M) Backward Rotation 667mm/s Linear Speed
	M2 (2nd Transport M) Forward Rotation 667mm/s Linear Speed
	M2 (2nd Transport M) Backward Rotation 667mm/s Linear Speed
	M5/Tray Up/Down M: Move to HP
	M5/Tray Up/Down M: Move to Lower Limit
	M5/Tray Up/Down M: Small No. of Paper Tray Up/Down in Staple Mode
	M17/Stacker Accessory Plate Movement M: HP Search
	M11 & 12/Alignment Plate F/R M: Move to HP
	M11 & 12/Alignment Plate F/R M: Move to Standby Position
	M11 & 12/Alignment Plate F/R M: Alignment Operation
	M11 & 12/Alignment Plate F/R M: Return to Standby Position
	M4/Output Roller Drive M: Forward Rotation 667mm/s Linear Speed
	M34/Center Staple & Fold Output M: Fwd Rotation 50mm/s Linear Sp.
Finisher check2	M22/Center Staple & Fold Leading Edge Stopper M: HP Search
	M6/Paper Output-Driven Roller Position Movement M: HP Search
	M6/Paper Output-Driven Roller Position Movement M: Large Opening
	M13/2-Staple Stapler Movement M: Back at 2 Positions
	M13/2-Staple Stapler Movement M: Front at 2 Positions
	M13/2-Staple Stapler Movement M: Front at 1 Position
	M13/2-Staple Stapler Movement M: Initial
	2-Staple Stapler Unit: Implement Staple Operation
	M23/Center Staple & Fold Stapler Movement M: Initial
	Center Staple & Fold Stapler Unit: Implement Staple Operation
	M23/Center Staple & Fold Stapler Move. M: A3 Paper Binding Pos.
	M26/Cent. Staple&Fold Trail Edge Paddle Up/Down Move. M: HP Search
	M27/Cent. Staple&Fold Center Paddle Up/Down Movement M: HP Search
	M28/Cent. Staple&Fold Lead. Edge Paddle Up/Down Move. M: HP Search
Finisher check3	M10/Transport to Stacker Inlet M: 667mm/s
	M20 & M21/Center Staple & Fold Alignment M F/R: HP Search
	M19/rear stopper move M :HP
	M19/rear stopper move M :standby position 1
	M19/rear stopper move M :standby position 2
	M32/Half-Fold Knife Drive M: Implement 1-Cycle
	M33/Half-Fold Transport M: High-Speed Forward Rotation
	SD2: Bypass Path Switching Gate Solenoid: ON
	SD5: DM Gate Solenoid: ON
	SD1: Center Staple & Fold Path Switching Gate Solenoid: ON
	SD4: Switchback Switching Gate Solenoid: ON
	SD6/Leading Edge Nip Solenoid: ON
	M3 (Bypass Trans./Sub Tray Paper Output M) Fwd Rotation 667mm/s

	Mode	
	Finisher check3	M15: Trail Edge Paddle Up/Down Movement M: HP Search
	Finisher check4	M18: Rewind Paddle Up/Down Movement M: HP Search
		M16: Rewind Paddle Rotation M: Forward Rotation (Stack)
		M31/Cent. Staple&Fold Lead. Edge Paddle Rota. M: Fwd Rota. (Stack)
		M30/Cent. Staple&Fold Center Paddle Rotation M: Fwd Rota. (Stack)
		M29/Cent. Staple&Fold Trail Edge Paddle Rotation M: Fwd Rotation
		M302/Oscillating Drive M: HP Search
		M302/Oscillating Drive M: Edge Sensor Control
		M301/Punch Drive M: HP Search
		M301/Punch Drive M: Execute Punch (2-Hole)
		M301/Punch Drive M: Execute Punch (3- or 4-Hole)
		M201 transportation M F rotation (1000mm/s)
		RU Fan Motor Drive
		Two punch 2/3(4) change motor hole positional movement
		Punch 2/3(4) change motor 3(4) hole position movement
	Finisher check5	Resist motor/transportation motor drive beginning
		Pantibaipassorad turning ON (Punch bypass solenoid turning ON)
		Punch clutch ON
		Punch rubbish transportation motor transportation beginning
		Fan motor drive beginning
		Punch drive motor punch operation execution
		Punch movement motor HP search
1		SD3: subtray and 3rd tray switch gate solenoid: on
1		SD10/3rd tray switch gate solenoid: on
1		SD401/3rd tray switch gate solenoid: on
1		M203(Post Inserter Transport.) 667mm/s Line Velocity
1		MC201 (upper paper feed clutch)
1		MC202 (lower paper feed clutch) ON
1		M201 (Upper rise descent) Down (HP Search)
1	Finisher check6	M201 (Upper rise descent) Up
1		M202 (Lower rise descent) Down (HP Search)
1		M202 (Lower rise descent) Up
1		SD202 (upper row move solenoid) ON
1		SD203 (the lower move solenoid) ON
1		MC203 (resist transportation clutch) ON
1		One Z fold stopper motor HP Search
1		Two Z fold stopper motor HP Search
1		Z-Fold Gate Solenoid ON

D. Finisher check list (FS-527/SD-509)

NOTE

- **"Tray 1" indicates the tray 2 (lower) and "Tray 2" is the tray 1 (upper) shown on the panel.**

Mode	
Finisher check1	Stapler Movement
	Alignment Moving
	Tray up/down operation
	FD Stopper Operation
	Punch Drive Standard Holes
	Punch Drive MC (2 Holed)
	Tray 1 Exit Roller open/Close
	Accommodation Roller Open/Close
	2-Side Path Switch
	Conveyance Drive
	Tray 2 Path Switch
	Upper/Lower Path Switch
	Paddle Operation
	Shift Operation
Finisher check2	Saddle Stapler Operation
	Center fold knife operation
	Center staple Transport Motor Drive
	Edge Stopper Operation
	Center Staple Paddle Operation

12.16.17 FS-FN adjustment - Load Data

A. Use

- Register or call values adjusted for the finisher when it was installed at the customer site.

B. Procedure

1. Call the Service Mode to the screen.
2. Touch [Finisher] → [FS-FN adjustment] → [Load Data].
3. Select a mode from the following.

- Present adjusted value enrollment: Registers values adjusted for the finisher at the installation.
- Enrollment lingua set point call: Calls values adjusted for the finisher at the installation.

4. Press the Start key.
5. Check that [OK] is displayed.
6. Touch [END].
7. Touch [Exit] on the Service Mode screen.
8. Turn OFF the main power switch. Then, wait for 10 sec. or more and turn ON the main power switch.

12.16.18 FS-FN adjustment - Side position adjustment

A. Use

- To fine adjust the horizontal width of the aligning plate.
- Use this feature to fine adjust the aligning plate that aligns ejected paper.

B. Procedure

1. Call the Service Mode to the screen.
2. Touch [Finisher] → [FS-FN adjustment] → [Side position adjustment].
3. Select a mode from the following.

The default setting is “0.0mm”.
Adjustment range: -10.0 mm to +10.0 mm (1 step: 0.1 mm)

4. Set and adjust a value with the [+]/[-] key.
5. Press the Reset key.
6. Touch [Exit] on the Service Mode screen.
7. Turn OFF the main power switch, wait for 10 sec., then turn the switch ON.

12.16.19 FS-FN adjustment - Punch unit edge detection

A. Use

- To adjust sensitivity (intensity) of the paper size detect board (PSDTB) of the punch unit of ZU.
- Make the adjustment upon setup of ZU.

B. Procedure

1. Call the Service Mode to the screen.
2. Touch [Finisher] → [FS-FN adjustment] → [Punch unit edge detection].
3. Press the Start key.
4. Check that [OK] is displayed.

NOTE

- **If the [NG] appears, check the install condition again.**

5. Touch [OK] twice.
6. Touch [Exit] on the Service Mode screen.
7. Turn OFF the main power switch, wait for 10 sec., then turn the switch ON.

12.16.20 Staple Option Setting

A. Use

- Specify the maximum number of sheets that can be stapled together.
- ⚠1 Only when FS-527 is installed, it is possible to independently set the maximum for each paper type.
- To change the maximum that can be stapled together.

B. Procedure

⚠1 <For FS-526>
Default setting: “100 Piece”. Large size staple limit restriction: “Do not do.”
Setting range: [2 to 100]. Large size staple limit restriction: [-20 pieces] or [Do not do.]

⚠1 <For FS-527>
Default setting: Plain Paper “100 Piece”. Thick1 “30 Piece”. Thick1+ “22 Piece”.
Thick2 “22 Piece”. Large size staple limit restriction: “Do not do.”
Setting range: Plain Paper [2 to 50]. Thick1 [2 to 30]. Thick1+ [2 to 15]. Thaick2 [2 to 15].
Large size staple limit restriction: [-20 pieces] or [Do not do.]

1. Call the Service Mode to the screen.
2. Touch [Finisher] → [Staple Option Setting].
3. Enter a desirable maximum number with the 10-key pad.
4. Touch [END].
5. Touch [Exit] on the Service Mode screen.
6. Turn OFF the main power switch. Then, wait for 10 sec. or more and turn ON the main power switch.

NOTE

- **If mixed originals includes one or more large size ones (A3/11 x 17 or more), the maximum that can be stapled together is subject to the setting of large size staple limit restriction.**
- **If large size staple limit restriction is set to [-20 pieces] and the maximum number of sheets to be stapled together less 20 is 2 or less, then the restricted number of sheets as the maximum is 2.**
- **When FS-526 is installed and the staples for 50 sheets are detected, 50 sheets becomes the upper limit even though the setting of the upper limit up to which sheets can be stapled exceeds 50 sheets.**

12.16.21 Punch Option Setting

A. Use

- Specifies punch settings depending on the optional punch kit attached to the finisher.
- An individual punch setting needs to be made according to the type of the punch option.
- ⚠1 This setting is necessary when ZU-606 is installed.

B. Procedure

1. Call the Service Mode to the screen.
2. Touch [Finisher] → [Punch Option Setting].
3. ⚠1 Touch [PK-516] or [PK-517].
4. Touch [2-Holes/3-Holes], [2-Holes/4-Holes], [EU4 holes] or [SWE4 holes].
5. ⚠1 When ZU-606 is installed, touch [ZU-606].
6. Touch [decision].
7. Touch [END].
8. Touch [Exit] on the Service Mode screen.
9. Turn OFF the main power switch. Then, wait for 10 sec. or more and turn ON the main power switch.

12.16.22 Fold power of pages restrict

A. Use

- Imposes restriction on the number of sheets to be folded in each of different folding modes.
- This function is available only when SD-508 or ZU-606 is installed.
- To change the maximum number of sheets to be folded in each of different folding modes.

B. Procedure

[Center Fold]

- Default setting: “3 Piece”.
- Setting range: 1 to 3 Piece

[Center Staple]

- Default setting: “20 Piece”.
- Setting range: 2 to 20 Piece

[three fold]

- Default setting: “1 Piece”.
- Setting range: 1 to 3 Piece.

[z fold/staple using together]

- Default setting: “10 Piece”.
- Setting range: 2 to 10 Piece.

[z fold]

- Default setting: “50 Piece”.
- Setting range: 50 pieces, 40 pieces, 30 pieces, 20 pieces.

1. Call the Service Mode to the screen.
2. Touch [Finisher] → [Fold power of pages restrict].
3. Select a folding mode where the maximum is restricted and enter a desirable maximum number with the 10-key pad.
4. Touch [END].
5. Touch [Exit] on the Service Mode screen.
6. Turn OFF the main power switch. then, wait for 10 sec. or more and turn ON the main power switch.

12.16.23 Job Separator

A. Use

- Use this adjustment to check job separator operation.

B. Procedure

1. Call the Service Mode to the screen.
2. Touch [Finisher] → [Job Separator].
3. Touch [Exit Motor Drive], [Route Change Motor Drive], [Shift Motor Drive] or [Exit Roller Retraction].
4. Touch the Start key to start the operation check.
5. Touch the Stop key to stop the ongoing operation check.

12.17 Internet ISW

- By using this setting, the firmware stored in the server can be downloaded over internet for upgrading.
- For details for upgrading the firmware, refer to “Firmware upgrade” in the Maintenance section.
See P.231

12.17.1 Internet ISW Set

A. Use

- To set whether or not to enable each setting for Internet ISW.
- To use when upgrading the firmware by Internet ISW.
- Each setting such as Server setting will be valid by setting this to “ON”.

NOTE

- **When the following setting is set to “ON”, this setting will automatically be set to “OFF” and cannot be changed.**
[Administrator Settings] → [Security Settings] → [Enhanced Security Mode]

B. Procedure

- The default setting is OFF.

ON “OFF”

12.17.2 HTTP Setting

- It will be displayed only when [Internet ISW Set] is set to “ON”.

12.17.3 HTTP Setting-Data Input Setting

A. Use

- To set whether or not to enable downloading using the HTTP protocol.
- To use when accessing the server using the HTTP protocol.
- Setting on the proxy server will be valid when this setting is “ON”.

B. Procedure

- The default setting is OFF.

ON “OFF”

12.17.4 HTTP Setting-Connect Proxy

A. Use

- To set whether or not to connect via proxy server when accessing the server.
- To use when accessing the server via proxy server.

B. Procedure

- The default setting is OFF.

ON “OFF”

12.17.5 HTTP Setting-Proxy Server

A. Use

- To set the address and the port number for the proxy server.
- To use when accessing the server via proxy server.

B. Procedure

<Server Address>

- Enter an address using IPv4, IPv6, or FQDN format.

<Port Number>

- Enter the value between 1 and 65535 using the 10-key pad.
  (The default setting is 80)

12.17.6 HTTP Setting-Proxy Authentication

A. Use

- To set the login name or password when authentication is necessary for accessing the proxy server.
- To use when authentication is necessary for accessing the proxy server.

B. Procedure

<Authentication>

- The default setting is OFF.

ON “OFF”

<Log-in Name>

- Enter the login name (up to 32 one-byte characters) on the on-screen keyboard.

<Password>

- Enter the password (up to 32 one-byte characters) on the on-screen keyboard.

12.17.7 HTTP Setting-Connection Time-Out

A. Use

- To set the time for the timeout for accessing the server.

B. Procedure

- The default setting is 60 sec.

30 to 300 sec.

12.17.8 FTP Setting

- It will be displayed only when [Internet ISW Set] is set to “ON”.

12.17.9 FTP Setting-Data Input Setting

A. Use

- To set whether or not to enable downloading using FTP protocol.
- To use when accessing the server with FTP protocol.
- Setting this to “ON” will enable the proxy server setting.

B. Procedure

- The default setting is ON.

“ON” OFF

12.17.10 FTP Setting-Connect Proxy

A. Use

- To set whether or not to access the server via proxy server.

B. Procedure

- The default setting is OFF.

ON “OFF”

12.17.11 FTP Setting-Proxy Server

A. Use

- To set the address and the port No. of the proxy server.

B. Procedure

<Server Address>

- Enter an address using IPv4, IPv6, or FQDN format.

<Port Number>

- Enter the value between 1 and 65535 using the 10-key pad.

12.17.12 FTP Setting-Connection Setting

A. Use

- To set the port No. and the time for timeout when accessing the FTP server, and also to set whether or not to enable PASV mode.
- To use when accessing the FTP server.
- To use when connecting by the PASV (passive) mode (FTP server side will inform the connection port before connecting).

B. Procedure

<Port Number>

- Enter the value between 1 and 65535 using the 10-key pad.

<Connection Time Out>

- Enter the value between 1 and 60 (min.) using the 10-key pad.

<PASV Mode>

- The default setting is OFF.

ON “OFF”

12.17.13 Forwarding Access Setting-User ID

A. Use

- To register the user ID for accessing the program server where firmware is to be stored.

B. Procedure

1. Select [User ID].
2. Enter the user ID (up to 64 one-byte characters) on the on-screen keyboard.

12.17.14 Forwarding Access Setting-Password

A. Use

- To register the password for accessing the program server where firmware is to be stored.

B. Procedure

1. Select [Password].
2. Enter the password (up to 64 characters) on the on-screen keyboard.

12.17.15 Forwarding Access Setting-URL

A. Use

- To register the address and directory of the program server where the firmware is to be stored in URL.

B. Procedure

1. Select [URL].
2. Enter the URL (up to 256 one-byte characters) on the on-screen keyboard.

NOTE

- **Enter the URL which format suits the protocol to be used.**
  When connecting to http http:// (Host name or IP address)/ directory name or https:// (Host name or IP address)/directory name.
  When connecting to ftp ftp:// (Host name or IP address) / directory name.

12.17.16 Forwarding Access Setting-FileName

A. Use

- To register the file name of the firmware data to be downloaded.

B. Procedure

1. Select [FileName].
2. Enter the file name (up to 63 one-byte characters) on the on-screen keyboard.

12.17.17 Download

A. Use

- Access the program server according to the Internet ISW setting, and download the firmware.
- To use when updating the firmware via network.

B. Procedure

1. Select [Download].
2. Touch [ISW Start] to start downloading the firmware.
3. The message to show the status will be displayed on the screen while connecting and transferring data.

NOTE

- **When it failed to connect to the program server, or failed to download, the error code and the message will be displayed. Check the cause of the error by the error code, and follow the message for resetting.**
  Refer to "Error cord list" for the error codes.
  See P.242
- When the firmware is normally upgraded, the main body will automatically be restarted to complete the Internet ISW.

13. ENHANCED SECURITY

13.1 List of Enhanced Security

Service Mode		Ref. Page
Enhanced Security	CE Password	P.620
	Administrator Password	P.620
	Administrator Feature Level	P.621
	CE Authentication	P.621
	IU Life Stop Setting	P.622
	NVRAM Data Backup	P.622
	Operation Ban release time	P.622
	Administrator unlocking	P.623
	Engine FW DipSW	P.623

13.2 Starting/Exiting

13.2.1 Starting procedure

1. Call the Service Mode to the screen.
2. Press the following keys in this order.
   Stop → 0→ Clear
3. Enhanced Security menu will appear.

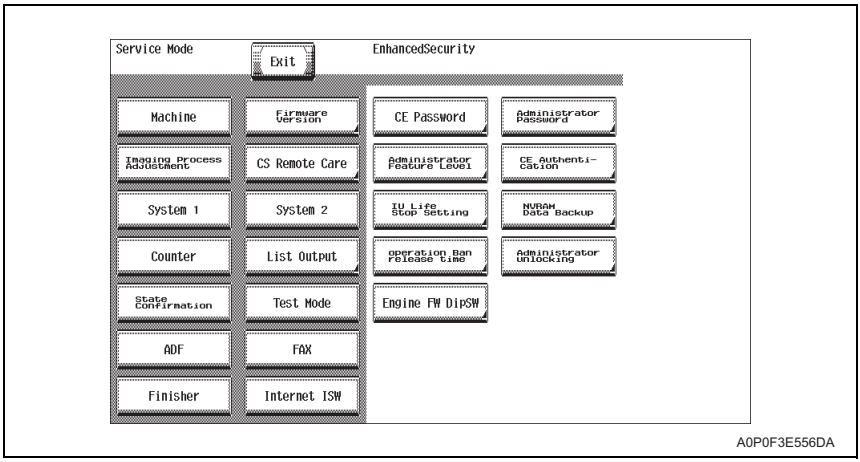

A0P0F3E556DA

13.2.2 Exiting procedure

- Touch the [Exit].

13.3 Enhanced Security

13.3.1 CE Password

A. Use

- To set and change the CE password.

B. Procedure

- Enter the CE password (8 digits) on the on-screen keyboard.
- The initial setting is “92729272.”

  Current Password : Enter the currently using CE password.
  New Password : Enter the new CE password.
  Re-Input Password : Enter the new CE password again.

NOTE

- **When the following setting leads to the Password Rules [ON], the password with the same letters as well as the password which is same as the previous one cannot be changed.**
  [Administrator Settings] → [Security Settings]
- **NEVER forget the CE password. When forgetting the CE password, call responsible person of KMBT.**

13.3.2 Administrator Password

A. Use

- To set and change the administrator password.
- Use this function when the administrator forget the administrator password because a new password can be set without entering the current administrator password with this.

B. Procedure

- Enter the administrator password (8 digits) on the on-screen keyboard.
- The initial setting is “12345678.”

  New Password : Enter the new administrator password.
  Re-Input Password : Enter the new administrator password again.

NOTE

- **When the following setting leads to the Password Rules [ON], the password with the same letters, the password which is same as the previous one and the password of less than eight digits cannot be changed.**
  [Administrator Settings] → [Security Settings]

13.3.3 Administrator Feature Level

A. Use

- To set which modes to be allowed for the administrator to use in Service Mode.
- Use when allowing the administrator to use some modes in Service Mode.
- The modes allowed for the administrator to use in each setting are as follows.

Administrator settings function			Level 1	Level 2
[System Setting] → [Expert Setting]	Printer Adjustment	Erase Leading Edge	—	❍
	Scanner Adjustment	Leading Edge Adjustment	—	❍
		Centering	—	❍
		Horizontal Adjustment	—	❍
		Vertical Adjustment	—	❍
	ADF Adjustment	Centering	—	❍
		Original Stop Position	—	❍
		Centering Auto Adjustment	—	❍
		Auto Adj. of Stop Position	—	❍
	User paper Settings		—	❍
[Standard Size Setting]	Original Glass Original Size Detect		—	❍
	Foolscap Size Setting		—	❍

B. Procedure

- The default setting is Prohibit.

Level1 Level2 “Prohibit”

13.3.4 CE Authentication

- It will not be displayed when the following settings are set to “ON”.
  [Administrator Settings] → [Security Setting] → [Enhanced Security Mode] or [Password Rules].

A. Use

- To determine whether or not to authenticate CE password as entering Service Mode.
- Use when authenticating CE password as entering Service Mode.

NOTE

- **For setting the following setting to “ON”, set the CE Authentication to “ON” and change the initial CE password beforehand.**
  [Administrator Settings] → [Security Setting] → [Enhanced Security Mode] or [Password Rules]

B. Procedure

- The default setting is OFF.

ON “OFF”

13.3.5 IU Life Stop Setting

A. Use

- To select whether or not to stop a print cycle when the IU reaches its service life.

B. Procedure

- The default setting is Stop.

"Stop"	No Stop

13.3.6 NVRAM Data Backup

A. Use

- To backup NVRAM data in the main body to the flash memory.
- To backup current data in order to prevent data in NVRAM from being erased unexpectedly.
- To backup data manually. It usually makes backup every hour automatically.
- Backup data can be restored by following the specified procedure when the trouble (CD3XX) occurred.
  Refer to "Troubleshooting" for details on restoration procedure.
  See P.839

B. Procedure

1. Touch [NVRAM Data Backup].
2. Touch [Start] to start making a backup.
3. Check the message [Backup is completed.], and turn main power switch OFF. Wait for ten seconds or more and turn main power switch back ON.

13.3.7 Operation Ban release time

A. Use

- To set the time that elapses before the machine releases an access lock that is activated after the CE password authentication.
- To set the period of time that elapses before the machine releases the access lock, which aims to prevent the unintentional release of the access lock.
- After the CE password authentication, if the access lock is activated, the lock release timer starts to operate by input the Stop → 0 → 9 → 3 → 1 → 7 in [Meter Count] → [Check Details] → [Coverage Rate] after the main power switch is turned OFF and On. When the timer reaches the time specified in this setting, the access lock is released.

B. Procedure

- The default setting is 1 (minutes).

"1" to 60 (minutes)

NOTE

- **When Enhanced Security Mode is set to ON in [Administrator Settings] → [Security Settings] → [Enhanced Security Mode], the period of time that can be set in this setting is 5 minutes or more.**

13.3.8 Administrator unlocking

A. Use

- To release an access lock that is activated after an administrator password authentication.
- To release the access lock with service authority when an administrator password authentication fails and the access lock is activated.
- When the main power switch is turned OFF and ON or the period of time set in the Release Time Settings elapses, the machine releases the access lock that is activated after the administrator password authentication.
  In addition to these operations, this setting provides another way to release the access lock.

B. Procedure

1. Touch [Administrator unlocking].
2. Touch [unlocking] to release an access lock.
3. When [OK] is displayed, touch [OK].

13.3.9 Engine FW DipSW

- It will be displayed when the following setting shows that switch No.59 is set to [01] at HEX assignment.
  [Service Mode] → [System 2] → [Software Switch Setting])

A. Use

- To make printer engine settings.
- The following table shows DIP switches that can be set in this machine.

Switch No.	Function	Ref. page
1	• Not used	-
2	• Not used	-
3	• New Release Disable mode	P.624
4	• Fusing unit alternative temperature control	P.625
5 : 28	• Not used	-

B. Procedure

1. Touch [Engine FW DipSW].
2. Touch the key that corresponds to the switch No. of the function to be set and check the key is highlighted (ON state) in reverse video.
3. Touch [OK].

C. Details of Each Function

(1) New Release Disable mode

- To enable a unit that is temporarily used for troubleshooting or other purposes to be used again as a new unit in another machine, New Release Disable mode is provided.
- Applicable units are the following that have the new unit detection feature.
  Imaging unit/Y,M,C, Drum unit/K, Developing unit/K

<Procedure>

1. Open the lower front door.
2. Touch [Service Mode] → [Enhanced Security] → [Engine FW DipSW].
3. Touch [3] and check the key is highlighted (ON state) in reverse video.
4. Touch [OK].
5. Close the lower front door.
   By closing the lower front door, the New Release Disable mode takes effect.

Notes when using the New Release Disable mode

<1> Before starting the mode

- **Output the list in [Service Mode] → [List Output] to check the information on the wear-out rate of each unit and keep the Dmax density adjustment value. Replace units that have reached their life or that are near life with new ones, and perform New Release.**

<2> During the New Release Disable mode

- **The New Release Disable mode is subject to the condition that the New Release Disable mode should not be used for a long period, i.e. duration of printing only several tens of sheets. Units used in the New Release Disable mode for a long time cannot be guaranteed as new ones.**
- **If a unit (imaging unit/Y,M,C or developing unit/K) which has reached its life or for which a accumulated rotation time excess warning has been issued are replaced with a new one in the New Release Disable mode, the new unit life is judged as normal and the accumulated rotation time excess warning is reset.**
- **In the New Release Disable mode, the drum unit/K life counter is not reset and it continues to count in a normal manner. If the counter reading becomes close to the value at which an accumulated rotation time excess warning is issued or becomes close to the end of life value, the accumulated rotation time excess warning or the end of life warning can be issued in the New Release Disable mode. (If the drum unit/K counter should reach the end of life value while temporarily using a new drum unit/K in the New Release Disable mode, turn OFF the New Release Disable mode, open and close the lower front door (or turn the main power switch and sub power switch OFF and ON), and perform New Release in a normal manner. In this case, the previous drum unit/K, which has been temporarily removed, cannot be used again.)**
- **After activating the New Release Disable mode in [Engine FW DipSW], do not turn OFF and ON the main power switch and sub power switch or do not let the machine go into the sleep mode until the work in the New Release mode is completed.**
  (In case that the main power switch is turned OFF or the machine goes into the sleep mode, be sure to open the lower front door and turn the main power switch ON or activate the machine from the sleep mode. Then turn ON the New Release Disable mode and close the lower front door.

<3> After finishing work in New Release Disable mode

- **When continuing to use the new unit used in the New Release Disable mode in the same machine, turn OFF the new Release Disable mode and open and close the lower front door (or turn OFF and ON the main power switch and sub power switch) to perform New Release.**
- **To reinstall the previous unit used in the machine, open the lower front door, turn OFF the New Release Disable mode, replace the new unit with the previous unit, and close the lower front door (or turn the main power switch and sub power switch OFF and ON).**
  In this case, perform Initialize + Image Stabilization, Gradation Adjustment, and input of the previous Dmax density adjustment value in service mode. If these adjustments are not performed, gradation reproducibility cannot be guaranteed.
- **After temporarily using a new drum unit/K in the New Release Disable mode, before reinstalling the previous drum unit/K, be sure to check the reading of the drum unit/K life counter in [Service Mode] → [Counter] → [Life] to learn that New Release is not performed on the new drum unit/K, i.e. the counter value have not decreased.**
  There is no way to judge whether New Release is performed on the new drum unit/K or not from the appearance of the unit. Checking the counter reading is necessary to avoid bringing back the drum unit/K on which New Release is performed, assuming that the drum unit/K remains new.

(2) Fusing unit alternative temperature control

- Condensation and dirt on the lens of the heating roller temperature sensor/1 disable accurate temperature detection. To prevent this, this machine provides a control system that detects condensation on the heating roller temperature sensor/1.
- When condensation is detected on the heating roller temperature sensor/1, the heating roller temperature control depends on the temperature detected by the heating roller thermistor/1 instead of the heating roller temperature sensor/1. (Alternative temperature control)
- When a print job is sent during the alternative temperature control, temperature control depends on this setting.
  OFF: Prohibits print during alternative temperature control
  ON: Allows print during alternative temperature control
- During alternative temperature control, printing productivity is reduced by 50 %.

<Procedure>

1. Touch [Service Mode] → [Enhanced Security] → [Engine FW DipSW].
2. Touch [4] and check the key is highlighted (ON state) in reverse video.
3. Touch [OK].

14. BILLING SETTING

14.1 List of billing setting

Service Mode			Ref. Page
Billing Setting	Counter Setting		P.627
	Management Function Choice		P.630
	Coverage Rate Clear		P.638
	License Management	Activation	*1
		Deactivation	
		Repair	
		Initialize	
		Request Code	
		List	
		Function List	
	OpenAPI Authentication Management	Restriction Code	P.639
		Region Code	P.639

*1: For details, see the LK-101 v2/102/103 v2/105 service manual.

14.2 Starting/Exiting

14.2.1 Starting procedure

1. Call the Service Mode to the screen.
2. Press the following keys in this order.
   Stop → 9
3. Billing Setting menu will appear.

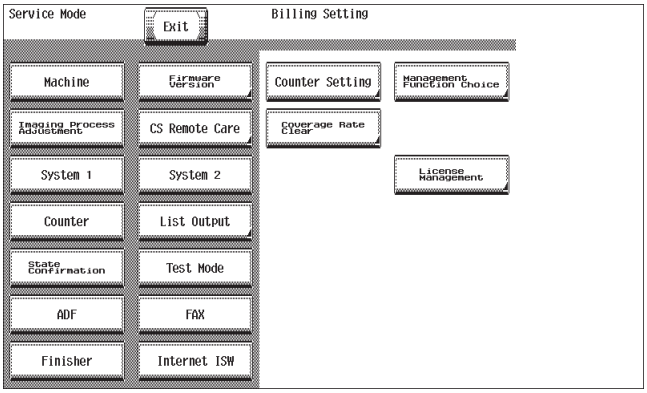

A0P0F3E557DA

14.2.2 Exiting procedure

- Touch the [Exit].

14.3 Billing Setting

14.3.1 Counter Setting

A. Use

- To set the counting method for the total counter, size counter and long length paper counter.
- To set the size regarded as the large size (2 counts.)
- Use to change the counting method for the counters.

B. Procedure

(1) Total Counter

Mode 1 : 1 count per 1 copy cycle (Default: Japan)
Mode 2 : Large size is double counts
(Default: US, Europe, Others 1, Others 2, Others 3, Others 4)

NOTE

- **The content of this setting is reflected in the count method with the key counter.**
- **"Others 1" to "Others 4" are setting items in [Marketing Area] available from Service Mode.**
See P.523

(2) Size Counter

- A3/11 x 17 : When it exceeds 279 mm in the main scan direction and 420 mm in the sub scan direction (exceeds 399 mm at fax scan), it is regarded as the large size.
- A3/B4/11 x 17/8 1/2 x 14 : When it exceeds 215 mm in the main scan direction and 355 mm in the sub scan direction (exceeds 337 mm at fax scan), it is regarded as the large size.
- A3/11 x 17/B4/8 1/2 x 14/Foolscap : When it exceeds 203 mm in the main scan direction and 330 mm in the sub scan direction (exceeds 313 mm at fax scan), it is regarded as the large size (However the size in the main scan direction changes according to the foolscap size setting.)

- Not counted (Default: Japan)
- A3 and 11 x 17 (Default: US)
- A3, B4, 11 x 17, and 8 1/2 x 14 (Default: Europe, Others 1, Others 2, Others 3, Others 4)
- A3, B4, Foolscap, 11 x 17, 11 x 14, and 8 1/2 x 14

✻ Count-up table

Print mode	1-Sided				2-Sided			
Size	Sizes other than those specified		Specified sizes		Sizes other than those specified		Specified sizes	
Mode	Mode		Mode		Mode		Mode	
	1	2	1	2	1	2	1	2
Total	1	1	1	2	2	2	2	4
Size	0	0	1	1	0	0	2	2
2-sided Total	0	0	0	0	1	1	1	1

0: No count; 1: 1 count; 2: 2 counts; 3: 3 counts; 4: 4 counts

(3) Long Length Paper Counter Mode

- When printing on the long paper (457.2 mm or over), the counting value will be the total of the value set by the total counter mode and the value by this setting.
- The default setting is Mode 4.

  Mode 1 : + 0 count
  Mode 2 : + 1 count
  Mode 3 : + 2 counts (457.2 to 915.0 mm will be + 1 count)
  Mode 4 : + 3 counts (457.2 to 686.0 mm will be + 1 count, and 686.1 to 915.0 mm will be + 2 count)

(4) Banner Counter Double Count Mode

- To set whether to use normal count or double count when printing long size paper.
- When “ON” is selected, double count is applied to only long size paper.
- The default setting is OFF.

ON “OFF”

* The count method used when printing long size paper depends on the combination of the above count mode settings: Settings in Long Length Paper Counter Mode and Banner Counter Double Count Mode. The following shows details on count methods that are the combination of each setting.

Total Counter	Long Length Paper Counter Mode	Banner Counter Double Count Mode	paper size	Count
Mode 1	Mode 1	OFF	Normal size	1 count
			Long size	1 count
		ON	Normal size	1 count
			Long size	2 counts
	Mode 2	OFF	Normal size	1 count
			Long size	2 counts
		ON	Normal size	1 count
			Long size	4 counts
	Mode 3	OFF	Normal size	1 count
			Long size 457.3 to 915.0 mm	2 counts
			Long size 915.1 mm or more	3 counts
		ON	Normal size	1 count
			Long size 457.3 to 915.0 mm	4 counts
			Long size 915.1 mm or more	6 counts
	Mode 4	OFF	Normal size	1 count
			Long size 457.3 to 686.0 mm	2 counts
			Long size 686.1 to 915.0 mm	3 counts
			Long size 915.1 mm or more	4 counts
		ON	Normal size	1 count
			Long size 457.3 to 686.0 mm	4 counts
			Long size 686.1 to 915.0 mm	6 counts
			Long size 915.1 mm or more	8 counts

Total Counter	Long Length Paper Counter Mode	Banner Counter Double Count Mode	paper size	Count
Mode 2	Mode 1	OFF	Small size	1 count
			Large size	2 counts
			Long size	2 counts
		ON	Small size	1 count
			Large size	2 counts
			Long size	4 counts
	Mode 2	OFF	Small size	1 count
			Large size	2 counts
			Long size	3 counts
		ON	Small size	1 count
			Large size	2 counts
			Long size	6 counts
	Mode 3	OFF	Small size	1 count
			Large size	2 counts
			Long size 457.3 to 915.0 mm	3 counts
			Long size 915.1 mm or more	4 counts
		ON	Small size	1 count
			Large size	2 counts
			Long size 457.3 to 915.0 mm	6 counts
			Long size 915.1 mm or more	8 counts
	Mode 4	OFF	Small size	1 count
			Large size	2 counts
			Long size 457.3 to 686.0 mm	3 counts
			Long size 686.1 to 915.0 mm	4 counts
			Long size 915.1 mm or more	5 counts
		ON	Small size	1 count
			Large size	2 counts
			Long size 457.3 to 686.0 mm	6 counts
			Long size 686.1 to 915.0 mm	8 counts
			Long size 915.1 mm or more	10 counts

14.3.2 Management Function Choice

- To set whether or not the following items are to be mounted.
  Key Counter, Management Device (Data controller), Authentication Device, or Vendor

NOTE

- **It will not be displayed when the following setting is set to "ON".**
  [Administrator Settings] → [Security Setting] → [Enhanced Security Mode]
- **When the setting shows that [Management Device 1], [Management Device 2] or [Vendor 2] is mounted, the following applications will be invalid.**
  PC FAX transmission / HDD TWAIN/PS Box Operator / PS Scan Direct / PS Job Spooler / Fiery: Scan to Box
  Also, the following setting will be set to "Disable".
  [Administrator Settings] → [Security Setting] → [Management Function Setting] → [Network Function Setting]

14.3.3 Management Function Choice-Key Counter IF Vendor

- Not used

14.3.4 Management Function Choice-Authentication Device 1

A. Use

- To set whether or not the authentication device 1 is installed.
- Set when the authentication device 1 (PageACSES) is mounted.

B. Procedure

NOTE

- **The setting is available only when user authentication and account track are set "OFF" with [Administrator Settings] → [User Authentication/Account Track] → [General Setting].**
- **When the Authentication Device mount setting is set to "mount", make sure that the [IP Address Fax] and [Internet Fax] settings are set to "OFF" with [Service Mode] → [System 2] → [Network Fax Settings].**

14.3.5 Management Function Choice-Authentication Device 2

A. Use

- To set whether or not the authentication device 2 is installed.
- Set when the authentication unit (biometric type or card type) is mounted.
  - Card 1 : Uses IC card authentication system (AU-201)
  - Card 2 : Uses loadable device card authentication system
  - Bio1 : Uses biometrics (finger vein) authentication system (AU-101)
  - Bio2 : Uses biometrics (finger vein) authentication system (AU-102)
- When selecting [Bio1], set a film timeout interval.
- When selecting [Bio2], set a film timeout interval, capture trial time and authentication trial time.
- When selecting [Card 1] or [Card 2], a response timeout interval is displayed. (The interval is unchangeable.)
- When the setting is set to Card 2, the main power switch must be turned OFF and ON to let the new setting take effect.
- Selecting Card 2, a loadable device driver allows to install.

B. Procedure

<Authentication Mode>

Card 1 Card 2 Bio1 Bio2

(1) Installing method of the loadable device driver

- The firmware is updated using the USB memory device.

NOTE

- **NEVER remove or insert the USB memory device with the machine power turned ON.**

1. Prepare a USB memory device on which the driver data of the loadable device to be used was written.
2. Turn OFF the main power switch.
3. Remove the screw [1].
4. Loosen the screw [2], and lift up the cover [3] of the USB port.
5. Insert the USB memory device to the USB port [4] for service.

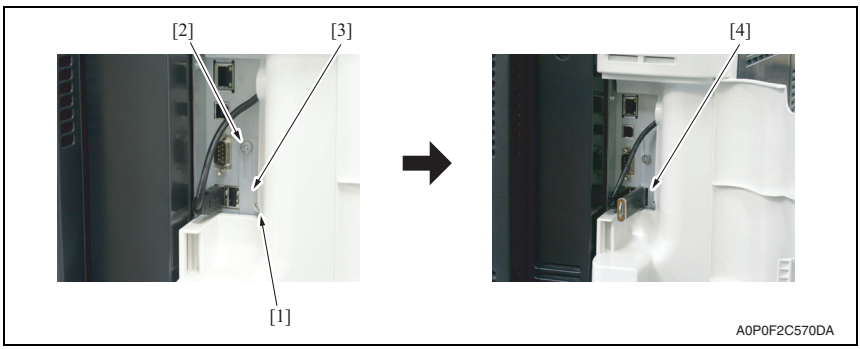

NOTE

- **USB memory must be connected with the main power switch/sub power switch off.**
- **When updating the firmware, use the USB port for the service. It cannot be updated when connected to another USB port.**

6. Turn ON the main power switch and the sub power switch.
7. Select [Yes] on the loadable device driver installation screen.

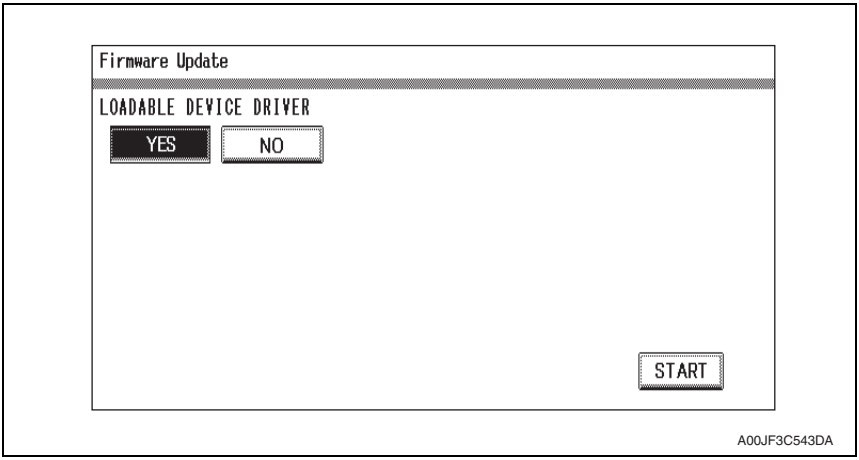

8. Press the [START] to start installing the driver.
(At this time, the Start key starts blinking red.)
9. Check that the control panel shows the message indicating that the data has been installed correctly ([Downloading Completed]). Check also the check sum value ([Check Sum ####]) shown on the control panel. (The Start key lights blue.)
10. Turn OFF the main power switch.
11. Remove the USB memory device from the port.
12. Turn ON the main power switch and sub power switch.

14.3.6 Management Function Choice-Key Counter Only

A. Use

- To set whether or not the key counter is installed.
- Set when the key counter is mounted.
- Select [Color Mode] and [Message] when the key counter is mounted.

✻ Color Mode

- When [Mode 1] is set on [Total Counter Mode] after selecting [Billing Setting] → [Counter setting].
  Mode 1: 1 count per 1 print cycle
  Mode 2: 2 counts per 1 print cycle
  Mode 3: 3 counts per 1 print cycle
  Mode 4: 4 counts per 1 print cycle
  Mode 5: 5 counts per 1 print cycle

- When [Mode 2] is set on [Total Counter Mode] after selecting [Billing Setting] → [Counter setting] and large size is selected on [Large Size Counter Mode]
  Mode 1: 2 counts per 1 print cycle
  Mode 2: 4 counts per 1 print cycle
  Mode 3: 6 counts per 1 print cycle
  Mode 4: 8 counts per 1 print cycle
  Mode 5: 10 counts per 1 print cycle

- When [Mode 2] is set on [Total Counter Mode] after selecting [Billing Setting] → [Counter setting] and sizes other than large size are selected on [Large Size Counter Mode]
  Mode 1: 1 count per 1 print cycle
  Mode 2: 2 counts per 1 print cycle
  Mode 3: 3 counts per 1 print cycle
  Mode 4: 4 counts per 1 print cycle
  Mode 5: 5 counts per 1 print cycle

✻ Message

Select the message type when the administrative unit is mounted.
Type 1: Message for key counter
Type 2: Message for card scanning
Type 3: Message for ID management
Type 4: Message for remote SW

✻ Confirmation copy

- Set whether to allow a confirmation copy when a key counter is installed.
- The default setting is Ban.

License	“Ban”

✻ The next job reservation

- Set whether to allow the reservation of the next job when a key counter is installed.
- The default setting is Ban.

License	“Ban”

NOTE

- **The setting is available only when user authentication and account track are set “OFF” with [Administrator Settings] → [User Authentication/Account Track] → [General Setting].**

14.3.7 Management Function Choice-Management Device 1

A. Use

- To set whether or not the management device 1 is installed.

B. Procedure

NOTE

- **The setting is available only when user authentication is set "OFF" and account track is set "Off" or "Account Name + Password" with [Administrator Settings] → [User Authentication/Account Track] → [General Settings].**

14.3.8 Management Function Choice-Management Device 2

A. Use

- To set whether or not the management device 2 is installed.

B. Procedure

✻ Management Setting

- Select the Management Setting Mode
  Mode 1: Use contact type device (Logout with ID key is not allowed.)
  Mode 2: Use non-contact type device (Logout with ID key is allowed.)

NOTE

- **The setting is not available when either "External Server" of user authentication, "Password Only" of account track, "Do not synchronize" of user authentication and account track or "Allow" of public user access has been set with [Administrator Settings] → [User Authentication/Account Track] → [General Settings].**

14.3.9 Management Function Choice-Vendor 1

- Not used.

14.3.10 Management Function Choice-Vendor 2

A. Use

- To set whether or not the vendor 2 is installed.

NOTE

- **When using the vendor along with the key counter, inserting the key counter will set it to the "Key Counter Mode" and removing it will set it to the "Vendor Mode".**

B. Procedure

- Select color mode and message of key counter.
  (Only for key counter, the type of the color mode and message are same after mounting.)

✻ Confirmation copy

- Set whether to allow a confirmation copy when a key counter is installed.
- The default setting is Ban.

License "Ban"

✻ The next job reservation

- Set whether to allow the reservation of the next job when a key counter is installed.
- The default setting is Ban.

License "Ban"

- Select message of vendor.

✻ Message

Type 1: Message for key counter
Type 2: Message for card scanning
Type 3: Message for ID management

NOTE

- **The setting is available only when user authentication and account track are set "OFF" with [Administrator Settings] → [User Authentication/Account Track] → [General Setting].**

NOTE

- **Performing the setup for each unit to be mounted will internally change the setting values below. It needs resetting when cancelling the setting in order to set back to "not mounted" because the setting value will remain.**

<When the vendor2 or authentication device 1/2 is mounted>

	Setting Item	Vendor 2	Authentication Device 1	Authentication Device 2
Utility	Default Copy Settings	Factory Default		—
	Default Scan/Fax Settings	Factory Default		—
	Copy Operating Screen	[Yes]		—
	Fax Active Screen	Tx/Rx Display [Yes]		—
	Scan/Fax Settings Default Tab	Direct Input	—	—
	Left Panel Display Default	[Job List]		—
Administrator Settings	Each Function Setting	Copy, PC print, Send Data, and Print others will be set to "ON".		
	Network Function Usage Settings	OFF	—	—
	Administrator Security Level	Prohibit		—
	Weekly Timer ON/OFF Setting	OFF	—	—
	Reset Setting	—	Reset Data After Job will be set to "ON".	—
	Application Key Settings	When Key 1 is set to My Panel, reset the setting and assign Key 1 to [FAX/SCAN]. When Key 2 is set to My Panel, reset the setting and assign Key 2 to [Copy].		—
	Restrict Access to Job Settings	Changing Job Priority, Deleting Other User's Jobs, Registering and Changing Addresses, Changing Zoom Ratio will be set to "Restrict".		—
	External Memory Function Settings	—	Save Document and Print Document will be set to "OFF".	
	Skip Job Operation Settings	All settings be set to "Yes".	—	—
	ID & Print Settings	—	—	ID & Print will be set to "ON".
	Forward TX Setting	OFF		—
	Memory RX Setting	Password for Memory RX Setting is set to the default value of the administrator password	—	—
	PC-Fax RX Setting	Restrict	—	—
	TSI User Box Setting	No	—	—
	OpenAPI Setting	Access Setting will be set to "Restrict" and Authentication will be changed to "OFF" setting.	Access Setting will be set to "Restrict".	—
	IPP Setting	—	IPP Setting will be set to "OFF", and Accept IPP job will be set to "OFF".	—
	AppleTalk Setting	—	OFF	—
	SMB Setting	—	Scan Setting, Print Setting will be set to "OFF".	—
	E-mail TX (SMTP)	—	E-mail TX Setting, Scan to E-mail, E-mail Notification, Meter Count Notification will be set to "Restrict".	—

Setting Item		Vendor 2	Authentication Device 1	Authentication Device 2
Administrator Settings	E-mail RX (POP)	—	E-mail RX Setting will be set to “OFF”.	—
	LDAP Settings	—	Enabling LDAP will be set to “OFF”.	—
	Prefix/Suffix Setting	—	Prefix/Suffix Setting will be set to “OFF”.	—
	WebDAV Client Settings	—	WebDAV Client Settings will be set to “OFF”.	—
	Web Service Settings Printer setting/Scanner setting	Printer Setting and Scanner setting will be set to “OFF”.		—
	Status Notification Setting Notification Item Setting	—	All setting items will be set to “OFF”.	—
	Image Log Transfer Settings	[No]	—	—
Service Mode	Software Switch Setting	SW No. 63 will be changed to 01 (HEX).	—	—
	Management function choice	Confirmation copy will be set to “Ban”.	—	—
	FAX	[System] → [Display Setting] → [Re-Transmission] will be set to “OFF”.	—	—

<When the key counter IF vendor or management device 1/2 is mounted>

Setting Item		Key counter IF Vendor	Management Device 1	Management Device 2
Utility	Default Copy Settings	Factory Default	—	—
	Default Scan/Fax Settings	Factory Default	—	—
	Copy Operating Screen	[Yes]	—	—
	Fax Active Screen	Tx/Rx Display [Yes]	—	—
	Scan/Fax Settings Default Tab	Direct Input	—	—
	Left Panel Display Default	[Job List]	—	—
Administrator Settings	Each Function Setting	Copy, PC print will be set to “ON”. Send Data, Print others will be set to “OFF”.	Copy will be set to “ON”. PC print, Send Data, and Print others will be set to “OFF”.	Copy, PC print, Send Data, and Print others will be set to “ON”.
	Network Function Usage Settings	OFF		
	Administrator Security Level	Prohibit	—	—
	Weekly Timer ON/OFF Setting	OFF	—	—
	Application Key Settings	—	—	When Key 1 is set to My Panel, reset the setting and assign Key 1 to [FAX/SCAN]. When Key 2 is set to My Panel, reset the setting and assign Key 2 to [Copy].
	Restrict Access to Job Settings	Changing Job Priority, Deleting Other User's Jobs, Registering and Changing Addresses, Changing Zoom Ratio will be set to “Restrict”.	—	—
	External Memory Function Settings	—	—	—

	Setting Item	Key counter IF Vendor	Management Device 1	Management Device 2
Administrator Settings	Forward TX Setting	OFF	—	—
	Memory RX Setting	Password for Memory RX Setting is set to the default value of the administrator password	—	—
	PC-Fax RX Setting	Restrict	—	—
	TSI User Box Setting	No	—	—
	OpenAPI Setting	Access Setting will be set to “Restrict” and Authentication will be changed to “OFF” setting.	—	—
	Apply Stamps/Stamp	No	—	—
	Apply Stamps/Copy Protect	No	—	—
	Apply Stamps/Stamp Repeat	No	—	—
	Apply Stamps/Copy Protect	No	—	—
	Apply Stamps/Page Number	No	—	—
	Apply Stamps/Date/Time	No	—	—
	Web Service Settings Printer setting/Scanner setting	Printer Setting and Scanner setting will be set to “OFF”.		
	Image Log Transfer Settings	[No]	—	—
Service Mode	Software Switch Setting	SW No. 63 will be changed to 01 (HEX).	—	—
	Management function choice	Confirmation copy will be set to “Ban”.	—	—
	FAX	[System] → [Display Setting] → [Re-Transmission] will be set to “OFF”.	—	—

14.3.11 Coverage Rate Clear

A. Use

- To clear the coverage rate.

B. Procedure

- The default setting is Unset.

Set “Unset”

- Touching [END] key will clear the coverage rate.

14.3.12 OpenAPI Authentication Management-Restriction Code

- It will be displayed in bizhub C652/C552 machines where the function version is version 2 or later and in all bizhub C452 machines.

A. Use

- These are communication settings for the application which is developed by the third vendor.
  Do not set or change these settings without vendor's instructions.

14.3.13 OpenAPI Authentication Management-Region Code

- It will be displayed in bizhub C652/C552 machines where the function version is version 2 or later and in all bizhub C452 machines.

A. Use

- These are communication settings for the application which is developed by the third vendor.
  Do not set or change these settings without vendor's instructions.

15. CONTENTS TO BE CLEARED BY RESET FUNCTION

Function for clearing / Contents to be cleared		Front door open/close	Main power switch OFF/ON	Trouble reset	Initialize						
							Clear All Data				
					System Error Clear	Clear All Data	Job Memory Setting Data	Address Registration Data	Fax Setting Data	All History Data	Network Setting Data
Jam display		❍	—	—	❍	❍	—	—	—	—	—
Malfunction display	Rank A	—	—	❍	❍	❍	—	—	—	—	—
	Rank B	❍	—	❍	❍	❍	—	—	—	—	—
	Rank C	—	❍	❍	❍	❍	—	—	—	—	—
Erratic operation / display		—	❍	—	❍	❍	—	—	—	—	—
Utility Mode (Except items on engine adjustment)		—	—	—	—	❍	—	—	—	—	—
Job memory setting data		—	—	—	—	❍	❍	—	—	—	—
Address registration data		—	—	—	—	❍	—	❍	—	—	—
Fax setting data (Excluding destination-related data)		—	—	—	—	❍	—	—	❍	—	—
History data (Job history, Journal history, Receive reject history, Destination history, Job secure counter)		—	—	—	—	❍	—	—	—	❍	—
Network setting data (Excluding destination-related data)		—	—	—	—	❍	—	—	—	—	❍
Service Mode (System 1/2)		—	—	—	—	❒ *1	—	—	—	—	—
Billing Setting	Management Function Choice	—	—	—	—	❍	—	—	—	—	—
Adjustment of the touch panel position		—	—	—	—	❍	—	—	—	—	—

❍ : Will be cleared (initialized)
— : Will not be cleared

❒ *1: Items to be cleared	
System 1	Marketing Area (Fax Target only)
System 2	HDD
	Image Controller Setting

16. MECHANICAL ADJUSTMENT

16.1 Mechanical adjustment of the scanner section

16.1.1 Adjustment of the scanner motor belt

This adjustment must be made in the following case:
- **The scanner motor assy has been removed.**
- **The scanner drive cables have been rewound.**

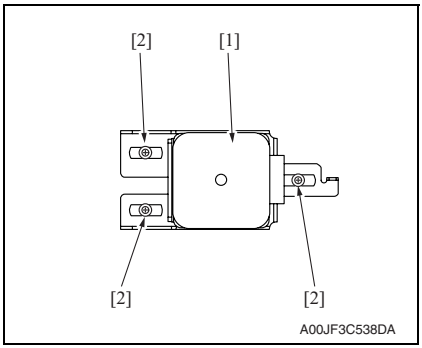

1. Temporarily secure the scanner motor assy [1] with three screws [2].

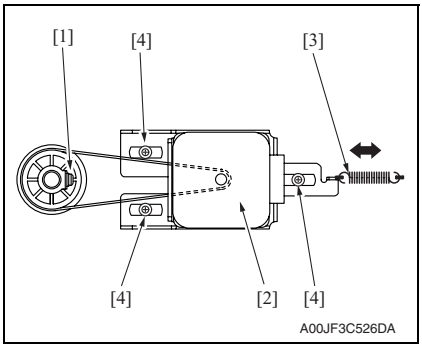

2. With the scanner drive gear set screw [1] located on the right-hand side as shown on the left, slide the scanner motor assy [2] to the left and check that it is returned to the original position by the tension of the spring [3].
Perform this step three times.
3. Tighten the three screws [4] to fix the scanner motor assy into position.

16.1.2 Focus positioning of the scanner and mirrors unit

This adjustment must be made in the following case:

- **The scanner drive cables have been rewound**

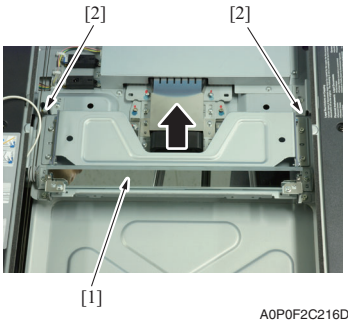

A0P0F2C216DA

1. Move the mirror unit [1] to the center and push it against the notches [2] on the rail.

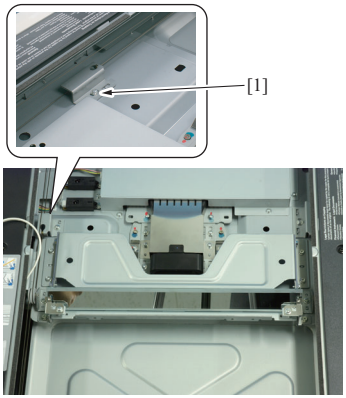

A0P0F3C563DA

2. When the mirror unit do not push its both sides against the notches, loosen two mirror unit adjustment screws [1] and adjust the mirror unit position until it pushes its both sides against the notches.
   Tighten the adjustment screw.
3. Then conduct scanner positioning adjustment.

16.1.3 Scanner position adjustment

This adjustment must be made in the following case:

- **The scanner drive cables have been rewound.**
- **Focus positioning of the scanner and mirrors unit must be completed.**

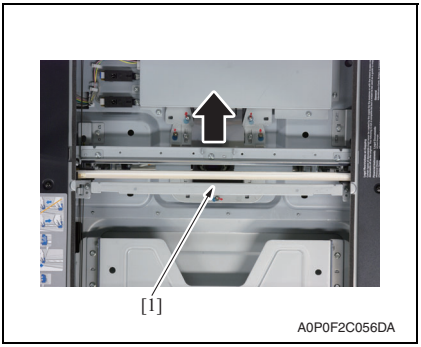

1. Move the exposure unit [1] and the mirror unit to the end of the right.

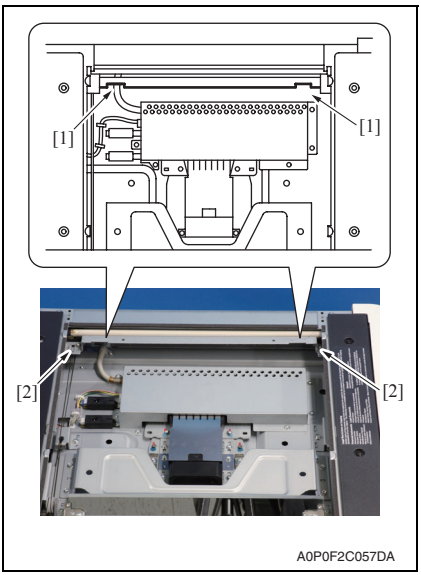

2. Slide the mirror unit until it hits the end of the IR right frame.
3. Provide the length of 21.0 mm between the end of the left indentation [1] on the exposure unit upper surface and the end of the IR right frame upper surface. When the length is ensured, tighten the two screws [2].

4. Mount the original glass moving unit, and adjust the height of the original glass moving unit.
See P.644
5. Whenever the scanner drive cables have been removed, be sure to carry out the [Feed Direction Adjustment] procedure.
See P.474
6. Perform the following setting.
[Service Mode] → [ADF] → [Read Pos Adj]
See P.593

16.1.4 Adjusting the height of the original glass moving unit

This adjustment must be made in the following case:

- **When replacing the original glass moving unit.**

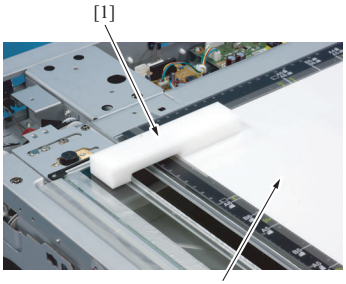

A00JF3C010DA

1. Set the height adjustment jig for the original glass moving unit [1]. Insert the paper [2] between the original glass and the height adjusting jig for the original glass moving unit.

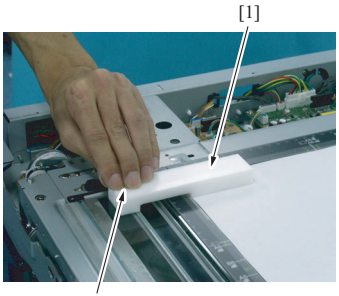

A00JF3C011DA

2. Press the height adjusting jig for the original glass moving unit [1] on the original glass moving unit side [2].

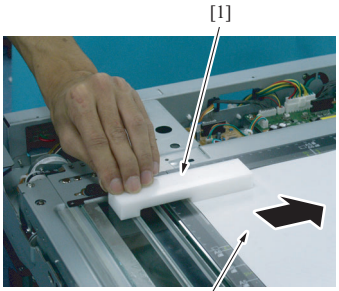

A00JF3C012DA

3. Pull the paper [2] while pressing the height adjusting jig for the original glass moving unit [1] and make sure that the paper will not come out.

NOTE

- **Pull the paper [2] while pressing the height adjusting jig for the original glass moving unit [1] and make sure that the paper will not come out.**

4. When the paper comes off, the adjustment of the height is necessary by the following procedure.

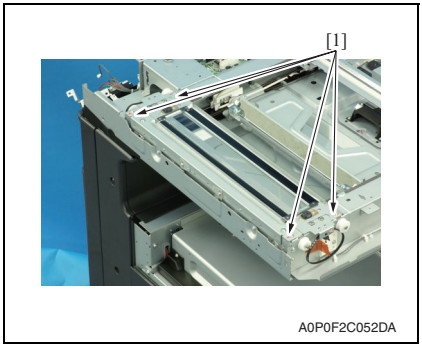

5. Remove four screws [1] from the original glass moving unit.

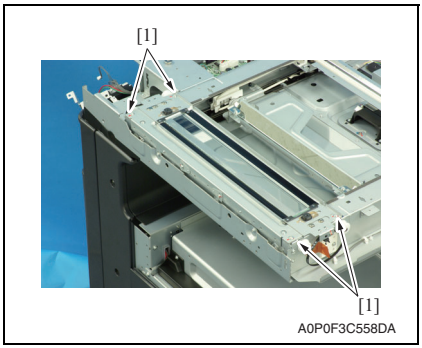

6. Install four spacers [1] and make a height adjustment.

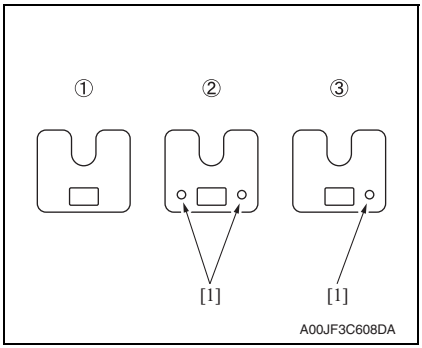

NOTE

- **Prepare and use the spacers described below as necessary.**
  ①A00J 2903 ##: 0.5 mm thickness
  ②A00J 2908 ##: 0.2 mm thickness
  ③A00J 2909 ##: 0.1 mm thickness
- **Each spacer can be identified by the number of holes [1] which are 1.5 mm in diameter.**

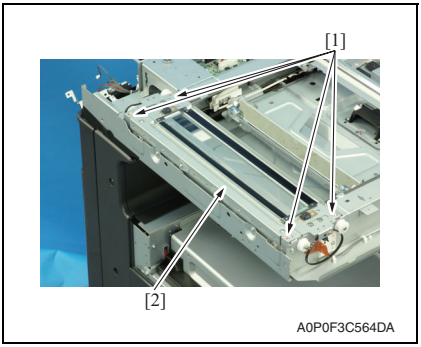

7. Temporarily secure the original glass moving unit [2] with four screws [1].
8. Check the height repeating step 1 to 3.
9. Secure the original glass moving unit with four screws [1].

16.1.5 Adjusting the height of the guide support for the original glass moving unit

This adjustment must be made in the following case:

- **Only when original jam, bend, or tilt occurred during original feeding by ADF.**

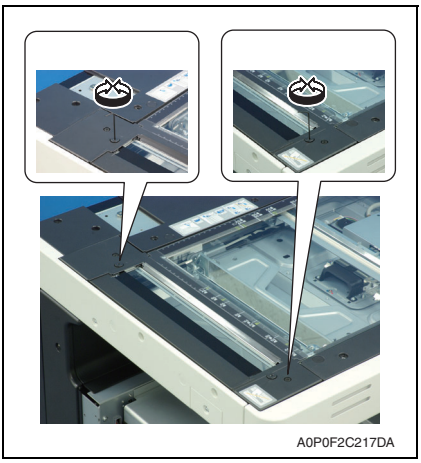

1. Adjust the guide support for the original glass moving unit by rotating the small screws (one on the near side and one on the far side) with the hexagon wrench (1.5 mm) to adjust the height.

Turning clockwise: Up
Turning counterclockwise: Down

NOTE

- **Feed a paper with ADF, and adjust so that no original jam, bending, or tilt will occur.**

16.2 Mechanical adjustment of the paper feed section

16.2.1 Tray3/4 paper size change

This adjustment must be made in the following case:
- **Upon user requests, the paper size used for the tray3/4 needs to be changed.**

1. Pull out the tray where this adjustment is made.

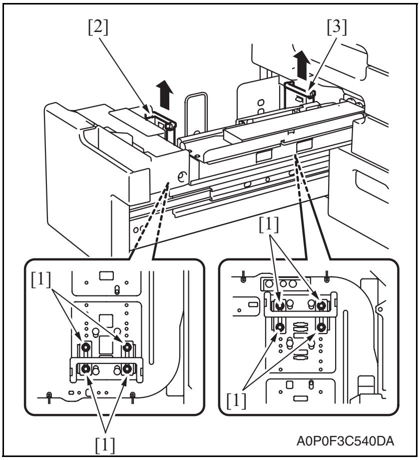

A0P0F3C540DA

2. Remove four screws [1] and remove the paper guide plates (front [2]/rear [3]).

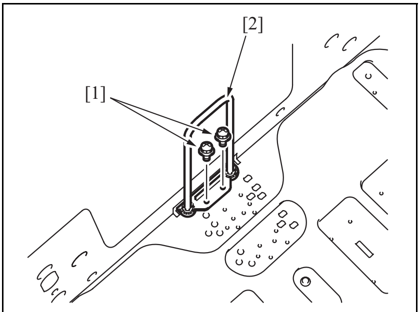

A0P0F3C541DA

3. Remove two screws [1] and remove the end guide plates [2].

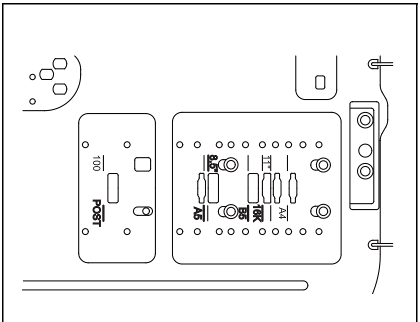

A0P0F3C542DA

4. Align the paper guide plate (rear) with the marking on the bottom and secure it with four screws.

To set B5/8.5/16K sizes:
- **Insert the paper guide plate (rear) into the hole. Align it with the back marking and secure it.**

To set A5/Post card size:
- **Insert the paper guide plate (rear) into the hole. Align it with the front marking and secure it.**

5. Insert paper of the size to be placed in the tray, and set the paper guide plate (front) against the edge of the paper.

Gap between paper and the paper guide plate (front):0 < 1mm

6. Secure the front side of the paper guide plate (front) with two screws, remove the paper and secure the back side with two screws.
7. Align the end guide plate with the marking on the bottom and secure it.
8. Select the tray where paper size needs to be changed and change paper size in the following screen.
   [Service Mode] → [System 2] → [LCC Size Setting]
   See P.535
9. Make a test print.

16.2.2 Skew adjustment of the tray 1/2

This adjustment must be made in the following case:

- **To reduce paper skew that cannot be corrected by the registration loop adjustment when the tray 1 or 2 is within the specifications.**

1. Pull out the tray where this adjustment is made.

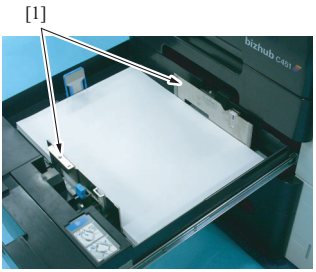

A00KF3C516DA

2. Load the tray with the paper.
3. Move the set of the paper guides [1] until no gap is produced between the both ends of paper and the paper guides.

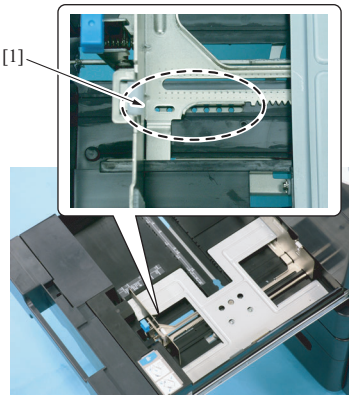

A00KF3C513DA

4. Remove the paper from the tray.
5. Secure the set of paper guides [1] on the tray using a screw (M3 x 8 mm: V121 0308 04).

16.2.3 Centering adjustment of the tray 1/2

This adjustment must be made in the following case:

- **When an image printed on a copy is displaced from the correct position with the use of the tray1/2.**

1. Make a test print and check the amount of misalignment.
2. Pull out the tray where this adjustment is made.

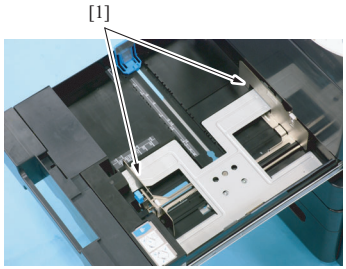

A00JF3C002DA

3. Stretch the paper guide [1] to the maximum size position.

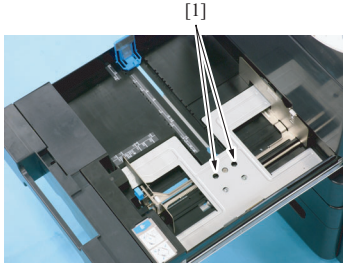

A00JF3C003DA

4. Loosen two screws [1].

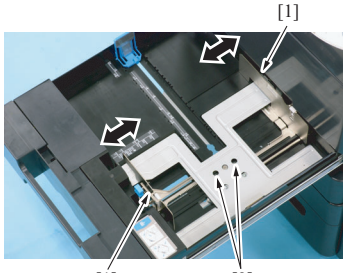

A00JF3C004DA

5. Move the paper guide [1] complete according to the amount of the mis-centering you checked in step 1 and adjust the center position of it.
6. Tighten two screws [2].
7. Make another test print and check the amount of misalignment.

16.2.4 Centering adjustment of the tray 3/4

This adjustment must be made in the following case:

- **When adjustment in the following screen does not resolve a problem.**
  [Service Mode] → [Machine] → [Centering]

1. Make a test print and check the amount of misalignment.
2. Pull out the tray where this adjustment is made.

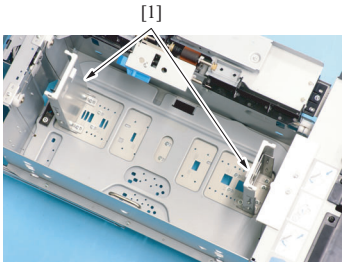

A00JF3C005DA

3. Stretch the paper guide [1] to the maximum size position.

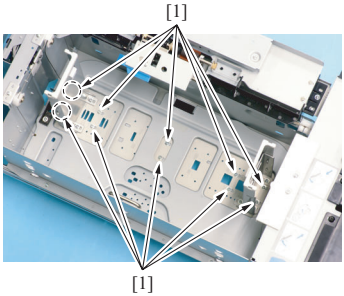

A00JF3C006DA

4. Loosen ten screws [1].

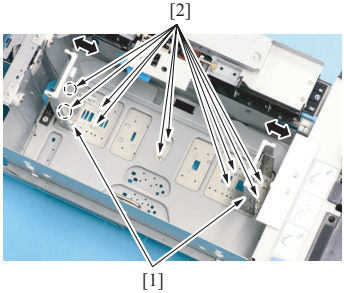

A00JF3C007DA

5. Move the paper guide [1] complete according to the amount of the mis-centering you checked in step 1 and adjust the center position of it.
6. Tighten ten screws [2].
7. Make another test print and check the amount of misalignment.

16.2.5 Pick-up roller load adjustment of the tray 3/4

This adjustment must be made in the following case:

- **In case a no feed jam occurs frequently.**

1. Pull out the tray where this adjustment is made.

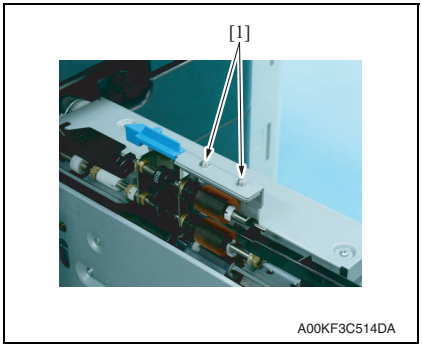

2. Remove two screws (M3 x 6 mm: V118 0306 03) [1].

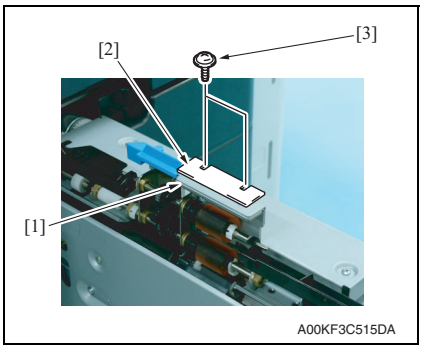

3. In the pick-up roller assy, put paper feed assist plate (A00J P001 ##) [2] on the paper feed assist plate holder [1], and fix them with two accompanying screws (M3 x 8 mm: V118 0308 03) [3].

4. Set the tray.

5. Perform test print to check whether the no feed or the double feed occurs or not.

16.3 Mechanical adjustment of the bypass tray section

16.3.1 Adjustment of the bypass paper size unit

This adjustment must be made in the following case:

- **The bypass paper size unit has been removed.**

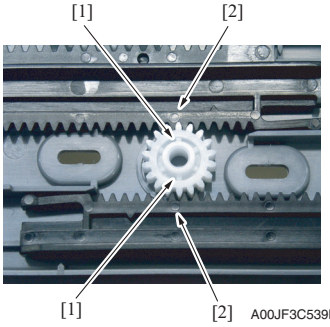

A00JF3C539DA

1. Align one of the six gear ribs [1] with the match mark [2] on the bypass guide rack gear.

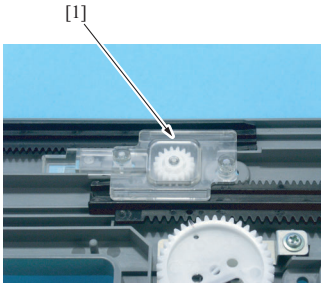

A00JF3C540DA

2. Attach the holder [1] with two screws.

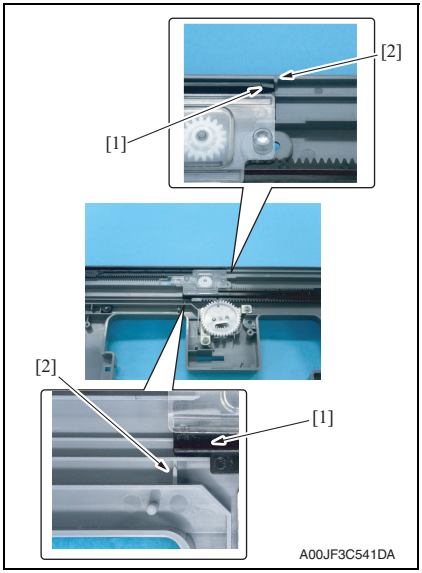

3. Install the bypass unit cover so that part A (edge) [1] of the rack gear for the bypass paper size unit and part B [2] of the bypass unit cover are aligned in a straight line.

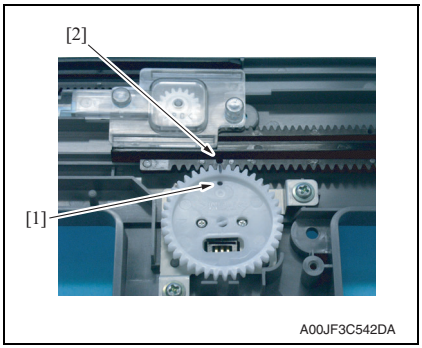

4. Align the mark of the gear [1] with the mark [2] on the rack gear so that those gears are engaged.

5. After the bypass paper size unit base has been mounted, check that the lever of the bypass paper size unit moves smoothly in a manner operatively connected to the bypass guide.
6. Call the Service Mode to the screen and select [Machine] → [Manual Bypass Tray Adjustment]. Then, carry out manual bypass tray adjustment.
See P.480

16.4 Mechanical adjustment of the main drive unit section

16.4.1 PC drive gear positioning adjustment

This adjustment must be made in the following case:

- **When the color PC drum motor was removed.**
  See P.166
- **When the main drive unit was removed.**
  See P.116

A. Checking method

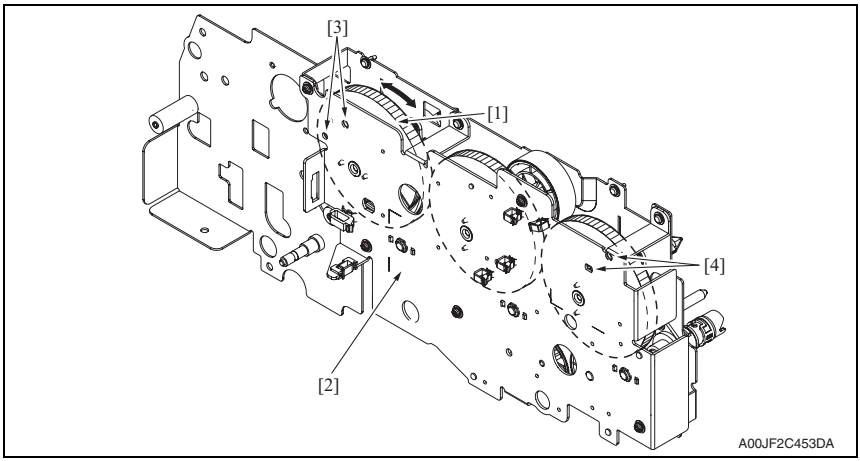

1. Slowly turn the PC drive gear/1 [1], and fit the hole A [3] and B [4] with the gear holes on the upper frame [2].
2. Visually check if the hole A [3] and B [4] are fit with each gear hole at the same time.

B. Adjusting method

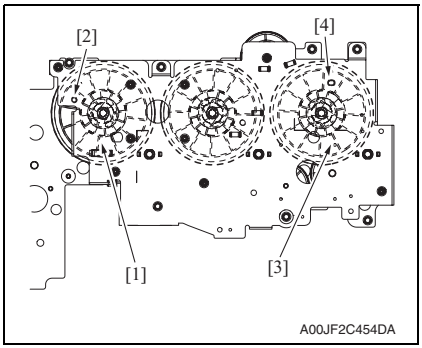

1. Turn the PC drive gear/1 [1], and fit the hole A [2] with the PC Gear/1 [1] hole while visually checking.
2. Fix the PC drive gear/1 [1], and then fit the hole B [3] with the PC drive gear/2 [4] hole while visually checking.

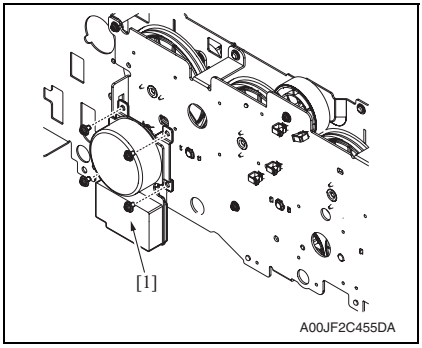

3. Mount the color PC drum motor [1] while two hole positions are well set.

Blank Page

TROUBLESHOOTING

17. JAM DISPLAY

- When the paper jam occurred, the message, the position jam occurred (number blinks), position of the remaining paper (number lights up), and the JAM code are displayed.

NOTE

- **JAM code is displayed on the jam warning screen only when the following setting is set to "Display."**
  [Service Mode] → [System 2] → [JAM Code Display Setting]

A0P0F4E512DA

17.1 List of JAM code

JAM code	JAM type	Detection timing	Misfeed processing location	Ref. page
10-01	Manual bypass feed section	• The leading edge of the paper does not turn ON the tray1 vertical transport sensor (PS4) even after the lapse of a given period of time after the manual bypass starts to feed paper.	Manual bypass tray door	P.679
10-02		• For paper fed from the manual bypass, loop forming has not been complete before a sheet enters the timing roller because the rise timing of load to perform registration is earlier than the rise timing of load to form a loop.		

JAM code	JAM type	Detection timing	Misfeed processing location	Ref. page
10-10	Manual bypass feed section	• The bypass paper limit sensor (PS35) is not blocked after the lapse of a predetermined period of time after the paper lifting plate is started to be raised from the standby position to the paper feed position. • For paper fed from the manual bypass tray, the bypass paper lower sensor (PS36) is not blocked after the lapse of a predetermined period of time after the paper lifting plate is started to be lowered from the paper feed position to the standby position.	Manual bypass tray door	P.679
10-40		• For paper fed from the manual bypass, the image write start signal permit continues to be disabled for a predetermined period of time after the timing of the image write start signal output.		
11-01	Tray 1 feed section	• The leading edge of the paper does not turn ON the tray1 vertical transport sensor (PS4) even after the lapse of a given period of time after the tray1 starts to feed paper.	Manual bypass tray door	P.680
11-02		• For paper fed from the tray1, due to a delay in paper arrival, loop forming in front of the timing roller is not complete before the rise timing of the registration motor.		
11-40		• For paper fed from the tray1, the image write start signal permit continues to be disabled for a predetermined period of time after the timing of the image write start signal output.		
-		• The tray1 vertical transport sensor (PS4) is turned ON when the main power switch is turned ON, a door or cover is opened and closed, or a misfeed or malfunction is reset.		
12-01	Tray 2 feed section	• The leading edge of the paper does not turn ON the tray2 vertical transport sensor (PS12) even after the lapse of a given period of time after the tray2 starts to feed paper.	Lower right door	P.680
12-40		• For paper fed from the tray2, the image write start signal permit continues to be disabled for a predetermined period of time after the timing of the image write start signal output.		
-		• Tray 2 vertical transport sensor (PS12) is turned ON when the main power switch is turned ON, a door or cover is opened and closed, or a misfeed or malfunction is reset.		

JAM code	JAM type	Detection timing	Misfeed processing location	Ref. page
13-01	Tray 3 feed section	• The leading edge of the paper does not block the tray3 paper feed sensor (PS21) even after the lapse of a given period of time after the tray 3 starts to feed paper.	Tray 3/4 horizontal transport unit	P.681
13-40		• For paper fed from the tray3, the image write start signal permit continues to be disabled for a predetermined period of time after the timing of the image write start signal output.		
-		• Tray3 paper feed sensor (PS21) is blocked when the main power switch is turned ON, a door or cover is opened and closed, or a misfeed or malfunction is reset.		
14-01	Tray 4 feed section	• The leading edge of the paper does not unblock the tray4 paper feed sensor (PS26) even after the lapse of a given period of time after the tray 4 starts to feed paper.	Lower right door	P.681
14-40		• For paper fed from the tray4, the image write start signal permit continues to be disabled for a predetermined period of time after the timing of the image write start signal output.		
-		• Tray 4 paper feed sensor (PS26) is unblocked when the main power switch is turned ON, a door or cover is opened and closed, or a misfeed or malfunction is reset.		
15-01	LCT feed section	• The leading edge of the paper does not block the paper feed sensor (PS3) even after the lapse of a given period of time after the LCT starts to feed paper.	Lower right door	P.683
15-40		• For paper fed from the LCT, the image write start signal permit continues to be disabled for a predetermined period of time after the timing of the image write start signal output.		
17-08	LCT transport section	• The paper feed sensor (PS3) is not turn OFF even after the set period of time has elapsed after it turns ON.	Lower right door	P.683
17-20		• The Tray2 vertical transport sensor (PS12) is not turn ON even after the set period of time has elapsed after the paper feed sensor (PS3) turns ON.		

JAM code	JAM type	Detection timing	Misfeed processing location	Ref. page
17-09	Tray 3/4 horizontal transport section	• The tray 3 paper feed sensor (PS21) is not unblocked even after the lapse of a given period of time after the paper has blocked the PS21.	Tray 3/4 horizontal transport unit	P.682
17-30		• The horizontal transport sensor (PS29) is not blocked even after the lapse of a given period of time after the paper has blocked the tray 3 paper feed sensor (PS21).		
17-31		• The intermediate roller sensor (PS28) is not unblocked even after the lapse of a given period of time after the paper has blocked the horizontal transport sensor (PS29).		
-		• Horizontal transport sensor (PS29) is blocked when the main power switch is turned ON, a door or cover is opened and closed, or a misfeed or malfunction is reset.		
17-10	Tray 3/4 intermediate transport roller section	• A sheet of paper does not block the tray4 paper feed sensor (PS26) after a predetermined period of time has elapsed since the sheet unblocks the PS26.	Lower right door, Tray 3/4 horizontal transport unit	P.682
17-11		• A sheet of paper does not unblock the horizontal transport sensor (PS29) after a predetermined period of time has elapsed since the sheet blocks the PS29.		
17-40		• A sheet of paper does not turn ON the intermediate roller sensor (PS28) after a predetermined period of time has elapsed since the sheet unblocks the tray4 paper feed sensor (PS26).		
17-41		• A sheet of paper does not turn ON the tray2 vertical transport sensor (PS12) after a predetermined period of time has elapsed since the sheet turns ON the intermediate roller sensor (PS28).		
-		• The intermediate roller sensor (PS28) is turned ON when the main power switch is turned ON, a door or cover is opened and closed, or a misfeed or malfunction is reset.		

JAM code	JAM type	Detection timing	Misfeed processing location	Ref. page
20-01	Vertical transport section	• The timing roller sensor (PS38) is not unblocked even after the lapse of a given period of time after the paper has turned ON the tray 1 vertical transport sensor (PS4).	Manual bypass tray door, Lower right door	P.684
20-03		• The OHP detection sensor (PS40) is not turned ON even after the lapse of a given period of time after the paper has turned ON the tray 1 vertical transport sensor (PS4).		
20-10		• The tray 1 vertical transport sensor (PS4) is not turned OFF even after the lapse of a given period of time after the paper has turned ON the PS4.		
20-11		• The tray2 vertical transport sensor (PS12) is not turned OFF even after the lapse of a given period of time after the paper has turned ON the PS12.		
20-12		• The intermediate roller sensor (PS28) is not blocked even after the lapse of a given period of time after the paper has unblocked the PS28.		
20-20		• The tray 1 vertical transport sensor (PS4) is not turned ON even after the lapse of a given period of time after the paper has turned ON the tray2 vertical transport sensor (PS12).		
20-02	Vertical transport section	• For paper fed from the tray 1/2/3/4 or LU-301, loop forming has not been complete before a sheet enters the timing roller because the rise timing of load to perform registration is earlier than the rise timing of load to form a loop.	Manual bypass tray door, Lower right door	

JAM code	JAM type	Detection timing	Misfeed processing location	Ref. page
30-01	2nd image transfer section	• A sheet of paper does not block the timing roller sensor (PS38) after a predetermined period of time has elapsed since the sheet unblocks PS38.	Upper right door	P.684
30-02		• A sheet of paper does not turn OFF the OHP detection sensor (PS40) after a predetermined period of time has elapsed since the sheet turns ON the PS40.		
30-03		• The leading edge of paper does not unblock the exhaust sensor (PS39) since the registration motor (M2) is activated.		
-		• The timing roller sensor (PS38) is unblocked when the main power switch is turned ON, a door or cover is opened and closed, or a misfeed or malfunction is reset. • The OHP detection sensor (PS40) is turned ON when the main power switch is turned ON, a door or cover is opened and closed, or a misfeed or malfunction is reset.		
32-01	Exit section	• The ADU paper passage sensor/1 (PS47) is not blocked even after the lapse of a given period of time after the switchback sequence is started.	Upper right door	P.685
32-05		• The exhaust sensor (PC39) is not blocked even after the lapse of a given period of time after the paper has unblocked PC39.		
32-30		• Fusing roller had a trouble rotating while printing.		
-		• The exhaust sensor (PC39) is unblocked when the main power switch is turned ON, a door or cover is opened and closed, or a misfeed or malfunction is reset.		
66-01	ADF turnover section	• The before read sensor (PS9) is not turned ON after a lapse of a given time after the reverse regist motion is performed.	Transportation cover	P.685
66-11		• The reverse registration sensor (PS8) is not turned OFF after a lapse of a given time after the reverse regist motion is performed.		
66-21		• The reverse registration sensor (PS8) is not turned ON after a lapse of a given time after the before read sensor (PS9) is turned OFF.		

JAM code	JAM type	Detection timing	Misfeed processing location	Ref. page
66-02	ADF paper feed section	• The after separate sensor (PS4) is not turned ON after a lapse of a given time after the take-up motor (M2) is turned ON.	Transportation cover	P.686
66-12		• The size of the original on the tray detected by ADF does not match the size of the original detected by the main unit.		
66-03	ADF transport section	• The after separate sensor (PS4) is not turn OFF even after the set period of time has elapsed after it turns ON.		P.686
66-13		• The registration sensor (PS3) is not turned ON after a lapse of a given time after the after separate sensor (PS4) is turned ON.		
66-23		• The registration sensor (PS3) is not turned OFF after a lapse of given time after the after separate sensor (PS4) is turned OFF.		
66-33		• The before read sensor (PS9) is not turned ON after a lapse of a given time after the registration sensor (PS3) is turned ON.		
66-04	ADF paper exit section	• The exit sensor (PS5) is not turned ON after a lapse of a given time after the before read sensor (PS9) is turned ON.		P.687
66-14		• The exit sensor (PS5) is not turned OFF after a lapse of a given time after the before read sensor (PS9) is turned OFF.		
66-24		• The exit sensor (PS5) is not turned ON after a lapse of a given time after the before read sensor (PS9) is turned OFF.		
66-34		• The exit sensor (PS5) is not turned OFF after a lapse of a given time after the turn-over and paper exit motion is performed.		
66-05	ADF image reading section	• The before read sensor (PS9) is not turned OFF after a lapse of a given time after the registration sensor (PS3) is turned OFF.		P.687
66-15		• The before read sensor (PS9) is not turned OFF after a lapse of a given time after the reverse registration sensor (PS8) is turned OFF.		
66-06		• The before read sensor (PS9) is turned ON earlier than a given time after the before read sensor (PS9) is turned OFF during original transportation.		
66-07		• Due to a remaining sheet of paper that has not been detected by sensors, before the start of a job, a sensor detects the sheet at an unexpected timing.		

JAM code	JAM type	Detection timing	Misfeed processing location	Ref. page
72-11	FS transport section	• The Z-fold punch regist sensor (PS2) is not turned ON even after the set period of time has elapsed after the FNS pass sensor (PS1) is turned ON by the paper.	Front door	P.688
72-13		• The Z-fold punch regist sensor (PS2) is not turn OFF even after the set period of time has elapsed after it turns ON.	Front door	P.688
72-14		<When FS-526 is installed> • The center staple pass sensor (PS12) is not turned ON even after the set period of time has elapsed after the FNS pass sensor (PS1) is turned ON by the paper. <When FS-527 is installed> • The saddle path sensor (PS11) is not turned ON even after the set period of time has elapsed after the lower path sensor (PS9) is turned ON by the paper.	Front door Horizontal conveyance cover	P.688
72-15		<When FS-526 is installed> • The center staple pass sensor (PS12) is not turn OFF even after the set period of time has elapsed after it turns ON. <When FS-527 is installed> • The saddle path sensor (PS11) is not turn OFF even after the set period of time has elapsed after it turns ON.	Front door Horizontal conveyance cover	P.689
72-16		<When FS-526 is installed> • The FNS pass sensor (PS1) is not turned ON even after the set period of time has elapsed after the copier's exhaust sensor (PS39) is turned ON by the paper. <When FS-527 is installed> • The paper passage sensor/1 (PS1) is not turned ON even after the set period of time has elapsed after the copier's exhaust sensor (PS39) is turned ON by the paper. • The paper passage sensor/1 (PS1) is not turned OFF even after the set period of time has elapsed after it is turned ON by the paper.	Front door Horizontal conveyance cover	P.690
72-17		<When FS-526 is installed> • The sub tray exit sensor (PS8) is not turned ON even after the set period of time has elapsed after the FNS pass sensor (PS1) is turned ON by the paper. <When FS-527 is installed> • The paper passage sensor/2 (PS2) is not turned ON even after the set period of time has elapsed after the paper passage sensor/1 (PS1) is turned ON by the paper. • The paper passage sensor/2 (PS2) is not turn OFF even after the set period of time has elapsed after it turns ON.	Front door Horizontal conveyance cover	P.690

JAM code	JAM type	Detection timing	Misfeed processing location	Ref. page
72-18	FS transport section	<When FS-526 is installed> • The 2 staples stacker sensor (PS3) is not turned ON even after the set period of time has elapsed after the Z-fold punch regist sensor (PS2) is turned ON by the paper. <When FS-527 is installed> • The registration sensor (PS10) is not turned ON even after the set period of time has elapsed after the paper passage sensor/2 (PS2) is turned ON by the paper. • The registration sensor (PS10) is not turn OFF even after the set period of time has elapsed after it turns ON.	Front door Horizontal convey-ance cover	P.691
72-19		<When FS-526 is installed> • The 2 staples stacker sensor (PS3) is not turn OFF even after the set period of time has elapsed after it turns ON. <When FS-527 is installed> • The lower path sensor (PS9) is not turned ON even after the set period of time has elapsed after the registration sensor (PS10) is turned ON by the paper. • The lower path sensor (PS9) is not turn OFF even after the set period of time has elapsed after it turns ON. • The upper path sensor (PS8) is not turned ON even after the set period of time has elapsed after the registration sensor (PS10) is turned ON by the paper. • The upper path sensor (PS8) is not turn OFF even after the set period of time has elapsed after it turns ON. • The lower path sensor (PS9) is not turned ON by the paper even after the set period of time has elapsed after the switchback operation caused by the conveyance motor (M4) is completed. • After the switchback operation caused by the conveyance motor (M4) is completed, the lower path sensor (PS9) is not turned OFF even after the set period of time has elapsed after PS9 is turn ON by the paper.	Front door	P.692

	JAM code	JAM type	Detection timing	Misfeed processing location	Ref. page
1	72-21	FS exit section	<When FS-526 is installed> • The 2 staples stacker empty sensor (PS15) is not turn OFF even after the set period of time has elapsed after the start of exiting paper. <When FS-527 is installed> • The tray1 paper detection sensor (PS16) is not turned ON even after the set period of time has elapsed after the lower path sensor (PS9) is turned ON by the paper.	Front door	P.692
1	72-22		<When FS-526 is installed> • The sub tray exit sensor (PS8) is not turned ON even after the set period of time has elapsed after the Z-fold punch regist sensor (PS2) is turned ON by the paper. <When FS-527 is installed> • The tray2 path sensor (PS6) is not turned ON even after the set period of time has elapsed after the registration sensor (PS10) is turned ON by the paper. • The tray2 path sensor (PS6) is not turn OFF even after the set period of time has elapsed after it turns ON.	Front door	P.693
	72-23		• The sub tray exit sensor (PS8) is not turn OFF even after the set period of time has elapsed after it turns ON.	Front door	P.694
	72-25	SD exit section	• SD exit sensor/LED (PS28) is not turned ON by the paper even after the set period of time has elapsed after the half-fold exit operation started.	Front door, stacker unit	P.694
1	72-26		<When FS-526+SD-508 is installed> • The SD exit sensor/LED (PS28) is not turn OFF even after the set period of time has elapsed after it turns ON. <When FS-527+SD-509 is installed> • The paper detection sensor/2 (PS44) is not turn OFF even after the set period of time has elapsed after it turns ON.		
1	72-31	JS exit section	• The job tray paper exit sensor (PS402) is not turned ON even after the set period of time has elapsed after the z-fold Punch regist sensor (PS2) is turned ON by the paper.	Separator cover	P.695
	72-34		• The job tray paper exit sensor (PS402) is not turn OFF even after the set period of time has elapsed after it turns ON.		
1	72-35	PI section	• The paper entrance sensor /Lw (PS206) is not turned ON even after the set period of time has elapsed after the transfer clutch / Lw (CL202) is turned ON by the paper.	Upper door	P.695

	JAM code	JAM type	Detection timing	Misfeed processing location	Ref. page
1	72-38	ZU section	• None of the leading, trailing, or side edge sensor on the paper size detect board (PSDTB) is turned ON even after the set period of time has elapsed after the paper pass sensor (PS202) in the horizontal transport unit is turned ON by the paper.	Front door	P.695
1	72-39		• None of the leading, trailing, or side edge sensor on the paper size detect board (PSDTB) is turned OFF even after the set period of time has elapsed after one of these sensors is turned ON by the paper.	Front door	P.696
1	72-40		• The conveyance sensor (PS601) is not turned ON even after the set period of time has elapsed after the leading, trailing, or side sensor on the paper size detect board (PSDTB) is turned ON by the paper.	Front door	P.696
1	72-41		• When the second fold is started in Z-fold mode, the conveyance sensor (PS601) is not switched from ON to OFF by the paper after the set period of time has elapsed.	Front door, Z folding/ conveyance unit	P.696
1	72-42		• After the second fold is completed in Z-fold mode, the conveyance sensor (PS601) is not switched from ON to OFF by the paper even after the set period of time has elapsed.	Front door	
1	72-43	PK section	<When FS-526+PK-516 is installed> • PK punch home sensor (PS301) does not turn ON even after the set period of time has elapsed after the leading edge detection started. <When FS-527+PK-517 is installed> • Though the punch home sensor/1 (PS100) is not turned ON after the punch motor/1 (M100) starts rotating forward, PS100 is turned ON after M100 starts rotating backward.	Front door	P.697
1	72-44	ZU section	• The exit sensor (PS609) is not turned ON even after the set period of time has elapsed after the leading, trailing, or side edge sensor on the paper size detect board (PSDTB) is turned ON by the paper.	Front door	P.698
1	72-45		• The exit sensor (PS609) is not turned ON even after the set period of time has elapsed after the paper pass sensor (PS202) in the horizontal transport unit is turned ON by the paper.	Front door	P.698
1	72-46		• The exit sensor (PS609) is not turn OFF even after the set period of time has elapsed after it turns ON.	Front door	P.698

	JAM code	JAM type	Detection timing	Misfeed processing location	Ref. page
1	72-47	ZU section	• Paper remains in the Z-fold unit even after the set period of time has elapsed after MFP sends a processing stop signal to the Z-fold unit.	Front door, Z folding/ conveyance unit	P.698
1	72-49	PI section	• The paper entrance sensor /Up (PS201) is not turned ON even after the set period of time has elapsed after the transfer clutch / Up (CL201) is turned ON by the paper.	Upper door	P.699
	72-50		• The FNS pass sensor (PS1) is not turned ON even after the set period of time has elapsed after the paper entrance sensor / Up (PS201) is turned ON by the paper.	Upper door	P.699
	72-51		• The FNS pass sensor (PS1) is not turned ON even after the set period of time has elapsed after the paper entrance sensor / Lw (PS206) is turned ON by the paper.	Upper door	P.699
1	72-60	ZU section	• The corresponding side edge sensor on the paper size detect board (PSDTB) is not turned ON even after the set period of time has elapsed after the leading, trailing, or side edge sensor on PSDTB is turned OFF by the paper. Or the punch home sensor (PS606) is not turned ON by the paper even after the set period of time has elapsed after the punch clutch (CL601) is turned ON.	Front door, Z folding/ conveyance unit	P.700
1	72-61		• The conveyance sensor (PS601) is turned ON after the set period of time has elapsed even after the leading, trailing, or side edge sensor on the paper size detect board (PSDTB) is turned ON by the paper.	Front door	P.700
1	72-62		• The exit sensor (PS609) is not turned ON even after the set period of time has elapsed after the conveyance sensor (PS609) is turned ON by the paper.	Front door	P.700
1	72-64		• The conveyance encoder sensor (PS610) is not turned ON or OFF even after the set period of time has elapsed after the main motor (M606) starts running.	Front door, Z folding/ conveyance unit	P.701
	72-81	FS staple section	<When FS-526 is installed> • Stapler position sensor/4 (PS53) does not turn ON even after the set period of time has elapsed after the side-staple operation started. <When FS-527 is installed> • Though the stapler sensor (PS27) is not turned ON after the stapler motor (M18) starts rotating forward, PS27 is turned ON after M18 starts rotating backward.	Front door	P.701

	JAM code	JAM type	Detection timing	Misfeed processing location	Ref. page
	72-84	SD staple section	• Stapler home sensor (PS33) does not turn ON even after the set period of time has elapsed after the center-staple operation started.	Front door, stacker unit	P.702
⚠1	72-85		<When FS-526+SD-508 is installed> • The stapler home sensor (PS33) is not turned ON even after the set period of time has elapsed after saddle stitch stapling is started. <When FS-527+SD-509 is installed> • Though the saddle stapler home sensor is not turned ON after the saddle stapler motor starts rotating forward, the saddle stapler home sensor is turned ON after the saddle stapler motor starts rotating backward.	Front door, stacker unit	P.702
⚠1	72-86	SD transport section	<When FS-527+SD-509 is installed> • The paper detection sensor/1 (PS43) is not turned ON even after the set period of time has elapsed after the saddle path sensor (PS11) is turned ON by the paper.	Front door, stacker unit	P.703
⚠1	72-87		<When FS-527+SD-509 is installed> • The paper detection sensor/2 (PS44) is not turned ON even after the set period of time has elapsed after the saddle path sensor (PS11) is turned ON by the paper.		P.703
	75-42	RU section	• The Paper pass sensor (PS202) is not turned ON even after the set period of time has elapsed after the copier's exhaust sensor (PS39) is turned ON by the paper.	Horizontal transport cover	P.704
	75-43		• The Paper pass sensor (PS202) is not turn OFF even after the set period of time has elapsed after it turns ON.		P.704

JAM code	JAM type	Detection timing	Misfeed processing location	Ref. page
92-01	Duplex pre-registration section	• The timing roller sensor (PS38) is not unblocked even after the lapse of a given period of time after a duplex paper feed sequence has been started.	Upper right door, Duplex door	P.705
92-02		• For the second-side feed of paper in the duplex mode, loop forming has not been complete before the second side of a sheet enters the timing roller because the rise timing of load to perform registration is earlier than the rise timing of load to form a loop.		
92-03		• The OHP detection sensor (PS40) is not turned ON even after the lapse of a given period of time after a duplex paper feed sequence has been started.		
92-40		• For the second-side feed of paper in the duplex mode, the image write start signal permit continues to be disabled for a predetermined period of time after the timing of the image write start signal output.		
93-01	Duplex transport section	• A sheet of paper does not unblock the ADU paper passage sensor/1 (PS47) after a predetermined period of time has elapsed since the sheet blocks the PS47.	Duplex door	P.705
93-10		• A sheet of paper does not unblock the ADU paper passage sensor/2 (PS48) after a predetermined period of time has elapsed since the sheet blocks the ADU paper passage sensor/1 (PS47).		
-		• ADU paper passage sensor/1 (PS47) is blocked, or ADU paper passage sensor/2 (PS48) is unblocked when the main power switch is turned ON, a door or cover is opened and closed, or a misfeed or malfunction is reset.		
99-01	Controller JAM	• Forced stop command was sent from the controller to the printer engine due to the error in paper size, media, etc. • Media error has occurred in both sides printing.	-	-

17.1.1 Misfeed display resetting procedure

- Open the corresponding door, clear the sheet of paper misfed, and close the door.

17.2 Sensor layout

17.2.1 Main body

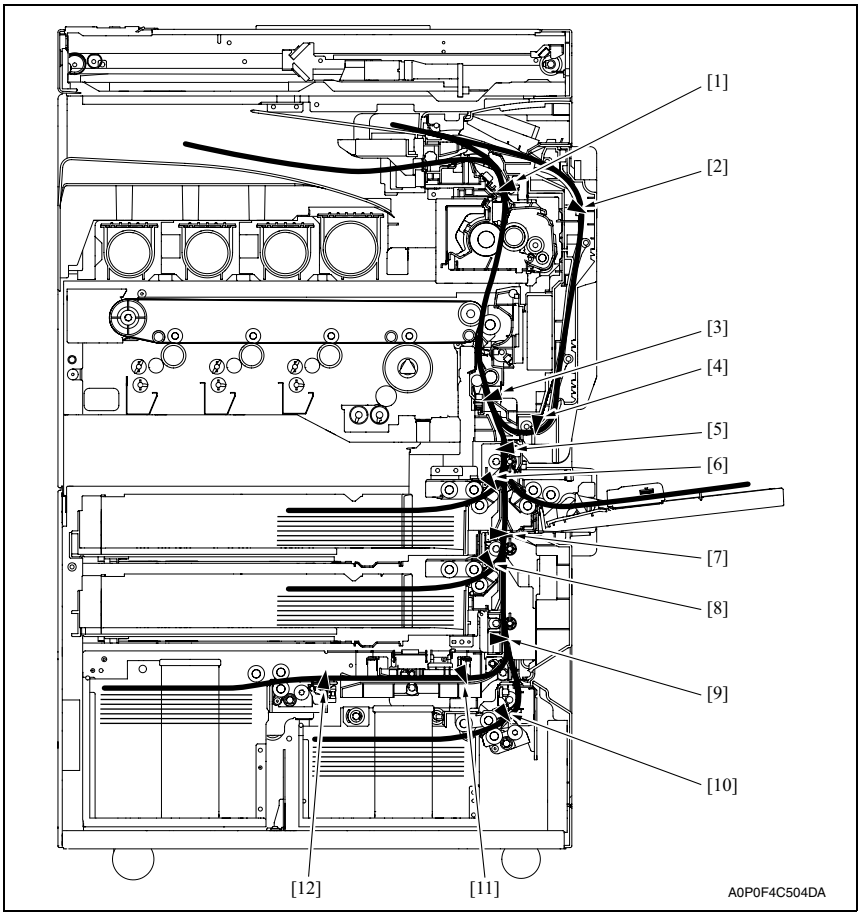

[1]	Paper exit sensor	PS39	[7]	Tray 2 vertical transport sensor	PS12
[2]	ADU paper passage sensor/1	PS47	[8]	Tray2 paper feed sensor	PS13
[3]*1	Timing roller sensor	PS38	[9]	Intermediate roller sensor	PS28
[3]*1	OHP detection sensor	PS40	[10]	Tray 4 paper feed sensor	PS26
[4]	ADU paper passage sensor/2	PS48	[11]	Horizontal transport sensor	PS29
[5]	Tray 1 vertical transport sensor	PS4	[12]	Tray 3 paper feed sensor	PS21
[6]	Tray1 paper feed sensor	PS5			

*1: Two different types of sensors are located in the area near [3].

17.2.2 ADF

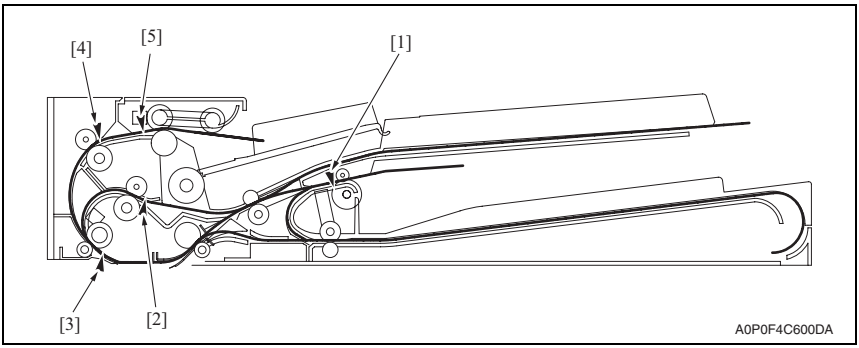

[1] Exit sensor (PS5)
[2] Reverse registration sensor (PS8)
[3] Before read sensor (PS9)
[4] Registration sensor (PS3)
[5] After separate sensor (PS4)

17.2.3 LU-204/LU-301

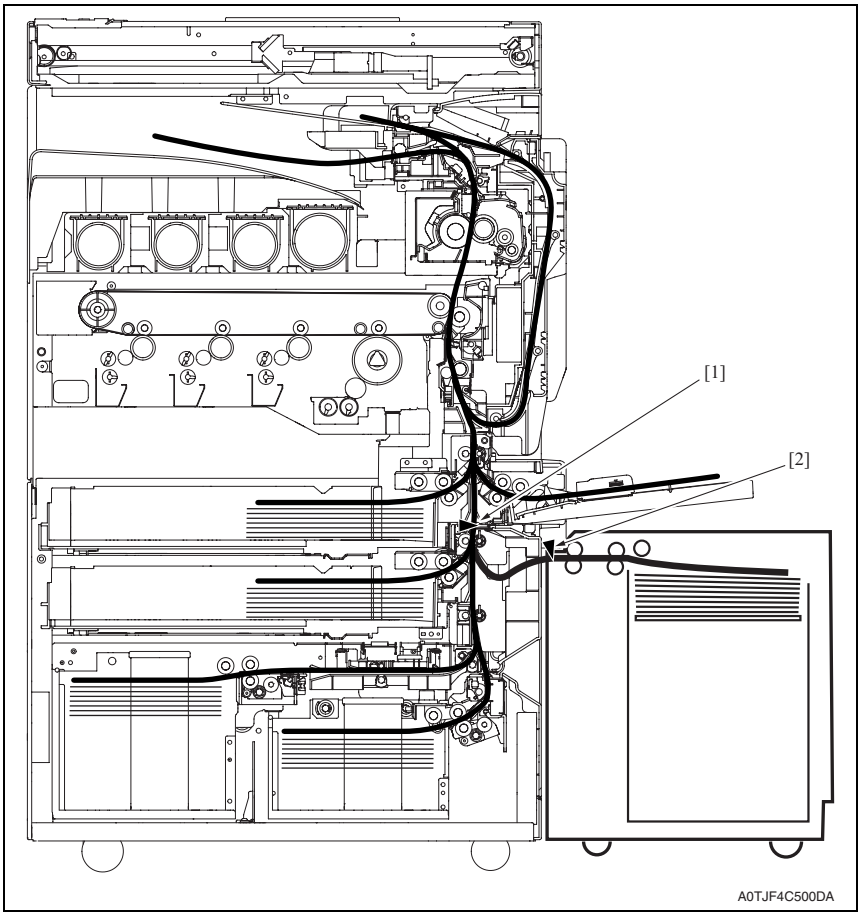

[1] Tray2 vertical transport sensor (PS12) [2] Paper feed sensor (PS3)

17.2.4 JS-504

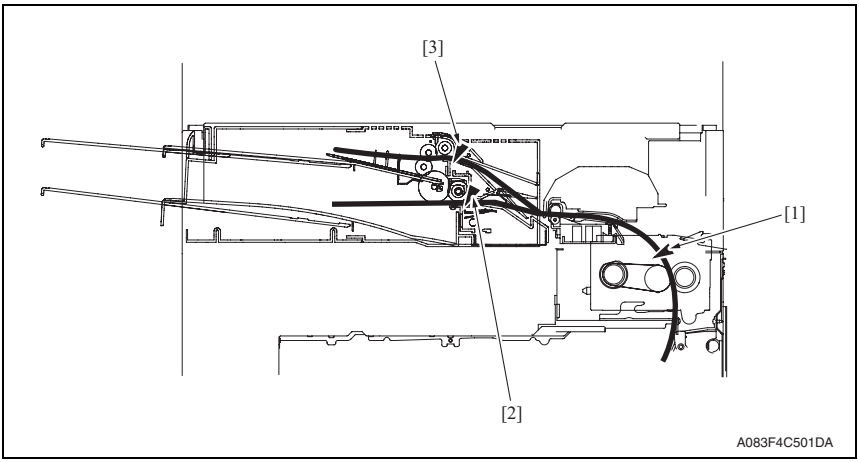

[1] Paper exit sensor (PS39)
[2] Lower tray exit sensor (PS1)
[3] Upper tray exit sensor (PS2)

17.2.5 ZU-606

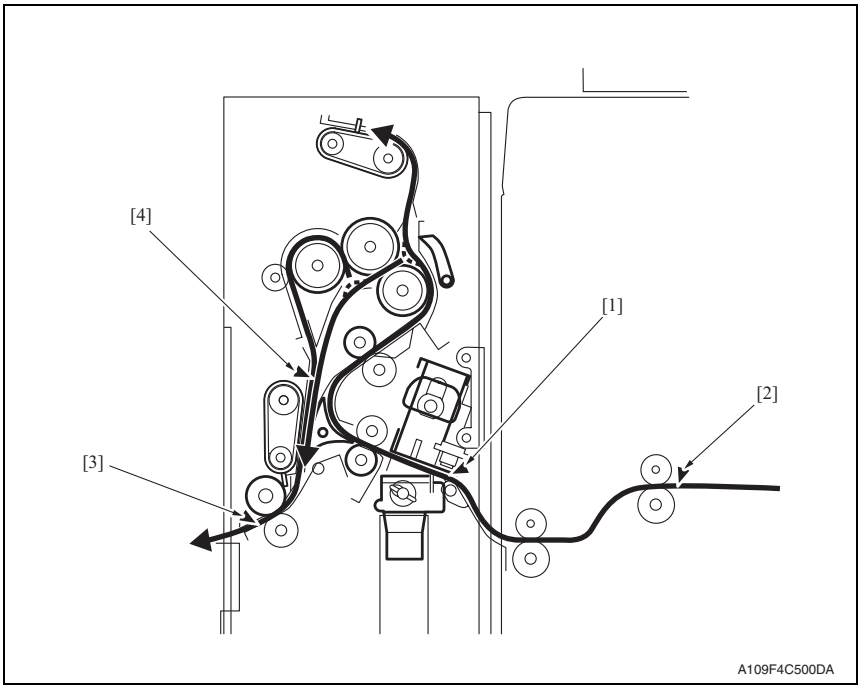

[1] Paper size detect board (PSDTB)
[2] Paper pass sensor (PS202)
[3] Exit sensor (PS609)
[4] Conveyance sensor (PS601)

17.2.6 FS-526/SD-508/PK-516

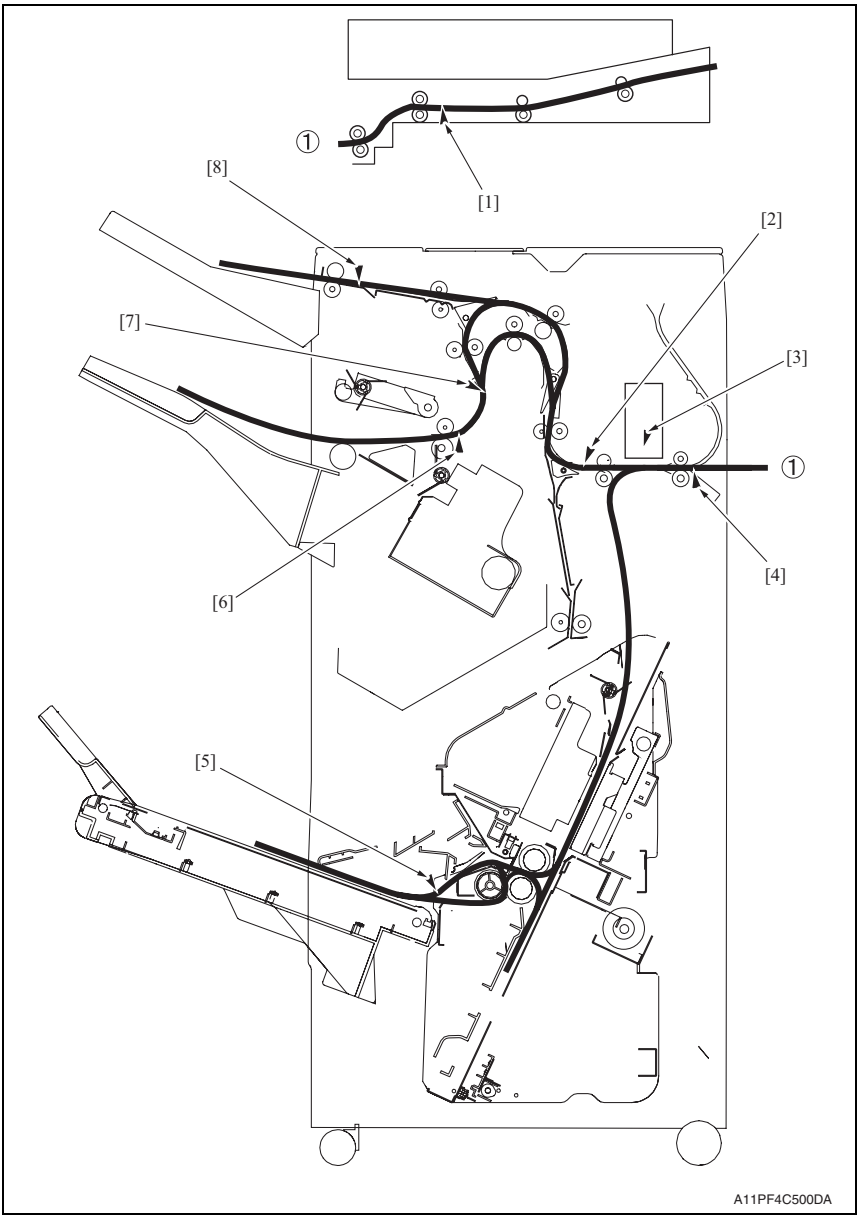

[1] Paper pass sensor (PS202)
[2] Z-fold punch regist sensor (PS2)
[3] PK punch home sensor (PS301)
[4] FNS pass sensor (PS1)
[5] SD exit sensor/PR (PS29)
[6] 2 staples stacker sensor (PS3)
[7] 2 staples stacker empty sensor (PS15)
[8] Sub tray exit sensor (PS8)

17.2.7 JS-602

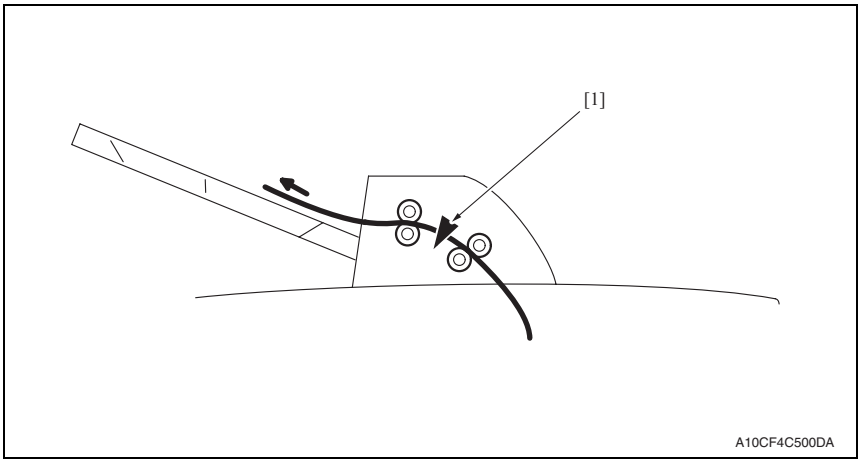

[1] Job tray paper exit sensor (PS402)

17.2.8 PI-505

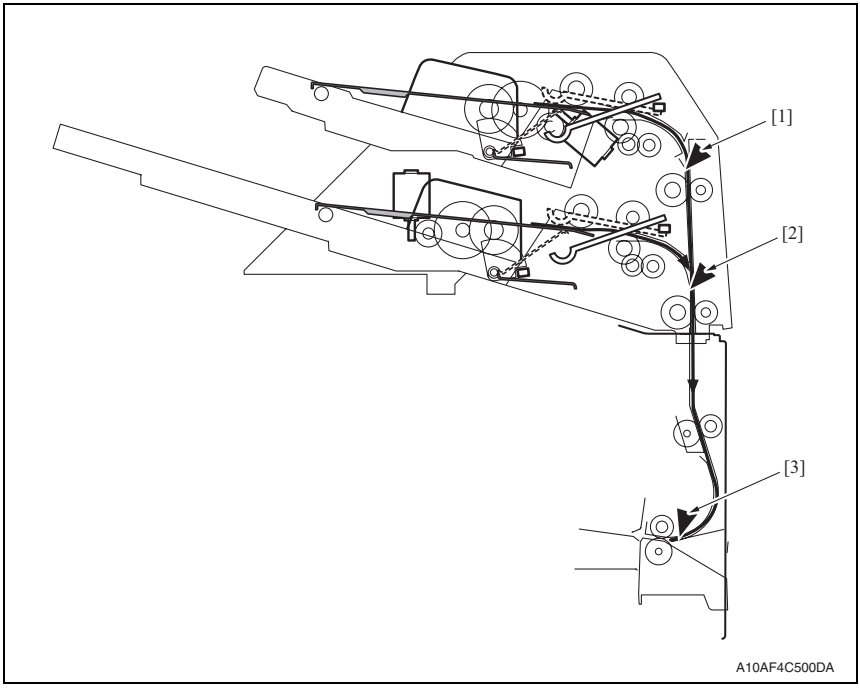

[1] Paper entrance sensor /Up (PS201)
[2] Paper entrance sensor /Lw (PS206)
[3] FNS pass sensor (PS1)

17.2.9 FS-527/SD-509/PK-517/JS-603

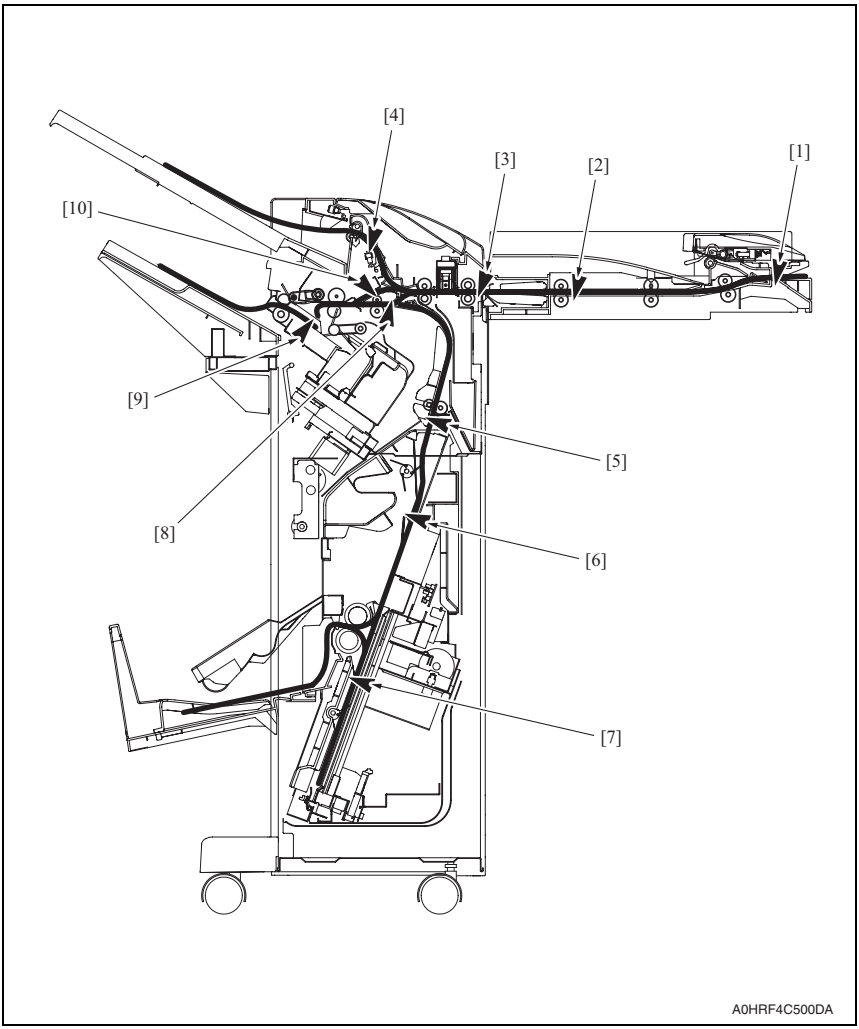

[1] Paper passage sensor/1 (PS1)
[2] Paper passage sensor/2 (PS2)
[3] Registration sensor (PS10)
[4] Tray2 path sensor (PS6)
[5] Saddle path sensor (PS11)
[6] Paper detection sensor/1 (PS43)
[7] Paper detection sensor/2 (PS44)
[8] lower path sensor (PS9)
[9] Tray1 paper detection sensor (PS16)
[10] Upper path sensor (PS8)

17.3 Solution

17.3.1 Initial check items

- When a paper misfeed occurs, first perform the following initial check items.

Check item	Action
Does paper meet product specifications?	Replace paper.
Is the paper curled, wavy, or damp?	Replace paper.
Is a foreign object present along the paper path, or is the paper path deformed or worn?	Clean the paper path and replace if necessary.
Are rolls/rollers dirty, deformed, or worn?	Clean or replace the defective roll/roller.
Are the edge guide and trailing edge stop at the correct position to accommodate the paper?	Set as necessary.
Are the actuators operating correctly?	Correct or replace the defective actuator.

17.3.2 Misfeed at manual bypass feed section

Relevant parts	
Bypass paper feed motor (M27) Tray 1 vertical transport sensor (PS4) Bypass paper limit sensor (PS35) Bypass paper lower sensor (PS36)	Paper feed/transport drive board (PFTDB) Printer control board (PRCB)

Step	Action	WIRING DIAGRAM	
		Control signal	Location (Electrical component)
1	Initial check items	—	—
2	PS4 I/O check, sensor check	PFTDB CN11-8 (ON)	Q-2
3	PS35 I/O check, sensor check	PFTDB CN6<B>-10 (ON)	Q-12
4	PS36 I/O check, sensor check	PFTDB CN6<A>-11 (ON)	Q-11
5	M27 operation check	PFTDB CN6<B>-1~4	Q-11
6	Change PFTDB	—	—
7	Change PRCB	—	—

17.3.3 Misfeed at tray 1 feed section

Relevant parts	
Take-up motor (M22) Tray 1 paper feed clutch (CL1) Tray1 vertical transport sensor (PS4)	Paper feed/transport drive board (PFTDB) Printer control board (PRCB)

Step	Action	WIRING DIAGRAM	
		Control signal	Location (Electrical component)
1	Initial check items	—	—
2	PS4 I/O check, sensor check	PFTDB CN11-8 (ON)	Q-2
3	CL1 operation check	PFTDB CN11-14 (REM)	Q-2 to 3
4	M22 operation check	PFTDB CN8-5 to 8	X-12
5	PFTDB ICP1 or ICP3 conduction check	—	—
6	Change PFTDB	—	—
7	Change PRCB	—	—

17.3.4 Misfeed at tray 2 feed section

Relevant parts	
Take-up motor (M22) Tray 2 paper feed clutch (CL2) Tray 2 vertical transport sensor (PS12)	Paper feed/transport drive board (PFTDB) Printer control board (PRCB)

Step	Action	WIRING DIAGRAM	
		Control signal	Location (Electrical component)
1	Initial check items	—	—
2	PS12 I/O check, sensor check	PFTDB CN10<B>-2 (ON)	Q-4
3	CL2 operation check	PFTDB CN10<A>-1 (REM)	Q-3
4	M22 operation check	PFTDB CN8-5 to 8	X-12
5	PFTDB ICP1 or ICP3 conduction check	—	—
6	Change PFTDB	—	—
7	Change PRCB	—	—

17.3.5 Misfeed at tray 3 feed section

Relevant parts	
Transport motor (M25) Tray 3 paper feed clutch (CL5) Tray 3 paper feed sensor (PS21)	Paper feed/transport drive board (PFTDB) Printer control board (PRCB)

Step	Action	WIRING DIAGRAM	
		Control signal	Location (Electrical component)
1	Initial check items	—	—
2	PS21 I/O check, sensor check	PFTDB CN16-9 (ON)	X-6
3	CL5 operation check	PFTDB CN15-5 (REM)	X-5
4	M25 operation check	PFTDB CN13-6 (LOCK)	X-11
⚠1 5	PFTDB ICP4 conduction check	—	—
6	Change PFTDB	—	—
7	Change PRCB	—	—

17.3.6 Misfeed at tray 4 feed section

Relevant parts	
Transport motor (M25) Tray 4 paper feed clutch (CL7) Tray 4 paper feed sensor (PS26)	Paper feed/transport drive board (PFTDB) Printer control board (PRCB)

Step	Action	WIRING DIAGRAM	
		Control signal	Location (Electrical component)
1	Initial check items	—	—
2	PS26 I/O check, sensor check	PFTDB CN18-3 (ON)	X-7~8
3	CL7 operation check	PFTDB CN17-2 (REM)	X-7
4	M25 operation check	PFTDB CN13-6 (LOCK)	X-11
⚠1 5	PFTDB ICP4 conduction check	—	—
6	Change PFTDB	—	—
7	Change PRCB	—	—

17.3.7 Misfeed at tray 3/4 horizontal transport section

Relevant parts	
Transport motor (M25) Tray 3 transport clutch (CL6) Horizontal transport clutch (CL3) Tray 3 paper feed sensor (PS21) Horizontal transport sensor (PS29)	Paper feed/transport drive board (PFTDB) Printer control board (PRCB)

Step	Action	WIRING DIAGRAM	
		Control signal	Location (Electrical component)
1	Initial check items	—	—
2	PS21 I/O check, sensor check	PFTDB CN16-9 (ON)	X-6
3	PS29 I/O check, sensor check	PFTDB CN14-13 (ON)	X-10
4	CL3 operation check	PFTDB CN14-5 (REM)	X-9
5	CL6 operation check	PFTDB CN16-10 (REM)	X-6
6	M25 operation check	PFTDB CN13-6 (LOCK)	X-11
7	PFTDB ICP4 or ICP5 conduction check	—	—
8	Change PFTDB	—	—
9	Change PRCB	—	—

17.3.8 Misfeed at tray 3/4 intermediate transport roller section

Relevant parts	
Tray 2 vertical transport sensor (PS12) Tray 4 paper feed sensor (PS26) Intermediate roller sensor (PS28) Horizontal Transport sensor (PS29)	Paper feed/transport drive board (PFTDB) Printer control board (PRCB) Transport motor (M25) Vertical transport motor (M26) Tray 2 vertical transport motor (M7) Horizontal transport clutch (CL3)

Step	Action	WIRING DIAGRAM	
		Control signal	Location (Electrical component)
1	Initial check items	—	—
2	PS12 check, sensor check	PFTDB CN10<B>-2 (ON)	Q-4
3	PS26 check, sensor check	PFTDB CN18-3 (ON)	X-7 to 8
4	PS28 I/O check, sensor check	PFTDB CN14-15 (ON)	X-10
5	PS29 I/O check, sensor check	PFTDB CN14-13 (ON)	X-10
6	CL3 operation check	PFTDB CN14-5 (REM)	X-9
7	M25 operation check	PFTDB CN13-6 (LOCK)	X-11
8	M26 operation check	PFTDB CN12-1 to 4	X-10 to 11
9	M7 operation check	PFTDB CN8-9 to 12	X-12
10	PFTDB ICP1 conduction check	—	—
11	Change PFTDB	—	—
12	Change PRCB	—	—

17.3.9 LCT feed section

Relevant parts	
Paper feed motor (M2) Paper feed sensor (PS3)	LU drive board (LUDB) Paper feed/transport drive board (PFTDB)

Step	Action	WIRING DIAGRAM	
		Control signal	Location (Electrical component)
1	Initial check items	—	—
2	PS3 I/O check, sensor check	LUDB CN5-8 (ON)	LU-204/LU-301 G-4
3	M2 operation check	LUDB CN4-5 to 6	LU-204/LU-301 G-3
4	Change LUDB	—	—
5	PFTDB ICP1 conduction check	—	—
6	Change PFTDB	—	—

17.3.10 LCT transport section

Relevant parts	
Paper feed sensor (PS3) Tray2 vertical transport sensor (PS12)	LU drive board (LUDB) Paper feed/transport drive board (PFTDB)

Step	Action	WIRING DIAGRAM	
		Control signal	Location (Electrical component)
1	Initial check items	—	—
2	PS3 I/O check, sensor check	LUDB CN5-8 (ON)	LU-204/LU-301 G-4
3	PS12 I/O check, sensor check	PFTDB CN10<B>-2 (ON)	bizhub C652/552 Q-4
4	Change LUDB	—	—
5	PFTDB ICP1 conduction check	—	—
6	Change PFTDB	—	—

17.3.11 Misfeed at vertical transport section

Relevant parts	
Tray 1 vertical transport motor (M5) Tray 2 vertical transport motor (M7) Vertical transport motor (M26) Tray 1 vertical transport sensor (PS4) Tray 2 vertical transport sensor (PS12) Intermediate roller sensor (PS28) Timing roller sensor (PS38) OHP detection sensor (PS40)	Paper feed/transport drive board (PFTDB) Printer control board (PRCB)

Step	Action	WIRING DIAGRAM	
		Control signal	Location (Electrical component)
1	Initial check items	—	—
2	PS4 I/O check, sensor check	PFTDB CN11-8 (ON)	Q-2
3	PS12 I/O check, sensor check	PFTDB CN10<B>-2 (ON)	Q-4
4	PS28 I/O check, sensor check	PFTDB CN14-15 (ON)	X-10
5	PS38 I/O check, sensor check	PFTDB CN4-6 (ON)	Q-5
6	PS40 I/O check, sensor check	PFTDB CN4-2 (ON)	Q-4 to 5
7	M5 operation check	PFTDB CN8-1 to 4	X-11
8	M7 operation check	PFTDB CN8-9 to 12	X-12
9	Change PFTDB	—	—
10	Change PRCB	—	—

17.3.12 Misfeed at 2nd image transfer section

Relevant parts	
Registration motor (M2) Fusing motor (M30) Timing roller sensor (PS38) OHP detection sensor (PS40) Paper exit sensor (PS39)	Paper feed/transport drive board (PFTDB) Printer control board (PRCB)

Step	Action	WIRING DIAGRAM	
		Control signal	Location (Electrical component)
1	Initial check items	—	—
2	PS38 check, sensor check	PFTDB CN4-6 (ON)	Q-5
3	PS40 I/O check, sensor check	PFTDB CN4-2 (ON)	Q-4 to 5
4	PS39 I/O check, sensor check	PFTDB CN4-12 (ON)	Q-5
5	M2 operation check	PFTDB CN9-1 to 4	Q-9
6	M30 operation check	PRCB CN9-3 (REM) PRCB CN9-6 (LOCK)	K-8
7	Change PFTDB	—	—
8	Change PRCB	—	—

17.3.13 Misfeed at exit section

Relevant parts	
Exit motor (M4) Fusing motor (M30) Switchback motor (M33) Gate switch solenoid (SD1) Paper exit sensor (PS39) ADU paper passage sensor/1 (PS47)	Paper feed/transport drive board (PFTDB) Printer control board (PRCB)

Step	Action	WIRING DIAGRAM	
		Control signal	Location (Electrical component)
1	Initial check items	—	—
2	PS39 I/O check, sensor check	PFTDB CN4-12 (ON)	Q-5
3	PS47 I/O check, sensor check	PFTDB CN3-3 (ON)	Q-7
4	M4 operation check	PRCB CN18-17 to 20	C-14
5	M30 operation check	PRCB CN9-3 (REM) PRCB CN9-6 (LOCK)	K-8
6	M33 operation check	PRCB CN18-13 to 16	C-14
7	SD1 operation check	PRCB CN18-7 (REM)	C-13
8	Change PFTDB	—	—
⚠1 9	PFTDB ICP7 conduction check	—	—
10	Change PRCB	—	—

17.3.14 ADF turnover section

Relevant parts	
Switchback roller pressure/retraction motor (M5) Before read sensor (PS9) Reverse registration sensor (PS8)	DF control board (DFCB)

Step	Action	WIRING DIAGRAM	
		Control signal	Location (Electrical component)
1	Initial check items	—	—
2	PS9 I/O check, sensor check	DFCB PJ14-8 (ON)	DF-618 B-6
3	PS8 I/O check, sensor check	DFCB PJ12-2 (ON)	DF-618 I-3
4	M5 operation check	DFCB PJ6-10 to 11	DF-618 I-7
5	Change DFCB	—	—

17.3.15 ADF paper feed section

Relevant parts	
Take-up motor (M2) After separate sensor (PS4) Length sensor/1 (PS10) Length sensor/2 (PS11) Length sensor/3 (PS12)	DF control board (DFCB)

Step	Action	WIRING DIAGRAM	
		Control signal	Location (Electrical component)
1	Initial check items	—	—
2	PS4 I/O check, sensor check	DFCB PJ11-5 (ON)	DF-618 B-5
3	PS10 I/O check, sensor check	REYB PJ5-12 (ON)	DF-618 K to L-8
4	PS11 I/O check, sensor check	REYB PJ5-8 (ON)	DF-618 K to L-9
5	PS12 I/O check, sensor check	REYB PJ5-6 (ON)	DF-618 K to L-9
6	M2 operation check	DFCB PJ8-5 to 10	DF-618 I-6
7	Change DFCB	—	—

17.3.16 ADF transport section

Relevant parts	
Registration motor (M7) Take-up motor (M2) Registration sensor (PS3) After separate sensor (PS4) Before read sensor (PS9)	DF control board (DFCB)

Step	Action	WIRING DIAGRAM	
		Control signal	Location (Electrical component)
1	Initial check items	—	—
2	Adjust the height of the guide support for the original glass moving unit. See P.646	—	—
3	PS3 I/O check, sensor check	DFCB PJ10-11 (ON)	DF-618 B-3
4	PS4 I/O check, sensor check	DFCB PJ11-5 (ON)	DF-618 B-5
5	PS9 I/O check, sensor check	DFCB PJ14-8 (ON)	DF-618 B-6
6	M7 operation check	DFCB PJ9-5 to 8	DF-618 I-5
7	M2 operation check	DFCB PJ8-5 to 10	DF-618 I-6
8	Change DFCB	—	—

17.3.17 ADF paper exit section

Relevant parts	
Exit motor (M3) Before read sensor (PS9) Exit sensor (PS5)	DF control board (DFCB)

Step	Action	WIRING DIAGRAM	
		Control signal	Location (Electrical component)
1	Initial check items	—	—
2	PS9 I/O check, sensor check	DFCB PJ14-8 (ON)	DF-618 B-6
3	PS5 I/O check, sensor check	DFCB PJ13-3 (ON)	DF-618 I-5
4	M3 operation check	DFCB PJ8-1 to 4	DF-618 I-7
5	Change LUDB	—	—

17.3.18 ADF image reading section

Relevant parts	
Reading motor (M1) Reading roller pressure/retraction motor (M4) Registration sensor (PS3) Reverse registration sensor (PS8) Before read sensor (PS9)	DF control board (DFCB)

Step	Action	WIRING DIAGRAM	
		Control signal	Location (Electrical component)
1	Initial check items	—	—
2	Make the adjustment of original stop position. See P.585	—	—
3	PS3 I/O check, sensor check	DFCB PJ10-11 (ON)	DF-618 B-3
4	PS8 I/O check, sensor check	DFCB PJ12-2 (ON)	DF-618 I-3
5	PS9 I/O check, sensor check	DFCB PJ14-8 (ON)	DF-618 B-6
6	M1 operation check	DFCB PJ9-1 to 4	DF-618 I-6
7	M4 operation check	DFCB PJ6-5 to 6	DF-618 I-4
8	Change LUDB	—	—

17.3.19 Code: 72-11

Relevant parts	
FNS pass sensor (PS1) Z-fold Punch regist sensor (PS2)	FS control board (FSCB)

Step	Action	WIRING DIAGRAM	
		Control signal	Location (Electrical component)
1	Initial check items	—	—
2	PS1 I/O check, sensor check	FSCB CN10-2 (ON)	FS-526 D-8
3	PS2 I/O check, sensor check	FSCB CN10-5 (ON)	FS-526 D-8
4	Change FSCB	—	—

17.3.20 Code: 72-13

Relevant parts	
Z-fold Punch regist sensor (PS2)	FS control board (FSCB)

Step	Action	WIRING DIAGRAM	
		Control signal	Location (Electrical component)
1	Initial check items	—	—
2	PS2 I/O check, sensor check	FSCB CN10-5 (ON)	FS-526 D-8
3	Change FSCB	—	—

17.3.21 Code: 72-14

(1) When FS-526 is installed

Relevant parts	
FNS pass sensor (PS1) Center staple pass sensor (PS12)	FS control board (FSCB)

Step	Action	WIRING DIAGRAM	
		Control signal	Location (Electrical component)
1	Initial check items	—	—
2	PS1 I/O check, sensor check	FSCB CN10-2 (ON)	FS-526 D-8
3	PS12 I/O check, sensor check	FSCB CN10-8 (ON)	FS-526 D-8 to 9
4	Change FSCB	—	—

⚠1 (2) When FS-527 is installed

Relevant parts	
Lower path sensor (PS9) Saddle path sensor (PS11)	FS control board (FSCB)

Step	Action	WIRING DIAGRAM	
		Control signal	Location (Electrical component)
1	Initial check items	—	—
2	PS9 I/O check, sensor check	FSCB PJ16-5 (ON)	FS-527 J-4
3	PS11 I/O check, sensor check	FSCB PJ13-6 (ON)	FS-527 B to C-5
4	Change FSCB	—	—

17.3.22 Code: 72-15

(1) When FS-526 is installed

Relevant parts	
Center staple pass sensor (PS12)	FS control board (FSCB)

Step	Action	WIRING DIAGRAM	
		Control signal	Location (Electrical component)
1	Initial check items	—	—
2	PS12 I/O check, sensor check	FSCB CN10-8 (ON)	FS-526 D-8 to 9
3	Change FSCB	—	—

⚠1 (2) When FS-527 is installed

Relevant parts	
Saddle path sensor (PS11)	FS control board (FSCB)

Step	Action	WIRING DIAGRAM	
		Control signal	Location (Electrical component)
1	Initial check items	—	—
2	PS11 I/O check, sensor check	FSCB PJ13-6 (ON)	FS-527 B to C-5
3	Change FSCB	—	—

17.3.23 Code: 72-16

(1) When FS-526 is installed

Relevant parts	
Paper exit sensor (PS39) FNS pass sensor (PS1)	FS control board (FSCB)

Step	Action	WIRING DIAGRAM	
		Control signal	Location (Electrical component)
1	Initial check items	—	—
2	PS39 I/O check, sensor check	PFTDB CN4-12 (ON)	bizhub C652/ 552/C452 Q-5
3	PS1 I/O check, sensor check	FSCB CN10-2 (ON)	FS-526 D-8
4	Change FSCB	—	—

(2) When FS-527 is installed

Relevant parts	
Paper exit sensor (PS39) Paper passage sensor/1 (PS1)	FS control board (FSCB)

Step	Action	WIRING DIAGRAM	
		Control signal	Location (Electrical component)
1	Initial check items	—	—
2	PS39 I/O check, sensor check	PFTDB CN4-12 (ON)	bizhub C652/ 552/C452 Q-5
3	PS1 I/O check, sensor check	FSCB PJ11-2 (ON)	FS-527 I-11 to 12
4	Change FSCB	—	—

17.3.24 Code: 72-17

(1) When FS-526 is installed

Relevant parts	
FNS pass sensor (PS1) Sub tray exit sensor (PS8)	FS control board (FSCB)

Step	Action	WIRING DIAGRAM	
		Control signal	Location (Electrical component)
1	Initial check items	—	—
2	PS1 I/O check, sensor check	FSCB CN10-2 (ON)	FS-526 D-8
3	PS8 I/O check, sensor check	FSCB CN21<B>-3 (ON)	FS-526 L-8
4	Change FSCB	—	—

(2) When FS-527 is installed

Relevant parts	
Paper passage sensor/1 (PS1) Paper passage sensor/2 (PS2)	FS control board (FSCB)

Step	Action	WIRING DIAGRAM	
		Control signal	Location (Electrical component)
1	Initial check items	—	—
2	PS1 I/O check, sensor check	FSCB PJ11-2 (ON)	FS-527 I-11 to 12
3	PS2 I/O check, sensor check	FSCB PJ11-8 (ON)	FS-527 I-11
4	Change FSCB	—	—

17.3.25 Code: 72-18

(1) When FS-526 is installed

Relevant parts	
Z-fold Punch regist sensor (PS2) 2 staples stacker sensor (PS3)	FS control board (FSCB)

Step	Action	WIRING DIAGRAM	
		Control signal	Location (Electrical component)
1	Initial check items	—	—
2	PS2 I/O check, sensor check	FSCB CN10-5 (ON)	FS-526 D-8
3	PS3 I/O check, sensor check	FSCB CN17-9 (ON)	FS-526 L-7
4	Change FSCB	—	—

(2) When FS-527 is installed

Relevant parts	
Paper passage sensor/2 (PS2) Registration sensor (PS10)	FS control board (FSCB)

Step	Action	WIRING DIAGRAM	
		Control signal	Location (Electrical component)
1	Initial check items	—	—
2	PS2 I/O check, sensor check	FSCB PJ11-8 (ON)	FS-527 I-11
3	PS10 I/O check, sensor check	FSCB PJ13-8 (ON)	FS-527 B to C-5
4	Change FSCB	—	—

17.3.26 Code: 72-19

(1) When FS-526 is installed

Relevant parts	
Stacker entrance motor (M10) 2 staples stacker sensor (PS3)	FS control board (FSCB)

Step	Action	WIRING DIAGRAM	
		Control signal	Location (Electrical component)
1	Initial check items	—	—
2	PS3 I/O check, sensor check	FSCB CN17-9 (ON)	FS-526 L-7
3	M10 operation check	FSCB CN12-7 to 12	FS-526 D-4 to 5
4	Change FSCB	—	—

(2) When FS-527 is installed

Relevant parts	
Conveyance motor (M4) Upper path sensor (PS8) Lower path sensor (PS9) Registration sensor (PS10)	FS control board (FSCB)

Step	Action	WIRING DIAGRAM	
		Control signal	Location (Electrical component)
1	Initial check items	—	—
2	PS8 I/O check, sensor check	FSCB PJ14-12 (ON)	FS-527 J-5
3	PS9 I/O check, sensor check	FSCB PJ16-5 (ON)	FS-527 J-4
4	PS10 I/O check, sensor check	FSCB PJ13-8 (ON)	FS-527 B to C-5
5	M4 operation check	FSCB PJ10-5 to 8	FS-527 B to C-3
6	Change FSCB	—	—

17.3.27 Code: 72-21

(1) When FS-526 is installed

Relevant parts	
2 staples stacker empty sensor (PS15)	FS control board (FSCB)

Step	Action	WIRING DIAGRAM	
		Control signal	Location (Electrical component)
1	Initial check items	—	—
2	PS15 I/O check, sensor check	FSCB CN21<B>-5 (ON)	FS-526 L-9
3	Change FSCB	—	—

(2) When FS-527 is installed

Relevant parts	
lower path sensor (PS9) Tray1 paper detection sensor (PS16)	FS control board (FSCB)

Step	Action	WIRING DIAGRAM	
		Control signal	Location (Electrical component)
1	Initial check items	—	—
2	PS9 I/O check, sensor check	FSCB PJ16-5 (ON)	FS-527 J-4
3	PS16 I/O check, sensor check	FSCB PJ17-8 (ON)	FS-527 B to C-8
4	Change FSCB	—	—

17.3.28 Code: 72-22

(1) When FS-526 is installed

Relevant parts	
Z-fold Punch regist sensor (PS2) Sub tray exit sensor (PS8)	FS control board (FSCB)

Step	Action	WIRING DIAGRAM	
		Control signal	Location (Electrical component)
1	Initial check items	—	—
2	PS2 I/O check, sensor check	FSCB CN10-5 (ON)	FS-526 D-8
3	PS8 I/O check, sensor check	FSCB CN21<B>-3 (ON)	FS-526 L-8
4	Change LUDB	—	—

(2) When FS-527 is installed

Relevant parts	
Registration sensor (PS10) Tray2 path sensor (PS6)	FS control board (FSCB)

Step	Action	WIRING DIAGRAM	
		Control signal	Location (Electrical component)
1	Initial check items	—	—
2	PS10 I/O check, sensor check	FSCB PJ13-8 (ON)	FS-527 B to C-5
3	PS6 I/O check, sensor check	FSCB PJ14-9 (ON)	FS-527 J-5
4	Change FSCB	—	—

17.3.29 Code: 72-23

Relevant parts	
Sub tray exit sensor (PS8)	FS control board (FSCB)

Step	Action	WIRING DIAGRAM	
		Control signal	Location (Electrical component)
1	Initial check items	—	—
2	PS8 I/O check, sensor check	FSCB CN21<B>-3 (ON)	FS-526 L-8
3	Change FSCB	—	—

17.3.30 Code: 72-25 / 72-26

(1) When FS-526+SD-508 is installed

Relevant parts	
Exit motor (M34) Fold sensor (PS27)	SD drive board (SDDB) FS control board (FSCB)

Step	Action	WIRING DIAGRAM	
		Control signal	Location (Electrical component)
1	Initial check items	—	—
2	PS27 I/O check, sensor check	SDDB CN406<A>-14 (ON)	SD-508 K-9
3	M34 operation check	FSCB CN42-1 to 12	SD-508 G-3 to 4
4	Change SDDB	—	—
5	Change FSCB	—	—

⚠1 (2) When FS-527+SD-509 is installed

Relevant parts	
Paper detection sensor/2 (PS44)	SD drive board (SDDB) FS control board (FSCB)

Step	Action	WIRING DIAGRAM	
		Control signal	Location (Electrical component)
1	Initial check items	—	—
2	PS44 I/O check, sensor check	SDDB PJ13-2 (ON)	SD-509 G-3
3	Change SDDB	—	—
4	Change FSCB	—	—

⚠1 17.3.31 Code: 72-31 / 72-34

Relevant parts	
Job tray paper exit sensor (PS402)	FS control board (FSCB)

Step	Action	WIRING DIAGRAM	
		Control signal	Location (Electrical component)
1	Initial check items	—	—
2	PS402 I/O check, sensor check	FSCB CN50-6 (ON)	FS-526 C-16
3	Change FSCB	—	—

⚠1 17.3.32 Code: 72-35

Relevant parts	
Transfer clutch /Lw (CL202) Paper entrance sensor /Lw (PS206)	PI drive board (PIDB) FS control board (FSCB)

Step	Action	WIRING DIAGRAM	
		Control signal	Location (Electrical component)
1	Initial check items	—	—
2	PS206 I/O check, sensor check	PIDB CN53<A>-5 (ON)	PI-505 C to D-5
3	CL202 operation check	PIDB CN56-1 (ON)	PI-505 C to D-7
4	Change PIDB	—	—
5	Change FSCB	—	—

⚠1 17.3.33 Code: 72-38

Relevant parts	
Paper pass sensor (PS202)	Paper size detect board (PSDTB) Transport control board (TRCB) ZU control board (ZUCB)

Step	Action	WIRING DIAGRAM	
		Control signal	Location (Electrical component)
1	Initial check items	—	—
2	PS202 I/O check, sensor check	TRCB CN206-2 (ON)	FS-526 Q-2 to 3
3	PSDTB I/O check, sensor check	ZUCB CN2-1 to 10	ZU-606 C to D-9 to 10
4	Change TRCB	—	—
5	Change ZUCB	—	—

17.3.34 Code: 72-39

Relevant parts	
Paper size detect board (PSDTB)	ZU control board (ZUCB)

Step	Action	WIRING DIAGRAM	
		Control signal	Location (Electrical component)
1	Initial check items	—	—
2	PSDTB I/O check, sensor check	ZUCB CN2-1 to 10	ZU-606 C to D-9 to 10
3	Change ZUCB	—	—

17.3.35 Code: 72-40

Relevant parts	
Paper size detect board (PSDTB) Conveyance sensor (PS601)	ZU control board (ZUCB)

Step	Action	WIRING DIAGRAM	
		Control signal	Location (Electrical component)
1	Initial check items	—	—
2	PSDTB I/O check, sensor check	ZUCB CN2-1 to 10	ZU-606 C to D-9 to 10
3	PS601 I/O check, sensor check	ZUCB CN4-2 (ON)	ZU-606 C-4
4	Change ZUCB	—	—

17.3.36 Code: 72-41 / 72-42

Relevant parts	
Conveyance sensor (PS601)	ZU control board (ZUCB)

Step	Action	WIRING DIAGRAM	
		Control signal	Location (Electrical component)
1	Initial check items	—	—
2	PS601 I/O check, sensor check	ZUCB CN4-2 (ON)	ZU-606 C-4
3	Change ZUCB	—	—

17.3.37 Code: 72-43

(1) When FS-526+PK-516 is installed

Relevant parts	
Punch drive motor (M301) PK punch home sensor (PS301)	Punch control board (PKDB) FS control board (FSCB)

Step	Action	WIRING DIAGRAM	
		Control signal	Location (Electrical component)
1	Initial check items	—	—
2	PS301 I/O check, sensor check	PKDB CN36-5 (ON)	PK-516 C-3
3	M301 operation check	PKDB CN35-1 to 3	PK-516 C-2
4	Change PKDB	—	—
5	Change FSCB	—	—

⚠1 (2) When FS-527+PK-517 is installed

Relevant parts	
Punch motor/1 (M100) Punch home sensor/1 (PS100)	FS control board (FSCB)

Step	Action	WIRING DIAGRAM	
		Control signal	Location (Electrical component)
1	Initial check items	—	—
2	PS100 I/O check, sensor check	FSCB PJ19-8 (ON)	FS-527 (PK-517) J-9
3	M100 operation check	FSCB PJ19-1 (CW) FSCB PJ19-3 (CCW)	FS-527 (PK-517) J-8
4	Change FSCB	—	—

⚠1 17.3.38 Code: 72-44

Relevant parts	
Exit sensor (PS609)	Paper size detect board (PSDTB) ZU control board (ZUCB)

Step	Action	WIRING DIAGRAM	
		Control signal	Location (Electrical component)
1	Initial check items	—	—
2	PS609 I/O check, sensor check	ZUCB CN4-8 (ON)	ZU-606 C-5
3	PSDTB I/O check, sensor check	ZUCB CN2-1 to 10	ZU-606 C to D-9 to 10
4	Change ZUCB	—	—

17.3.39 Code: 72-45

Relevant parts	
Paper pass sensor (PS202) Exit sensor (PS609)	ZU control board (ZUCB)

Step	Action	WIRING DIAGRAM	
		Control signal	Location (Electrical component)
1	Initial check items	—	—
2	PS202 I/O check, sensor check	TRCB CN206-2 (ON)	FS-526 Q-2 to 3
3	PS609 I/O check, sensor check	ZUCB CN4-8 (ON)	ZU-606 C-5
4	Change ZUCB	—	—

17.3.40 Code: 72-46

Relevant parts	
Exit sensor (PS609)	ZU control board (ZUCB)

Step	Action	WIRING DIAGRAM	
		Control signal	Location (Electrical component)
1	Initial check items	—	—
2	PS609 I/O check, sensor check	ZUCB CN4-8 (ON)	ZU-606 C-5
3	Change ZUCB	—	—

17.3.41 Code: 72-47

Relevant parts	
ZU control board (ZUCB)	

Step	Action	WIRING DIAGRAM	
		Control signal	Location (Electrical component)
1	Initial check items	—	—
2	Change ZUCB	—	—

⚠1 17.3.42 Code: 72-49

Relevant parts	
Transfer clutch /Up (CL201) Paper entrance sensor /Up (PS201)	PI drive board (PIDB) FS control board (FSCB)

Step	Action	WIRING DIAGRAM	
		Control signal	Location (Electrical component)
1	Initial check items	—	—
2	PS201 I/O check, sensor check	PIDB CN53<A>-2 (ON)	PI-505 C to D-8
3	CL201 operation check	PIDB CN54-3 (ON)	PI-505 C to D-4
4	Change PIDB	—	—
5	Change FSCB	—	—

⚠1 17.3.43 Code: 72-50

Relevant parts	
Paper entrance sensor /Up (PS201) FNS pass sensor (PS1)	PI drive board (PIDB) FS control board (FSCB)

Step	Action	WIRING DIAGRAM	
		Control signal	Location (Electrical component)
1	Initial check items	—	—
2	PS201 I/O check, sensor check	PIDB CN53<A>-2 (ON)	PI-505 C to D-8
3	PS1 I/O check, sensor check	FSCB CN10-2 (ON)	FS-526 D-8
4	Change PIDB	—	—
5	Change FSCB	—	—

⚠1 17.3.44 Code: 72-51

Relevant parts	
Paper entrance sensor /Lw (PS206) FNS pass sensor (PS1)	PI drive board (PIDB) FS control board (FSCB)

Step	Action	WIRING DIAGRAM	
		Control signal	Location (Electrical component)
1	Initial check items	—	—
2	PS206 I/O check, sensor check	PIDB CN53<A>-5 (ON)	PI-505 C to D-5
3	PS1 I/O check, sensor check	FSCB CN10-2 (ON)	FS-526 D-8
4	Change PIDB	—	—
5	Change FSCB	—	—

17.3.45 Code: 72-60

Relevant parts	
Punch clutch (CL601) Punch home sensor (PS606)	Paper size detect board (PSDTB) ZU control board (ZUCB)

Step	Action	WIRING DIAGRAM	
		Control signal	Location (Electrical component)
1	Initial check items	—	—
2	PS606 I/O check, sensor check	ZUCB CN3-5 (ON)	ZU-606 C-7
3	CL601 operation check	ZUCB CN11-4	ZU-606 C-7
4	PSDTB I/O check, sensor check	ZUCB CN2-1 to 10	ZU-606 C to D-9 to 10
5	Change ZUCB	—	—

17.3.46 Code: 72-61

Relevant parts	
Conveyance sensor (PS601)	Paper size detect board (PSDTB) ZU control board (ZUCB)

Step	Action	WIRING DIAGRAM	
		Control signal	Location (Electrical component)
1	Initial check items	—	—
2	PS601 I/O check, sensor check	ZUCB CN4-2 (ON)	ZU-606 C-4
3	PSDTB I/O check, sensor check	ZUCB CN2-1 to 10	ZU-606 C to D-9 to 10
4	Change ZUCB	—	—

17.3.47 Code: 72-62

Relevant parts	
Conveyance sensor (PS601) Exit sensor (PS609)	ZU control board (ZUCB)

Step	Action	WIRING DIAGRAM	
		Control signal	Location (Electrical component)
1	Initial check items	—	—
2	PS601 I/O check, sensor check	ZUCB CN4-2 (ON)	ZU-606 C-4
3	PS609 I/O check, sensor check	ZUCB CN4-8 (ON)	ZU-606 C-5
4	Change ZUCB	—	—

17.3.48 Code: 72-64

Relevant parts	
Main motor (M606) Conveyance encoder sensor (PS610)	ZU control board (ZUCB)

Step	Action	WIRING DIAGRAM	
		Control signal	Location (Electrical component)
1	Initial check items	—	—
2	M606 operation check	ZUCB CN8-1 to 6	ZU-606 C-2
3	PS610 I/O check, sensor check	ZUCB CN4-14 (ON)	ZU-606 C-5
4	Change ZUCB	—	—

17.3.49 Code: 72-81

(1) When FS-526 is installed

Relevant parts	
Stapler position sensor/4 (PS53)	FS control board (FSCB)

Step	Action	WIRING DIAGRAM	
		Control signal	Location (Electrical component)
1	Initial check items	—	—
2	PS53 I/O check, sensor check	FSCB CN20<B>-12 (ON)	FS-526 L-14
3	Change FSCB	—	—

(2) When FS-527 is installed

Relevant parts	
Stapler unit	FS control board (FSCB)

Step	Action	WIRING DIAGRAM	
		Control signal	Location (Electrical component)
1	Initial check items	—	—
2	Change stapler unit	—	—
3	Change FSCB	—	—

17.3.50 Code: 72-84

Relevant parts	
Center staple motor (M23) Stapler home sensor (PS33)	SD drive board (SDDB) FS control board (FSCB)

Step	Action	WIRING DIAGRAM	
		Control signal	Location (Electrical component)
1	Initial check items	—	—
2	PS33 I/O check, sensor check	SDDB CN403-17 (ON)	SD-508 C-10
3	M23 operation check	SDDB CN406<A>-1 to 4 (ON)	SD-508 K-8
4	Change SDDB	—	—
5	Change FSCB	—	—

17.3.51 Code: 72-85

(1) When FS-526+SD-508 is installed

Relevant parts	
Stapler home sensor (PS33)	SD drive board (SDDB) FS control board (FSCB)

Step	Action	WIRING DIAGRAM	
		Control signal	Location (Electrical component)
1	Initial check items	—	—
2	PS33 I/O check, sensor check	SDDB CN403-17 (ON)	SD-508 C-10
3	Change SDDB	—	—
4	Change FSCB	—	—

(2) When FS-527+SD-509 is installed

Relevant parts	
Saddle stapler unit	SD drive board (SDDB) FS control board (FSCB)

Step	Action	WIRING DIAGRAM	
		Control signal	Location (Electrical component)
1	Initial check items	—	—
2	Change saddle stapler unit	—	—
3	Change SDDB	—	—
4	Change FSCB	—	—

⚠1 17.3.52 Code: 72-86

Relevant parts	
Saddle path sensor (PS11) Paper detection sensor/1 (PS43)	SD drive board (SDDB) FS control board (FSCB)

Step	Action	WIRING DIAGRAM	
		Control signal	Location (Electrical component)
1	Initial check items	—	—
2	PS11 I/O check, sensor check	FSCB PJ13-6 (ON)	FS-527 B to C-5
3	PS43 I/O check, sensor check	SDDB PJ9-8 (ON)	SD-509 G-1
4	Change SDDB	—	—
5	Change FSCB	—	—

⚠1 17.3.53 Code: 72-87

Relevant parts	
Saddle path sensor (PS11) Paper detection sensor/2 (PS44)	SD drive board (SDDB) FS control board (FSCB)

Step	Action	WIRING DIAGRAM	
		Control signal	Location (Electrical component)
1	Initial check items	—	—
2	PS11 I/O check, sensor check	FSCB PJ13-6 (ON)	FS-527 B to C-5
3	PS44 I/O check, sensor check	SDDB PJ13-2 (ON)	SD-509 G-3
4	Change SDDB	—	—
5	Change FSCB	—	—

17.3.54 Code: 72-90

Relevant parts	
FS control board (FSCB)	

Step	Action	WIRING DIAGRAM	
		Control signal	Location (Electrical component)
1	Initial check items	—	—
2	Change FSCB	—	—

17.3.55 Code: 75-42

Relevant parts	
Paper exit sensor (PS39) Paper pass sensor (PS202)	Transport control board (TRCB) FS control board (FSCB)

Step	Action	WIRING DIAGRAM	
		Control signal	Location (Electrical component)
1	Initial check items	—	—
2	PS39 I/O check, sensor check	PFTDB CN4-12 (ON)	bizhub C652/552 Q-5
3	PS202 I/O check, sensor check	TRCB CN206-2 (ON)	FS-526 P to Q-2
4	Change TRCB	—	—
5	Change FSCB	—	—

17.3.56 Code: 75-43

Relevant parts	
Paper pass sensor (PS202)	Transport control board (TRCB) FS control board (FSCB)

Step	Action	WIRING DIAGRAM	
		Control signal	Location (Electrical component)
1	Initial check items	—	—
2	PS202 I/O check, sensor check	TRCB CN206-2 (ON)	FS-526 P to Q-2
3	Change TRCB	—	—
4	Change FSCB	—	—

17.3.57 Misfeed at duplex pre-registration section

Relevant parts	
ADU transport motor/1 (M31) ADU transport motor/2 (M32) Timing roller sensor (PS38) OHP detection sensor (PS40)	Paper feed/transport drive board (PFTDB) Printer control board (PRCB)

Step	Action	WIRING DIAGRAM	
		Control signal	Location (Electrical component)
1	Initial check items	—	—
2	PS38 I/O check, sensor check	PFTDB CN4-6 (ON)	Q-5
3	PS40 I/O check, sensor check	PFTDB CN4-2 (ON)	Q-4 to 5
4	M32 operation check	PFTDB CN3-10 to 13	Q-8
5	M31 operation check	PFTDB CN3-14 to 17	Q-8
6	Change PFTDB	—	—
7	Change PRCB	—	—

17.3.58 Misfeed at duplex transport section

Relevant parts	
ADU transport motor/1 (M31) ADU transport motor/2 (M32) ADU paper passage sensor/1 (PS47) ADU paper passage sensor/2 (PS48)	Paper feed/transport drive board (PFTDB) Printer control board (PRCB)

Step	Action	WIRING DIAGRAM	
		Control signal	Location (Electrical component)
1	Initial check items	—	—
2	PS47 I/O check, sensor check	PFTDB CN3-3 (ON)	Q-7
3	PS48 I/O check, sensor check	PFTDB CN3-6 (ON)	Q-7
4	M31 operation check	PFTDB CN3-14 to 17	Q-8
5	M32 operation check	PFTDB CN3-10 to 13	Q-8
6	Change PFTDB	—	—
7	Change PRCB	—	—

18. MALFUNCTION CODE

18.1 Display procedure

- The machine's CPU performs a self-diagnostics function that, on detecting a malfunction, gives the corresponding warning code and maintenance call mark on the control panel.
- Touching the maintenance call mark will display the corresponding warning code on the state confirm screen.

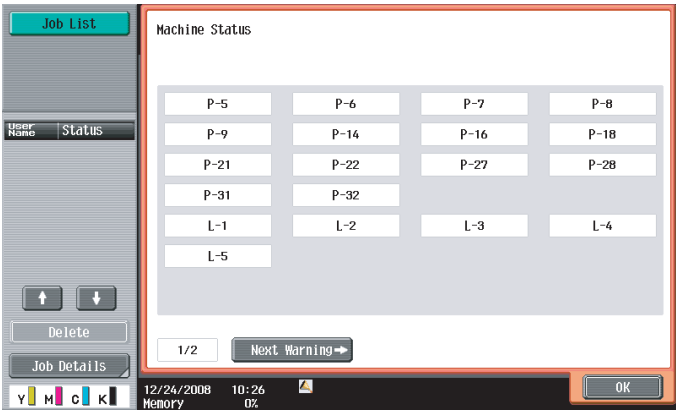

A0P0F4E513DA

18.2 List

- If an image stabilization or scanner fault occurs, the corresponding warning code appears.

Code	Item	Description
S-1	CCD gain adjustment failure	• It is detected that the CCD clamp gain adjustment value is faulty.
D-1	Split line detect	• While recovering from the power save mode or when the main/sub power switch is ON, it detects whether or not stain exist at the original glass moving unit when the ADF is closed. This warning will be displayed if the original is set to ADF when stain exist. • The thin line detection level and the warning display can be changed by the following setting. [Service Mode] → [System 2] → [Thin line Detect. Setting]
D-2	Read guide trouble	• While recovering from the power save mode or when the main/sub power switch is ON, it detects whether or not stain exist at the scanning guide when the ADF is closed. This warning will be displayed if the original is set to ADF when stain exist. • This setting is valid only when the [Detection during Paper Passing] available from the following setting is set to one between 2 and 6. [Service Mode] → [System 2] → [This Line Detect. Setting]
P-5	IDC sensor (front) failure	• When adjusting the IDC sensor, output voltage detected for all eight sample patterns are 4.3 V or more. • When adjustment is complete, sensor's output voltage with selected light intensity is 1.0 V or under. • During image stabilization (gamma correction control), detected output value for IDC sensor did not go below threshold (half the value of what is detected by IDC sensor on the belt surface) for three consecutive times (position of the pattern end is not detected). • During image stabilization (gamma correction control), sensor's output value of each color for hyper 0 gradation after the primary approximation is half the detection level on the belt surface or under
P-28	IDC sensor (rear) failure	
P-6	Cyan imaging unit failure	• All density readings taken from the density pattern produced on the transfer belt are 1.0 g/m^2 (IDC sensor photo receiver output) or less during max. density adjustment (Vg/Vdc adjustment).
P-7	Magenta imaging unit failure	
P-8	Yellow imaging unit failure	
P-9	Black imaging unit failure	
P-14	Skew correction trouble	• The difference between the skew default position setting value and the cumulative amount of skew adjustment values goes over the predetermined value.
P-16	PC charge cleaning trouble 1	• Charging cleaner home sensor is not transmitted even after the specified time has passed while the wire cleaning material is moving forward.

Code	Item	Description
P-18	PC charge cleaning trouble 1	• Charging cleaner return sensor is not interrupted even after the specified time has passed when the wire cleaning material is moving forward. * Under the situation above occurs, control will be switched to the return operation after the warning is given. When the charging cleaner home sensor is not interrupted after the specified time has passed during the return operation, trouble code C-2101 will be given.
P-21	Color regist test pattern failure	• The number of points detected in the main scan direction is more or less than the specified value during main scan direction registration correction. • The number of points detected in the sub scan direction is more or less than the specified value during sub scan direction registration correction.
P-22	Color regist adjust failure	• The color shift amount is greater than the specified range during main scan direction registration correction. • The color shift amount is greater than the specified range during sub scan direction registration correction. • On the color shift test pattern, the maximum and minimum deviations detected in the main and sub scan directions go over the predetermined value.
P-27	Secondary transfer ATVC failure	• An abnormal average value is detected during an adjustment of the second image transfer ATVC value.
P-31	K PC encoder sensor malfunction	• While the K PC drum motor is rotating at a stable pace and lock signals are in an active (LOW=0) condition, an abnormal encoder pulse width continues to be detected over the predetermined period of time.
P-32	Heating roller temperature sensor/1 temperature detection failure	• During warm up, the temperature detected by the heating roller temperature sensor/1 exceeded the warm up complete temperature of the heating roller for over the predetermined value, and stayed for a predetermined period of time. • When the predetermined period of time had passed after the warm up became complete, detected temperature of the heating roller thermistor/1 exceeded the temperature detected by the heating roller temperature sensor/1 for over the predetermined value for more than the predetermined period of time. • While printing, temperature detected by the heating roller thermistor/1 exceeded the temperature detected by the heating roller temperature sensor/1 for more than the predetermined value for a predetermined period of time. • This warning indicates that condensation dirt on the heating roller temperature sensor/1 was detected, and the alternate temperature control is being conducted. With condensation, the warning is cleared when the condensation is detected to be removed. When the dirt on the sensor is detected, it is considered as a failure and the trouble code C-392A is issued.

Code	Item	Description
L-1	Imaging unit/C accumulated rotation time excess warning	• PC drum rotation time count value used for the life judgment of imaging units (the value for PC drum rotation distance calculated into the rotation time) is above the threshold value for the excess warning (5,180 M). • Printing with this warning being displayed is not included in the image warranty.
L-2	Imaging unit/M accumulated rotation time excess warning	
L-3	Imaging unit/Y accumulated rotation time excess warning	
L-4	Drum unit/K accumulated rotation time excess warning	• Count value for PC drum rotation time used for judging drum unit/K life (the value for PC drum rotation distance calculated into the rotation time) is above threshold value for the excess warning (8,958 M). • Printing with this warning being displayed is not included in the image warranty.
L-5	Transfer belt unit accumulated rotation time excess warning	• Count value for the transfer belt rotation time used for judging the transfer belt unit life is above the threshold value for excess warning (27,777 M). • Printing with this warning being displayed is not included in the image warranty.

18.3 Solution

18.3.1 S-1: CCD gain adjustment failure

Relevant parts	
Exposure unit	CCD board (CCDB) MFP board (MFPB)

Step	Action
1	Correct the harness connection between CCDB and MFPB if faulty.
2	Check for possible extraneous light and correct as necessary.
3	Clean the lens, mirrors, CCD surface, and shading sheet if dirty.
4	Correct reflective mirror of the scanner if faulty, or change scanner.
5	Change CCD sensor unit.
6	Change MFPB.

18.3.2 D-1: Split line detect

Relevant parts	
Original glass moving unit	Original glass position control board (OGPCB) Printer control board (PRCB)

Step	Action
1	Wipe clean the glass surface of the original glass moving unit.
2	Correct the harness connection between OGPCB and PRCB if faulty.
3	Change original glass moving unit.
4	Change OGPCB.
5	Change PRCB.

18.3.3 D-2: ADF read guide trouble

Relevant parts	
ADF scanning guide	

Step	Action
1	Wipe clean the surface of the ADF scanning guide with a soft cloth, if it is dirty. See P.12 of the DF-618/SP-501 service manual.

18.3.4 P-5: IDC sensor (front) failure

18.3.5 P-28 IDC sensor (rear) failure

Relevant parts	
IDC registration sensor/F (IDCS/F) IDC registration sensor/R (IDCS/R)	Printer control board (PRCB) High voltage unit/1 (HV1) Transfer belt unit

Step	Action
1	Wipe clean the surface of the transfer belt with a soft cloth, if it is dirty.
2	Change the image transfer belt unit if the transfer belt is damaged.
3	Reinstall or reconnect IDCS/F or IDCS/R, sensor shutter or connector, if it is installed or connected improperly.
4	Clean IDCS/For IDCS/R if it is dirty.
5	Check the HV1 connector for proper connection and correct as necessary.
6	Open/close the front door, run an image stabilization sequence, and select [State Confirmation] → [Level History 1] to check the IDC value. IDC1: IDCS/F, IDC2: IDCS/R If the value is 1.0 V or less, change IDCS/F or IDCS/R.
⚠1 7	PRCB ICP17 conduction check
8	Change PRCB.

18.3.6 P-6: Cyan imaging unit failure

18.3.7 P-7: Magenta imaging unit failure

18.3.8 P-8: Yellow imaging unit failure

18.3.9 P-9: Black imaging unit failure

Relevant parts	
Imaging unit /C Imaging unit /M Imaging unit /Y Drum unit /K	Transfer belt unit High voltage unit/1 (HV1) Printer control board (PRCB)

Step	Action
1	Select [Imaging Process Adjustment] → [D Max Density] and, if the setting value is negative, readjust.
2	Check the drive transmission portion of the Imaging Unit and correct as necessary.
3	Clean the IDC/registration sensor/F (IDCS/F) or IDC/registration sensor/R (IDCS/R) window if dirty.
4	Clean the contact of the imaging unit connector if dirty.
5	Check the HV1 connector for proper connection and correct as necessary.
6	Change imaging unit.
7	Change the transfer belt unit.
⚠1 8	HV1 IP101, IP201, IP301 or IP401 conduction check
⚠1 9	Change HV1.
10	Change PRCB.

18.3.10 P-14: Skew correction trouble

Relevant parts	
IDC registration sensor/F (IDCS/F) IDC registration sensor/R (IDCS/R) Imaging unit	PH relay board (REYB/PH) Printer control board (PRCB) PH unit

Step	Action
1	Check the drive transmission portion of the Imaging Unit and correct as necessary.
2	Clean the contact of the imaging unit connector if dirty.
3	Reinstall or reconnect IDCS/F or IDCS/R, sensor shutter or connector, if it is installed or connected improperly.
4	Clean IDCS/For IDCS/R if it is dirty.
5	Change IDCS/F or IDCS/R.
6	Change imaging unit.
7	Change PH unit.
1 8	REYB/PH ICP3, ICP4 or ICP5 conduction check
9	Change REYB/PH.
1 10	PRCB ICP17 conduction check
9	Change PRCB.

NOTE

- **After the PH unit is replaced, reset the skew default position for each color. Touch keys as follows for this setting.**
  [Service Mode] → [Machine] → [Skew adjustment] → [Skew adjustment]
  See P.477
- **When this alert code is displayed, according to the list, take actions to address the problem. After the problem is resolved, select [Service Mode] → [Machine] → [Skew adjustment] → [Skew adjustment reset] and perform the skew adjustment reset.**
  See P.477

18.3.11 P-16: PC charge cleaning trouble 1

18.3.12 P-18: PC charge cleaning trouble 2

Relevant parts	
Drum unit /K Charge cleaning motor/K (M15) Charging cleaner home sensor (PS43) Charging cleaner return sensor (PS44)	Printer control board (PRCB)

Step	Action
1	PS43 I/O check, sensor check.
2	PS44 I/O check, sensor check.
3	M15 operation check.
4	Change drum unit /K.
5	Change M15.
6	Change PRCB.

18.3.13 P-21: Color regist test pattern failure

Relevant parts	
Transfer belt unit PH unit	Printer control board (PRCB)

Step	Action
1	Wipe clean the surface of the transfer belt with a soft cloth, if it is dirty.
2	Change the image transfer belt unit if the transfer belt is damaged.
3	Change the PH unit.
4	Change PRCB.

18.3.14 P-22: Color regist adjust failure

Relevant parts	
IDC/registration sensor /F (IDCS/F) IDC/registration sensor/R (IDCS/R)	Printer control board (PRCB)

Step	Action
1	Slide out the imaging unit and reinstall it in position.
2	Reinstall or reconnect IDCS/F or IDCS/R if it is installed or connected improperly.
3	Check the vertical transport guide for installed position and correct as necessary.
4	Change PRCB.

18.3.15 P-27: Secondary transfer ATVC failure

Relevant parts	
High voltage unit/2 (HV2) Printer control board (PRCB)	Image transfer entrance guide 2nd image transfer assy Transfer belt unit

Step	Action
1	Check roller opposed to the 2nd image transfer roller is grounded. Clean the joint or correct if necessary.
2	Check the image transfer entrance guide for proper installation and correct if necessary.
3	Check that the spring does not come off during the pressure operation of the 2nd transfer roller and correct if necessary.
4	Check the contact at the joint of the 2nd image transfer assy and HV2. Clean the joint or correct if necessary.
5	Change the transfer belt unit.
⚠1 6	HV2 IP101 conduction check
7	Change HV2.
8	Change PRCB.

18.3.16 P-31: PC home sensor (K) malfunction

Relevant parts	
K PC encoder sensor/1 (PC45) K PC encoder sensor/2 (PC46)	Transport drive assy Printer control board (PRCB)

Step	Action
1	Perform the faulty sensor check procedure. *1
2	Check the sensor, for which a faulty condition has been checked, for installed position and proper connector connection.
3	Wipe the sensor, for which a faulty condition has been checked, clean of dirt if any.
4	If P-31 persists, change the transport drive assy.
5	Change PRCB.

*1: Faulty sensor check procedure

1. Open the lower front door and turn ON the main power switch of the machine.
2. Call the [Sensor Check] screen to the screen by way of Service Mode.
   For details how to display, see “Adjustment /Setting.”
   See P.552
3. Close the lower front door and start [Stabilizer].
4. During the stabilizer sequence, check to see if the values of the phase detection sensors (K PC encoder sensor/1 and K PC encoder sensor/2) change.
5. A sensor is faulty if its value does not change.

18.3.17 P-32: Heating roller temperature sensor /1 temperature detection failure

Relevant parts	
Fusing unit	Heating roller temperature sensor/1 (TEMS1)

Step	Action
1	Wipe the TEMS1 clean of dirt if any. <Cleaning procedure> • Clear away a dirt or a foreign object on the sensor with a cotton swab. • When a dirt is left even if you cleaned the sensor by above procedure, clear away a dirt or a foreign object on the sensor using a cotton swab dampened with the alcohol. And, wipe off the sensor with a dry cotton swab afterwards.
2	Check the TEMS1 for installed position and proper connector connection.
3	Check the connection of the fusing unit.
4	Change TEMS1.
5	Change fusing unit.

19. TROUBLE CODE

19.1 Display procedure

- The machine's CPU performs a self-diagnostics function that, on detecting a malfunction, gives the corresponding malfunction code on the control panel.

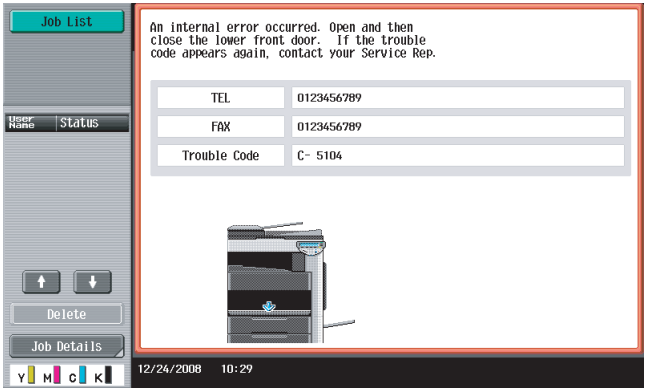

A0P0F4E514DA

19.2 Trouble resetting procedure

- Different malfunction resetting procedures apply depending on the rank of the trouble code.

* List of malfunction resetting procedures

Trouble code rank	Resetting procedures
Rank A	• Trouble reset * Refer to the following procedure.
Rank B	• Opening/closing the lower front door
Rank C	• Turning main power switch OFF/ON

19.2.1 Trouble resetting procedure by Trouble Reset key

A. Use

- If the all troubles occur and the status would not be cleared by turning main power switch OFF and ON again, or opening and closing the lower front door, clear the status of the machine.
- To be used when the status would not be cleared by turning main power switch OFF and ON again, or opening and closing the lower front door in case of a trouble.

B. Procedure

1. Turn OFF the main power switch.
2. Turn main power switch ON while pressing the Utility/Counter key.
3. Touch [Trouble Reset].
4. Check to make sure that [OK] is displayed and the it has been reset.
5. After turning off the main power switch, turn it on again more than 10 seconds after and check if the machine starts correctly.

19.3 Trouble isolation function

- The trouble isolation function enables you to control MFP temporarily isolating faulty units and options where the trouble isolation function can be applied when trouble occurs. This allows you to continue using the other units that are not affected and reduce down time that continues until CE resolves the problem.
- This function can be selected for the following units and options.
  Tray 1, Tray 2, Tray 3, Tray 4, LCT, manual, Half-Fold/Tri-Fold Center Stapling, Punch, Post Inserter, Z fold, Staple, Scanner, ADF

⚠1 • If a problem occurs with the units where the trouble isolation function can be applied, the control panel displays a trouble code and a key with which you decide whether to continue using the MFP. When you press down the key, the control panel displays the units that will be isolated as well as the next confirmation key with which you decide to continue.

⚠1 • When you press down the confirmation key, the message on the control panel asks you to turn OFF and ON the sub power switch. After turning OFF and ON the sub power switch, the MFP starts operating, isolating the faulty units. The message on the control panel also tells that the MFP is working, isolating the faulty units.

⚠1 • To temporarily isolate faulty units and continue using the MFP with the trouble isolation function, be sure to make the above mentioned control panel operation. The faulty units cannot be automatically isolated.

NOTE

- **The malfunction detection mechanism is not applied to units and options that are being isolated.**

19.4 List

Code	Item	Detection timing	Trouble isolation	Rank
C0104	Tray 3/4 feeder transportation motor failure to turn	• The lock signal remains HIGH for a predetermined continuous period of time while the motor remains stationary.	Tray 3/4	B
C0105	Tray 3/4 feeder transportation motor turning at abnormal timing	• The lock signal remains LOW for a predetermined continuous period of time while the motor remains stationary.	—	B
C0202	Tray 1 feeder up/down abnormality	• The tray 1 upper limit sensor is not blocked even after the lapse of a given period of time after the lifting motion has been started.	Tray 1	B
C0204	Tray 2 feeder up/down abnormality	• The tray 2 upper limit sensor is not blocked even after the lapse of a given period of time after the lifting motion has been started.	Tray 2	B
C0206	Tray 3 feeder up/down abnormality	• The tray 3 upper limit sensor is not blocked even after the lapse of a given period of time after the lifting motion has been started.	Tray 3	B
C0208	Tray 4 feeder up/down abnormality	• The tray 4 upper limit sensor is not blocked even after the lapse of a given period of time after the lifting motion has been started.	Tray 4	B
C0216	LCT up/down abnormality	• The Upper limit sensor (PS2) is not blocked even after the set period of time has elapsed after the paper lift-up operation began.	LCT	B

Code	Item	Detection timing	Trouble isolation	Rank
C0301	Suction fan motor's failure to turn	• The fan lock signal remains HIGH for a predetermined continuous period of time while the motor remains stationary.	—	B
C0351	Paper cooling fan trouble	• The fan lock signal remains HIGH for a predetermined continuous period of time while the motor remains stationary.	—	B
C1003	PK communication error	<When FS-526+PK-516 is installed> • When a communication error is detected between the FS control board (FSCB) and the punch control board (PKDB).	—	C
C1004	FNS communication error	• When the FS control board (FSCB) is receiving data, a communication error is detected.	—	C
⚠1 C1005	ZU communication error	• When the ZU control board (ZUCB) is receiving data, a communication error is detected.	—	C
C1080	• Undetectable			
⚠1 C1081	SD communication error	<When FS-527+SD-509 is installed> • When a communication error is detected between the FS control board (FSCB) and the SD drive board (SDDB).	Half-Fold/ Tri-Fold/ Center Stapling	C
C1101	• Undetectable			
C1102	Main tray Up/Down motor malfunction	<When FS-526 is installed> • The main tray top surface sensor (PS4) is turned neither ON nor OFF even after the set period of time has elapsed while the main tray lift motor (M5) is energized. • The staple paper exit top surface sensor (PS7) is turned neither ON nor OFF even after the set period of time has elapsed while the main tray lift motor (M5) is energized.	—	B
C1103	Side-staple front adjust drive motor malfunction	<When FS-526 is installed> • The 2 staples alignment motor home sensor/F (PS17) is not turned ON even after the set period of time has elapsed while the Alignment plate motor/F (M11) is energized.	—	B
C1104	Paper exit roller drive motor malfunction	<When FS-526 is installed> • The exit roller motor (M4) lock signal remains set to H for a set period of time while the exit roller motor (M4) is turning.	—	B
C1105	Paper exit auxiliary roller motor malfunction	<When FS-526 is installed> • The paper output roller home sensor (PS10) is turned neither ON nor OFF even after the set period of time has elapsed after the paper output roller motor (M6) is turned ON.	—	B

Code	Item	Detection timing	Trouble isolation	Rank
C1106	Side-staple stapler drive malfunction	<When FS-526 is installed> • The stapler position sensor/1/2/3/4 (PS50/PS/51/PS52/PS53) is turned neither ON nor OFF even after the set period of time has elapsed after the 2 staples stapler movement motor (M13) is turned ON.	Staple	B
C1107	• Undetectable			
C1108				
C1109	Side-staple stapler motor drive malfunction	<When FS-526 is installed> • The home sensor in the staple unit does not turn ON even after the set period of time has elapsed after the side-staple 2 staples stapler motor (M14) turned ON.	Staple	B
C1110	Center-staple head roller motor malfunction	• The stapler home sensor (PS33) is turned neither ON nor OFF even after the set period of time has elapsed after the staple motor (M24) is turned ON.	Half-Fold/Tri-Fold Center Stapling	B
C1111	• Undetectable			
C1112	Center-staple clinch roller motor malfunction	<When FS-526+SD-508 is installed> • The stapler home sensor (PS33) is not turned ON even after the set period of time has elapsed while the clincher motor (M25) is energized.	Staple, Half-Fold/Tri-Fold Center Stapling	B
C1113	Center-staple lead edge stopper motor malfunction	<When FS-526+SD-508 is installed> • The leading edge stopper home sensor (PS32) is turned neither ON nor OFF even after the set period of time has elapsed after the leading edge stopper motor (M22) is turned ON. <When FS-527+SD-509 is installed> • The leading edge stopper home sensor (PS45) is turned neither ON nor OFF even after the set period of time has elapsed after the leading edge stopper motor (M20) is turned ON.		B
C1114	Center-staple front adjust drive motor malfunction	<When FS-526+SD-508 is installed> • The center staple alignment motor home sensor/F (PS30) is turned neither ON nor OFF even after the set period of time has elapsed after the center staple alignment motor /F (M20) is turned ON. <When FS-527+SD-509 is installed> • The center staple alignment home sensor/F (PS42) is turned neither ON nor OFF even after the set period of time has elapsed after the center staple alignment motor/F (M24) is turned ON.	Half-Fold/Tri-Fold Center Stapling	B

	Code	Item	Detection timing	Trouble isolation	Rank
⚠1	C1115	Center-staple knife drive motor malfunction	<When FS-526+SD-508 is installed> • The center fold knife home sensor (PS34) is not turned ON even after the set period of time has elapsed while the center fold knife motor (M32) is energized. <When FS-527+SD-509 is installed> • The center fold plate home sensor (PS47) is turned neither ON nor OFF even after the set period of time has elapsed after the center fold plate motor (M26) is turned ON.	Half-Fold/ Tri-Fold Center Stapling	B
⚠1	C1116	Center-staple transfer motor malfunction	<When FS-526+SD-508 is installed> • The transport motor (M33) does not reach the specified speed even after the set period of time has elapsed after it starts to operate. <When FS-527+SD-509 is installed> • The center fold roller motor (M25) does not reach the specified speed even after the set period of time has elapsed after it starts to operate.	Half-Fold/ Tri-Fold Center Stapling	B
⚠1	C1124	Sheet feeder up/down drive failure (lower)	<When FS-526+PI-505 is installed> • The tray upper limit sensor /Lw (PS209) or tray lower limit sensor /Lw (PS210) are not turned ON even after the set period of time has elapsed after the tray lift motor /Lw (M202) is energized.	Post Inserter	B
⚠1	C1125	Sheet feeder up/down drive failure (upper)	<When FS-526+PI-505 is installed> • The tray lower limit sensor /Up (PS205) or tray upper limit sensor /Up (PS204) are not turned ON even after the set period of time has elapsed after the tray lift motor /Up (M201) is energized.	Post Inserter	B
⚠1	C1127	Punch shift motor drive malfunction	<When FS-526+PK-516 is installed> • The PK punch home sensor (PS301) is not turned ON even after the set period of time has elapsed while the punch drive motor (M301) is energized.	Punch	B
⚠1	C1130	1st stopper motor drive malfunction	<When FS-526+ZU-606 is installed> • The 1st folding stopper home sensor (PS603) is not turned ON even after the set period of time has elapsed after the 1st stopper motor (M602) starts searching home position.	Z fold	B
⚠1	C1131	2nd stopper motor drive malfunction	<When FS-526+ZU-606 is installed> • The 2nd stopper home sensor (PS604) is not turned ON even after the set period of time has elapsed after the 2nd stopper motor (M603) starts searching home position.	Z fold	B

	Code	Item	Detection timing	Trouble isolation	Rank
1	C1132	Output OP punch driving motor malfunction	<When FS-526+PK-516 is installed> • The PK punch oscillating home sensor (PS303) is turned neither ON nor OFF even after the set period of time has elapsed while the punch oscillating motor (M302) is energized.	Punch	B
1	C1133	Punch shift motor drive malfunction	<When FS-526+ZU-606 is installed> • The punch shift home sensor (PS605) is not turned ON, or is not turned OFF after it is turned ON, even after the set period of time has elapsed after the punch shift motor (M605) starts searching its home position.	Z fold	B
1	C1134	Main motor cooling fan drive malfunction	<When FS-526+ZU-606 is installed> • Even after the set period of time has elapsed after the main motor cooling fan (FM601) is turned ON, the FM601 EM signal is faulty and the fan is turned OFF; the signal is faulty after each of the following three trials.	—	B
1	C1135	Punch motor drive malfunction	<When FS-526+ZU-606 is installed> • The punch motor (M604) is not turned OFF even after the set period of time has elapsed after it is turned ON.	—	B
1	C1136	Punch switchover motor drive malfunction	<When FS-526+ZU-606 is installed> • The punch switchover switch (MS601) is not turned OFF from the ON position, or not turned ON from the OFF position, even after the set period of time has elapsed after the punch switchover motor (M608) is turned ON.	Z fold	B
	C1137	• Undetectable			
	C1140	Side-staple rear adjust drive motor malfunction	<When FS-526 is installed> • The 2 staples alignment motor home sensor/R (PS18) is not turned ON even after the set period of time has elapsed while the alignment plate motor/R (M12) is energized.	—	B
	C1141	Side-staple paddle roller motor malfunction	<When FS-526 is installed> • The paddle motor (M16) lock signal remains set to H for a set period of time while the paddle motor (M16) is turning.	Staple	B
	C1142	Side-staple trailing paddle up-down motor malfunction	<When FS-526 is installed> • The trail edge paddle home sensor (PS20) is turned neither ON nor OFF even after the set period of time has elapsed after the trail edge paddle motor (M15) is turned ON.	Staple	B
	C1143	Side-staple rewinding paddle up-down motor malfunction	<When FS-526 is installed> • The rewind paddle home sensor (PS16) is turned neither ON nor OFF even after the set period of time has elapsed after the rewind paddle motor (M18) is turned ON.	—	B

Code	Item	Detection timing	Trouble isolation	Rank
C1144	Spare stacker board drive motor malfunction	<When FS-526 is installed> • The stacker plate home sensor (PS11) is turned neither ON nor OFF even after the set period of time has elapsed while the stacker plate motor (M17) is energized.	—	B
C1145	End stopper drive motor malfunction	<When FS-526 is installed> • The 2 staples trail edge stopper home sensor (PS22) is turned neither ON nor OFF even after the set period of time has elapsed after the 2 staples trail edge stopper motor (M19) is turned ON. • The 2 staples trail edge stopper standby sensor/1 (PS23) is turned neither ON nor OFF even after the set period of time has elapsed after the 2 staples trail edge stopper motor (M19) is turned ON. • The 2 staples trail edge stopper standby sensor/2 (PS42) is turned neither ON nor OFF even after the set period of time has elapsed after the 2 staples trail edge stopper motor (M19) is turned ON.	—	B
C1150	Center-staple rear adjust drive motor malfunction	<When FS-526+SD-508 is installed> • The center staple alignment motor home sensor/R (PS31) is turned neither ON nor OFF even after the set period of time has elapsed after the center staple alignment motor /R (M21) is turned ON. <When FS-527+SD-509 is installed> • The center staple alignment home sensor/R (PS41) is turned neither ON nor OFF even after the set period of time has elapsed after the center staple alignment motor/R (M23) is turned ON.	Half-Fold/ Tri-Fold Center Stapling	B
C1151	Center-staple stapler drive motor malfunction	<When FS-526+SD-508 is installed> • The stapler home sensor (PS33) is turned neither ON nor OFF even after the set period of time has elapsed after the center staple motor (M23) is turned ON.	Half-Fold/ Tri-Fold Center Stapling	B
C1152	Center-staple paper exit motor malfunction	<When FS-526+SD-508 is installed> • The exit motor (M34) lock signal remains set to H for a set period of time while the exit motor (M34) is turning.	Half-Fold/ Tri-Fold Center Stapling	B
C1153	Center-staple paddle up-down motor malfunction	<When FS-526+SD-508 is installed> • The paddle home sensor/C (PS37) is turned neither ON nor OFF even after the set period of time has elapsed after the center staple paddle lift motor/C (M26) is turned ON.	Half-Fold/ Tri-Fold Center Stapling	B

Code	Item	Detection timing	Trouble isolation	Rank
C1156	Center-staple paddle roller motor malfunction (trailing edge)	<When FS-526+SD-508 is installed> • The center staple paddle/T (M29) lock signal remains set to L for a set period of time while the center staple paddle/T (M29) is turning. <When FS-527+SD-509 is installed> • Even after the set period of time has elapsed after the upper paddle motor (M21) starts running, a change of motor lock signal is not detected and neither the paper detection sensor/1 (PS43) nor the paper detection sensor/2 (PS44) is turned ON.	Half-Fold/ Tri-Fold Center Stapling	B
C1157	Center-staple paddle roller motor malfunction (middle)	<When FS-526+SD-508 is installed> • The center staple paddle/C (M30) lock signal remains set to L for a set period of time while the center staple paddle/C (M30) is turning.	Half-Fold/ Tri-Fold Center Stapling	B
C1182	Shift motor drive malfunction	<When JS-504 is installed> • The shift home sensor (PS6) is not blocked after the set period of time has elapsed after the shift motor (M2) is turned ON (start of moving to the home position.) • The shift home sensor (PS6) is not unblocked twice in a row after the set period of time has elapsed after the shift motor (M2) is turned ON (start of moving to the shift position.) <When FS-527 is installed> • When moving to the front (home) position: The tray 1 shift home sensor (PS25) is not turned ON even after the set period of time has elapsed after the tray 1 shift motor (M16) is turned ON. • When moving to the rear (shift) position: The tray 1 shift home sensor (PS25) is not turned OFF even after the set period of time has elapsed after the tray 1 shift motor (M16) is turned ON.	Staple	B
C1183	Elevate drive malfunction	<When FS-527 is installed> • During downward movement, the tray 1 upper limit sensor (PS24) is turned OFF and the tray 1 lower limit sensor (PS21) is turned ON. • The elevate motor (M15) lock signal remains set to H for a set period of time while the elevate motor (M15) is turning. • The tray1 upper position switch (SW2) is turned ON even after the set period of time has elapsed while the elevate motor (M15) is energized. • The tray1 lower position switch (SW3) is turned ON even after the set period of time has elapsed while the elevate motor (M15) is energized.	—	B

	Code	Item	Detection timing	Trouble isolation	Rank
⚠1	C1190	Alignment plate motor drive malfunction	<When FS-527 is installed> • The alignment plate home sensor (PS17) is turned neither ON nor OFF even after the set period of time has elapsed after the alignment plate motor (M13) is turned ON.	—	B
	C1191	• Undetectable			
⚠1	C1194	Leading edge stopper motor drive malfunction	<When FS-527 is installed> • The leading edge stopper home sensor (PS20) is turned neither ON nor OFF even after the set period of time has elapsed after the leading edge stopper motor (M14) is turned ON.	Staple	B
	C11A0	• Undetectable			
⚠1	C11A1	Tray 2 exit roller pressure/ retraction malfunction	<When FS-527 is installed> • The exit roller pressure sensor (PS12) is turned neither ON nor OFF even after the set period of time has elapsed after the exit roller retraction motor (M9) is turned ON.	—	B
⚠1	C11A2	Accommodation roller pressure/ retraction malfunction	<When FS-527 is installed> • The accommodation roller pressure sensor (PS13) is turned neither ON nor OFF even after the set period of time has elapsed after the accommodation roller retraction motor (M10) is turned ON.	—	B
	C11A3	• Undetectable			
	C11A4				
	C11A5				
	C11A6				
⚠1	C11A7	Tray 3 exit roller pressure/ retraction malfunction	<When JS-603 is installed> • The exit roller pressure sensor (PS12) is turned neither ON nor OFF even after the set period of time has elapsed after the exit roller retraction motor (M9) is turned ON.	—	B
⚠1	C11B0	Stapler movement drive malfunction	<When FS-527 is installed> • During home position search, neither the stapler home sensor/1 (PS18) nor the stapler home sensor/2 (PS19) is turned ON or OFF even after the set period of time has elapsed after the stapler movement motor (M11) is turned ON.	Staple	B
	C11B1	• Undetectable			
⚠1	C11B2	Staple drive malfunction	<When FS-527 is installed> • The stapler home sensor is turned neither ON nor OFF even after the set period of time has elapsed after the stapler motor is turned ON.	Staple	B
	C11B3	• Undetectable			
	C11B4	• Undetectable			

	Code	Item	Detection timing	Trouble isolation	Rank
1	C11B5	Saddle stapler drive malfunction	<When FS-527+SD-509 is installed> • The center stapler home sensor is turned neither ON nor OFF even after the set period of time has elapsed after the center stapler motor is turned ON.	Half-Fold/ Tri-Fold Center Stapling	B
	C11B6	• Undetectable			
1	C11C0	Punch motor drive malfunction	<When FS-527+PK-517 is installed> • The punch home sensor/1 (PS100) is not turned ON even after the set period of time has elapsed while the punch motor/1 (M100) is energized.	—	B
	C11D0	• Undetectable			
1	C11E0	Duplex path switching motor drive malfunction	<When FS-527 is installed> • The duplex path switching sensor (PS3) is turned neither ON nor OFF even after the set period of time has elapsed after the duplex path switching motor (M2) is turned ON.	—	B
1		Finisher route change malfunction	<When JS-504 is installed> • The route change home sensor (PS4) is not blocked after the set period of time has elapsed after the route change motor (M3) is turned ON (start of shifting to the lower tray route.) • The route change home sensor (PS4) is not unblocked after the set period of time has elapsed after the route change motor (M3) is turned ON (start of shifting to the upper tray route.)	—	B
1	C11E1	Upper lower path switching motor drive malfunction	<When FS-527 is installed> • The upper lower path switching sensor (PS26) is turned neither ON nor OFF even after the set period of time has elapsed after the upper lower path switching motor (M6) is turned ON.	—	B
1	C11E2	Tray1 path switching motor drive malfunction	<When FS-527 is installed> • The tray1 path switching home sensor (PS7) is turned neither ON nor OFF even after the set period of time has elapsed after the tray1 path switching motor (M8) is turned ON.	—	B
	C1301	• Undetectable			
	C1431	• Undetectable			
	C1432				
	C1434				
	C1453				
	C2101	PC charge cleaning malfunction	• During backward movement of the cleaner, the charging cleaner home sensor is not blocked after a predetermined period of time has elapsed.	—	B

<table>
<tr><th>Code</th><th>Item</th><th>Detection timing</th><th>Trouble isolation</th><th>Rank</th></tr>
<tr><td>C2151</td><td>Secondary transfer roller pressure welding alienation</td><td>• The pressure welding alienation sensor doesn't turn OFF (retracting) even after the lapse of a given period of time after the 2nd image transfer pressure retraction motor has started rotating during the 2nd image transfer roller is retracting.
• The pressure welding alienation sensor doesn't turn ON (pressuring) even after the lapse of a given period of time after the 2nd image transfer pressure retraction motor has started rotating during the 2nd image transfer roller is pressuring.</td><td>—</td><td>B</td></tr>
<tr><td>C2152</td><td>Transfer belt pressure welding alienation</td><td>• At the completion of transfer belt pressure/retraction operations, the pressure welding alienation sensor/K or the pressure welding alienation sensor/color is not in the status corresponding to each of the transfer belt pressure/retraction operations. See the table below.
• Even after a predetermined period of time has elapsed since the transfer belt starts pressure/retraction operation, the pressure welding alienation sensor/K or the pressure welding alienation sensor/color is not in the status corresponding to each of the transfer belt pressure/retraction operations. See the table below.
<table>
<tr><th>Operation</th><th>Position</th><th>Sensor status (K: Color)</th></tr>
<tr><td>• Color and K retraction → K pressure
• Color and K pressure → K pressure</td><td>K pressure</td><td>ON (not blocked) :OFF (blocked)</td></tr>
<tr><td>• Color and K retraction → Color and K pressure
• K pressure → Color and K pressure</td><td>Color and K pressure</td><td>ON (not blocked):ON (not blocked)</td></tr>
<tr><td>• K pressure → Color and K retraction
• Color and K pressure →Color and K retraction</td><td>Color and K retraction</td><td>OFF (blocked): OFF (blocked)</td></tr>
</table></td><td>—</td><td>B</td></tr>
</table>

Code	Item	Detection timing	Trouble isolation	Rank
C2160	PC charge (C) malfunction	• When electrostatic charge output is ON, electrostatic charge leak detection system continues to detect leaks for a predetermined period of time. In this case, C2164 is displayed at the first detection and then after the trouble is reset, a leak IU identification process is executed. Then the trouble code corresponding to the IU color is displayed.	—	B
C2161	PC charge (M) malfunction		—	B
C2162	PC charge (Y) malfunction		—	B
C2163	PC charge (K) malfunction		—	B
C2164	PC charge malfunction		—	B
C2204	Waste toner agitating motor's failure to turn	• The waste toner agitating motor lock sensor continues to be blocked or unblocked for a predetermined period of time when the motor is turning.	—	B
C2253	Color PC drum motor's failure to turn	• The motor lock signal remains HIGH for a predetermined continuous period of time while the motor is turning.	—	B
C2254	Color PC drum motor's turning at abnormal timing	• The motor lock signal remains LOW for a predetermined continuous period of time while the motor remains stationary.	—	B
C2255	Color developing motor's failure to turn	• The motor lock signal remains HIGH for a predetermined continuous period of time while the motor is turning.	—	B
C2256	Color developing motor's turning at abnormal timing	• The motor lock signal remains LOW for a predetermined continuous period of time while the motor remains stationary.	—	B
C2257	Cleaner motor's failure to turn	• The motor lock signal remains HIGH for a predetermined continuous period of time while the motor is turning.	—	B
C2258	Cleaner motor's turning at abnormal timing	• The motor lock signal remains LOW for a predetermined continuous period of time while the motor remains stationary.	—	B
C2259	K developing motor's failure to turn	• The motor lock signal remains HIGH for a predetermined continuous period of time while the motor is turning.	—	B
C225A	K developing motor's turning at abnormal timing	• The motor lock signal remains LOW for a predetermined continuous period of time while the motor remains stationary.	—	B
C225B	K PC drum motor's failure to turn	• The motor lock signal remains HIGH for a predetermined continuous period of time while the motor is turning.	—	B
C225C	K PC drum motor's turning at abnormal timing	• The motor lock signal remains LOW for a predetermined continuous period of time while the motor remains stationary.	—	B
C2350	Toner suction fan motor's failure to turn	• The motor lock signal remains HIGH for a predetermined continuous period of time while the motor is turning.	—	B
C2353	IU cooling fan motor's failure to turn	• The motor lock signal remains HIGH for a predetermined continuous period of time while the motor is turning.	—	B

Code	Item	Detection timing	Trouble isolation	Rank
C2354	Rear side cooling fan motor's failure to turn	• The motor lock signal remains HIGH for a predetermined continuous period of time while the motor is turning.	—	B
C2551	Abnormally low toner density detected cyan TCR sensor	• When sampling data is determined in TC ratio calculation control, TCR sensor output is higher than a predetermined value for a predetermined number of times in a row even though there is toner in the sub hopper.	—	B
C2552	Abnormally high toner density detected cyan TCR sensor	• TC ratio in the developing unit which is determined by Toner replenishing amount control mechanism, is a predetermined value or more for a given number of times consecutively.	—	B
C2553	Abnormally low toner density detected magenta TCR sensor	• When sampling data is determined in TC ratio calculation control, TCR sensor output is higher than a predetermined value for a predetermined number of times in a row even though there is toner in the sub hopper.	—	B
C2554	Abnormally high toner density detected magenta TCR sensor	• TC ratio in the developing unit, which is determined by toner replenishing amount control mechanism, is a predetermined value or more for a given number of times consecutively.	—	B
C2555	Abnormally low toner density detected yellow TCR sensor	• When sampling data is determined in TC ratio calculation control, TCR sensor output is higher than a predetermined value for a predetermined number of times in a row even though there is toner in the sub hopper.	—	B
C2556	Abnormally high toner density detected yellow TCR sensor	• TC ratio in the developing unit, which is determined by toner replenishing amount control mechanism, is a predetermined value or more for a given number of times consecutively.	—	B
C2557	Abnormally low toner density detected black TCR sensor	• When sampling data is determined in TC ratio calculation control, TCR sensor output is higher than a predetermined value for a predetermined number of times in a row even though there is toner in the sub hopper.	—	B
C2558	Abnormally high toner density detected black TCR sensor	• TC ratio in the developing unit, which is determined by toner replenishing amount control mechanism, is a predetermined value or more for a given number of times consecutively.	—	B

Code	Item	Detection timing	Trouble isolation	Rank
C2559	Cyan TCR sensor adjustment failure	• TCR sensor automatic adjustment does not function properly, failing to adjust to an appropriate value.	—	B
C255A	Magenta TCR sensor adjustment failure		—	B
C255B	Yellow TCR sensor adjustment failure		—	B
C255C	Black TCR sensor adjustment failure		—	B
C2561	Cyan TCR sensor failure	• Alarm signals for a TCR sensor are detected more than the predetermined number of times. This detection is used for detecting disconnection of TCR sensor connector.	—	B
C2562	Magenta TCR sensor failure		—	B
C2563	Yellow TCR sensor failure		—	B
C2564	Black TCR sensor failure		—	B
C2650	Main backup media access error	• Contact the responsible people of KMBT before taking some countermeasures.	—	—
C2651	EEPROM access error (IU C)	• The re-written data, which has been read out, checked and founded as error, is read out again and found as error. • The error was found when reading out the counter value.	—	C
C2652	EEPROM access error (IU M)		—	C
C2653	EEPROM access error (IU Y)		—	C
C2654	EEPROM access error (DC K)		—	C
C2A14	Drum unit/K new release failure	• The status with the new unit is not cleared after the new drum unit/K is set.	—	C
C2A21	Toner cartridge/C new release failure	• The status with the new cartridge is not cleared after the new toner cartridge is set	—	C
C2A22	Toner cartridge/M new release failure		—	C
C2A23	Toner cartridge/Y new release failure		—	C
C2A24	Toner cartridge/K new release failure		—	C
C3101	Fusing roller separation failure	• With the fusing roller being retracted, the pulse of the encoder sensor does not change even after the specified period of time has passed after the fusing pressure retraction motor started rotating. • With the fusing roller being pressed, the encoder pulse sensor does not change even after the specified period of time has passed after the fusing pressure retraction motor started rotating. • With the pressure roller being pressed, the pressure home sensor did not turn ON (pressed) even after the fusing retraction position sensor counted up the specified number of pulse after the fusing pressure retraction motor started rotating.	—	B

Code	Item	Detection timing	Trouble isolation	Rank
C3102	Fusing roller failure to turn	• When the IH power supply is turned ON, pulse signals are not input either of the heating roller rotation sensor within a predetermined period of time.	—	A
C3201	Fusing motor failure to turn	• The motor lock signal remains HIGH for a predetermined continuous period of time while the motor remains stationary.	—	B
C3202	Fusing motor turning at abnormal timing	• The motor lock signal remains LOW for a predetermined continuous period of time while the motor remains stationary.	—	B
C3303	Fusing cooling fan motor/1 failure to turn	• The fan motor lock signal remains HIGH for a predetermined continuous period of time while the motor remains stationary.	—	B
C3304	Fusing cooling fan motor/2 failure to turn	• The fan motor lock signal remains HIGH for a predetermined continuous period of time while the motor remains stationary.	—	B
C3305	Fusing cooling fan motor/3 failure to turn	• The fan motor lock signal remains HIGH for a predetermined continuous period of time while the motor remains stationary.	—	B
C3424	Fusing heaters trouble (soaking side)	• After warm-up operation starts, the soaking roller thermistor does not detect a temperature as high as a predetermined one though a predetermined period of time has elapsed.	—	A
C3425	Fusing heaters trouble (NC sensor)	• After warm-up operation starts, the heating roller temperature sensor/1 does not detect a temperature as high as a predetermined one though a predetermined period of time has elapsed.	—	A
C3721	Fusing abnormally high temperature detection (Center of the heating roller)	• The heating roller temperature sensor/2 continues to detect a temperature higher than a predetermined one for a predetermined period of time. • The signal is turned ON to activate the hard ratchet in the middle of the heating side.	—	A
C3722	Fusing abnormally high temperature detection (Edge of the heating roller)	• The heating roller temperature sensor/3 continues to detect a temperature higher than a predetermined one for a predetermined period of time. • The signal is turned ON to activate the hard ratchet at the edges of the heating side.	—	A
C3724	Fusing abnormally high temperature detection (soaking side)	• The soaking roller thermistor/1 continues to detect a temperature higher than a predetermined one for a predetermined period of time. • The signal is turned ON to activate the hard ratchet on the soaking side.	—	A
C3725	Fusing abnormally high temperature detection (NS sensor)	• The heating roller temperature sensor/1 continues to detect a temperature higher than a predetermined one for a predetermined period of time.	—	A

Code	Item	Detection timing	Trouble isolation	Rank
C3822	Fusing abnormally low temperature detection (Edge of the heating roller)	• The heating roller thermistor/2 continues to detect a temperature lower than a predetermined one for a predetermined period of time.	—	A
C3824	Fusing abnormally low temperature detection (soaking side)	• The soaking roller thermistor/1 continues to detect a temperature lower than a predetermined one for a predetermined period of time.	—	A
C3825	Fusing abnormally low temperature detection (NC sensor)	• The heating roller temperature sensor/1 continues to detect a temperature lower than a predetermined one for a predetermined period of time.	—	A
C3921	Fusing sensor wire breaks detection (Center of the heating roller)	• At the warm-up stage, the heating roller temperature sensor/2 voltage does not decrease by predetermined steps (temperature rise) within a predetermined time.	—	A
C3922	Fusing sensor wire breaks detection (Edge of the heating roller)	• At the warm-up stage, the heating roller temperature sensor/3 voltage does not decrease by predetermined steps (temperature rise) within a predetermined period of time.	—	A
C3924	Fusing sensor wire breaks detection (soaking side)	• At the warm-up stage, the soaking roller thermistor/1 voltage does not decrease by predetermined steps (temperature rise) within a predetermined period of time.	—	A
C3925	Fusing sensor wire breaks detection (NC sensor)	• At the warm-up stage, the heating roller temperature sensor/1 voltage does not increase by predetermined steps (temperature rise) within a predetermined period of time.	—	A
C392A	Fusing sensor contamination (NC sensor)	• While checking the contamination on the heating roller temperature sensor/1, detected temperature of the heating roller thermistor/1 exceeded the detected temperature of the heating roller temperature sensor/1 for over the predetermined value for the predetermined period of time.	—	A
C3B02	IH malfunction (CPU)	• A failure in communication with the fusing CPU continues for a predetermined period of time.	—	A
C3B03	IH malfunction (monitor)	• Though the IH heater is ON, this status cannot be detected mechanically. (IH heater operation failure) • Though the IH heater is OFF, mechanically, the ON status is detected. (Malfunction of IH heater operation)	—	A

Code	Item	Detection timing	Trouble isolation	Rank
C3B05	IH temperature sensor defect	• While the IH heater was on, IH temperature sensor was disconnected for more than the predetermined period of time. • While the IH heater was on, short circuit on IH temperature sensor continued for more than the predetermined period of time. • While the IH heater was on, temperature change occurred within the predetermined period of time with over the predetermined range, and they continued for more than the predetermined period of time. • While the IH heater was on, temperature around the heat radiator stayed high for over the predetermined period of time.	—	A
C3B06	IH surge error	• While the IH heater was on, IH stopped due to input voltage which exceeded that of surge detection voltage, and the surge detection voltage continued for more than the predetermined period of time.	—	A
C3B07	IH input power error	• While the IH heater was on, input power stayed at the high voltage power detection value or over for more than the predetermined period of time. • While the IH heater was on, input power was at the low power detection value or under for more than the predetermined period of time. • While the IH heater was on, input power was at the high voltage detection value or over for more than the predetermined period of time. • While the IH heater was on, input power was below the low voltage detection value or under for more than the predetermined period of time. • While the IH heater was on, inverter power stayed at the upper limit value or over for more than the predetermined period of time. • While the IH heater was on, output voltage halt was detected.	—	A
C3B08	IH input voltage error	• While the IH heater was on, input power was at the high voltage detection value or over for more than the predetermined period of time. • While the IH heater was on, input voltage was at the low power detection value or under for more than the predetermined period of time.	—	B
C4101	Polygon motor rotation trouble	• The polygon motor fails to turn stably even after the lapse of a given period of time after activating the polygon motor. • Motor lock signal detects HIGH for a given period time consecutively during the polygon motor is rotating.	—	B

Code	Item	Detection timing	Trouble isolation	Rank
C4301	PH cooling fan motor failure to turn	• The fan motor lock signal remains HIGH for a predetermined continuous period of time while the motor remains stationary.	—	B
C4501	Laser malfunction	• SOS signal is not detected even after the lapse of a given period of time after staring the laser output. • SOS signal is not detected for a given period of time during printing or IDC sensor adjustment.	—	B
C5104	Transfer belt motor's failure to turn	• The motor lock signal remains HIGH for a predetermined continuous period of time while the motor remains stationary.	—	B
C5105	Transfer belt motor's turning at abnormal timing	• The motor lock signal remains LOW for a predetermined continuous period of time while the motor remains stationary.	—	B
C5304	IH cooling fan motor/1's failure to turn	• The fan lock signal remains HIGH for a predetermined continuous period of time while the motor remains stationary.	—	B
C5306	IH cooling fan motor/2's failure to turn	• The fan lock signal remains HIGH for a predetermined continuous period of time while the motor remains stationary.	—	B
C5351	Power supply cooling fan motor/1's failure to turn	• The fan lock signal remains HIGH for a predetermined continuous period of time while the motor remains stationary.	—	B
C5354	Ozone ventilation fan motor's failure to turn	• The fan lock signal remains HIGH for a predetermined continuous period of time while the motor remains stationary.	—	B
C5356	Cooling fan motor's failure to turn	• The fan lock signal remains HIGH for a predetermined continuous period of time while the motor remains stationary.	—	B
C5370	MFP control board cooling fan motor's failure to turn	• The fan lock signal remains HIGH for a predetermined continuous period of time while the motor remains stationary.	—	B
C5372	MFP control board CPU temperature failure	• Temperature failure of CPU on the MFP board was detected.	—	C

Code	Item	Detection timing	Trouble isolation	Rank
C6102	Drive system home sensor malfunction	• The scanner home sensor is unable to detect the scanner located at its home position. • The scanner home sensor is unable to detect a scanner even when the scanner motor has been driven to move the scanner over the maximum travelling distance. • The scanner home sensor detects the scanner when the scanner has moved the maximum travelling distance from the position, at which it blocks the scanner home sensor.	Scanner	B
C6103	Slider over running	• The scanner home sensor detects the scanner at its home position during a period of time that begins with the time when a prescan command and a scan preparation command are executed and ends when a home return command is executed.		B
C6301	Optical cooling fan motor's failure to turn	• The fan lock signal remains HIGH for a predetermined continuous period of time while the motor remains stationary.		B
C6704	Image input time out	• Image data is not input from the image processing board (IPB) to the printer control board (PRCB).		C
C6751	CCD clamp/gain adjustment failure	• The adjustment value is 0 or 255 during a CCD clamp adjustment. • The peak value of the output data is 64 or less during a CCD gain adjustment.		B
C6752	ASIC clock input error (front side)	• When starting the scanner, verification on reading and writing the predetermined value for image processing ASIC on CCD board was conducted, and verification failure was detected.	—	C
C6753	ASIC clock input error (back side)		—	C
C6901	DSC board mount failure 1	• When MFP detects that DSC board is not properly installed.	—	C
C6902	DSC Bus check NG1-1	• When DSC bus check detects an error.	—	C
C6903	DSC Bus check NG1-2		—	C
C6911	Undetectable			
C6912				
C6913				
C6F01	Scanner sequence trouble 1	• The original transport interval becomes shorter than the designed value due to an original transport control error in original reading in ADF.	Scanner	C
C6F02	Reserved			
C6F03	Reserved			
C6F04	Reserved			
C6F05	Reserved			
C6F06	Reserved			
C6F07	Reserved			

Code	Item	Detection timing	Trouble isolation	Rank
C6F08	Reserved			
C6F09	Reserved			
C6F0A	Reserved			
C6FDC	Reserved			
C8101	Before reading pressure welding alienation mechanism	• During a pressure motion being performed, the read roller sensor (PS6) output does not change from H to L. • During a retraction motion being performed, the read roller sensor (PS6) output does not change from L to H.	—	B
C8102	Turn around pressure welding alienation trouble	• During a pressure motion being performed, the reverse roller sensor (PS7) output does not change from H to L. • During a retraction motion being performed, the reverse roller sensor (PS7) output does not change from L to H.	—	B
C8103	Lift up mechanism trouble (Upward movement)	• The lift up upper sensor (PS16) is not turned ON after a lapse of a given time after the lift-up motor (M6) moves up (is turned forward).	—	B
C8104	Glass movement trouble	• The glass home sensor (PS203) output does not change from H to L after a lapse of a given time while the original glass moving motor (M202) is working. • The glass home sensor (PS203) output does not change from L to H after a lapse of a given time while the original glass moving motor (M202) is working.	—	B
C8105	Undetectable			
C8106	Lift up mechanism failure (Downward movement)	• The lift up lower sensor (PS15) is not turned ON after a lapse of a given time after the lift-up motor (M6) goes down (is turned backward).	—	B
C8302	Cooling fan failure	• The lock signal continues to detect H during a given time while the cooling fan (FM1) is spinning • The lock signal continues to detect L during a given time while the cooling fan (FM1) is during halts.	—	B
C8401	EEPROM failure	• EEPROM does not access normally	—	C
C9401	Exposure turning on the lamp trouble detection	• The output from the CCD sensor is a predetermined value or less during CCD sensor gain adjustment.	Scanner	A
C9402	Exposure turning on the lamp abnormally detection	• The average output value of the CCD sensor with the scanner at its standby position is a predetermined value or more at the end of a scan job.	Scanner	A
CA051	Standard controller configuration failure	• The controller of the printer control board (PRCB) is faulty.	—	C
CA052	Controller hardware error	• A controller hardware error is detected in the network I/F.	—	C

Code	Item	Detection timing	Trouble isolation	Rank
CA053	Controller start failure	• A controller start failure is detected in the controller interface.	—	C
CB001	FAX board error 1	See the FK-502 Service Manual.	—	C
CB002	FAX board error 2		—	C
CB003	FAX board error 3		—	C
CB051	FAX board mount failure line 1		—	C
CB052	FAX board mount failure line 2		—	C
CB110	FAX driver error: Instance generation error or observer registration error		—	C
CB111	FAX driver error: Configuration space initialization NG		—	C
CB112	FAX driver error: Semaphore acquisition, release error		—	C
CB113	FAX driver error: Sequence error among main body tasks		—	C
CB114	FAX driver error: Message queue control error		—	C
CB115	FAX driver error: Main body - sequence error among FAX boards		—	C
CB116	FAX driver error: FAX board nonresponse (Nonresponse after initialization)		—	C
CB117	FAX driver error: ACK waiting timeout error		—	C
CB118	FAX driver error: Receiving undefined frame		—	C
CB119	FAX driver error: DMA transfer error		—	C
CB120	JC soft error		—	C
CB122	Device error (GA LOCAL SRAM)		—	C
CB123	Device error (DRAM)		—	C
CB125	Device error (GA)		—	C
CB126	Timeout error due to nonresponse from DC during suspension process		—	C
CB127	Timeout error due to nonresponse from CC during suspension process		—	C

Code	Item	Detection timing	Trouble isolation	Rank
CB128	Timeout error due to non-response from LINE during suspension process	See the FK-502 Service Manual.	—	C
CB129	Timeout error due to non-response from file system/file driver during suspension process		—	C
CB130	MIF driver error: Driver soft error		—	C
CB131	MIF driver error: Reception frame length error from main		—	C
CB132	MIF driver error: Reception frame header error from main		—	C
CB133	MIF driver error: 232C i/f sequence error		—	C
CB134	MIF driver error: DPRAM i/f sequence error		—	C
CB135	MIF driver error: DPRAM CTL/STL register error		—	C
CB136	MIF driver error: AKC waiting timeout		—	C
CB137	MIF driver error: DPRAM RESET reception		—	C
CB140	MSG I/F Error with JC		—	C
CB141	I/F error with main: I/F error with driver		—	C
CB142	I/F error with main: Undefined command reception		—	C
CB143	I/F error with main: Command frame length error		—	C
CB144	I/F error with main: Command parameter length error		—	C
CB145	I/F error with main: Undefined parameter		—	C
CB146	I/F error with main: Command/response sequence error		—	C
CB150	Line control: External class instance acquisition error		—	C
CB151	Line control: Job start error (Starting job parameter error/child job generation error)		—	C

Code	Item	Detection timing	Trouble isolation	Rank
CB152	Line control: Doc access error (Report buf access error)	See the FK-502 Service Manual.	—	C
CB153	Line control: Response wait timeout from external task		—	C
CB154	Line control: Internal que table control error (create/enque/deque)		—	C
CB160	1 destination control: Instance generation error		—	C
CB161	1 destination control: Timeout error		—	C
CB162	1 destination control: Interface error		—	C
CB163	1 destination control: Message que control error		—	C
CB164	1 destination control: Semaphore acquisition release error		—	C
CB165	1 destination control: Observer registration error		—	C
CB166	1 destination control: Reception resource check error		—	C
CB167	1 destination control: Deployment error of sending image information		—	C
CB168	1 destination control: Serialization error of receiving image		—	C
CB169	1 destination control: Access error to quick memory data		—	C
CB170	Page control: Internal que table control error (create/enque/deque)		—	C
CB171	Page control: Instance generation error		—	C
CB172	Page control: Timeout error		—	C
CB173	Page control: Interface error		—	C
CB174	Page control: Semaphore acquisition release error		—	C
CB175	Page control: Observer registration error		—	C

Code	Item	Detection timing	Trouble isolation	Rank
CB176	Page control: Unable to check TTI domain	See the FK-502 Service Manual.	—	C
CB177	Page control: Error return from TTI rasterizer		—	C
CB178	Page control: Receiving job generation error		—	C
CB185	Page control: Receiving data size logic error (Receiving data are not multiples of dotline)		—	C
CB186	Page control: Image buf acquisition (alloc) error		—	C
CB187	Page control: Error return from compressor		—	C
CB188	Page control: BandBuf control error (newInstance/get/free)		—	C
CC001	Vendor connection failure	• It is detected that communications with the vendor are interrupted for a given period of time or more with “Installed” selected for the setting of vendor installation.	—	C
CC151	ROM contents error upon startup (MSC)	• A fault is detected in a sequence of ROM contents check of the MSC (PRCB) during starting	—	C
CC152	ROM contents error upon startup (scanner)	• A fault is detected in a sequence of ROM contents check of the IPB during starting.	—	C
CC153	ROM contents error upon startup (PRT)	• A fault is detected in a sequence of ROM contents check of the mechanical control board (MFPB) during starting.	—	C
CC155	Finisher ROM error	• Data of flash ROM of the finishing options is determined to be faulty when the power is turned ON.	—	C
CC156	ADF ROM error	• Upgrade of the firmware has not been successful.	—	C
1 CC157	Finisher ROM error (RU)	• When a communication error is detected between the main body and the horizontal transport unit.	—	C
1 CC158	Finisher ROM error (ZU)	• Data of flash ROM of the z-folding unit is determined to be faulty when the power is turned ON.	—	C
1 CC159	ROM contents error upon startup (DSC1)	• A fault is detected in a sequence of ROM contents check of the DSC board during starting.	—	C
1 CC15A	ROM contents error upon startup (DSC2)		—	C
1 CC15B	Finisher ROM error (SD)	• Data of flash ROM of the saddle unit is determined to be faulty when the power is turned ON.	—	C

Code	Item	Detection timing	Trouble isolation	Rank
CC163	ROM contents error (PRT)	• The wrong model of firmware is detected in the engine during the initial connection to the engine is being checked.	—	C
CC164	ROM contents error (MSC)	• The wrong model of firmware is detected in the MFP board when the main power switch is turned ON.	—	C
CC165	ROM contents error (ADF)	• When the power is turned ON, DF control board or firmware error is detected.	—	C
CC170	Dynamic link error during starting (AP0)	• A dynamic link error occurs in the program on the MFP board due to an insufficient memory space available, a ROM fault, or other reason when the main power switch is turned ON.	—	C
CC171	Dynamic link error during starting (AP1)		—	C
CC172	Dynamic link error during starting (AP2)		—	C
CC173	Dynamic link error during starting (AP3)		—	C
CC174	Dynamic link error during starting (AP4)		—	C
CC180	Dynamic link error during starting (LDR)		—	C
CC181	Dynamic link error during starting (IBR)		—	C
CC182	Dynamic link error during starting (IID)		—	C
CC183	Dynamic link error during starting (IPF)		—	C
CC184	Dynamic link error during starting (IMY)		—	C
⚠1 CC185	Dynamic link error during starting (SPF)	• A dynamic link error occurs in the program on the MFP board due to an insufficient memory space available, a ROM fault, or other reason when the main power switch is turned ON.	—	C
⚠1 CC186	Dynamic link error during starting (OAP)		—	C
CC190	Outline font load error	• An error occurred while loading the outline font.	—	C
CD002	JOB RAM save error	• The error in save of job data to the memory/ hard disk and its read error are detected.	—	C
CD004	Hard disk access error (connection failure)	• Unable to communicate between the hard disk and printer control board (PRCB).	—	C
CD00F	Hard disk data transfer error	• Data transfer from the hard disk is faulty.	—	C
CD010	Hard disk unformat	• Unformatted hard disk is connected.	—	C
CD011	Hard disk out of specifications mounted	• A hard disk that falls outside the specifications is connected.	—	C
CD020	Hard disk verify error	• The data abnormality is detected by the HDD verify check.	—	C
CD030	Hard disk management information reading error	• The machine fails to read administrative information data saved in the hard disk.	—	C

Code	Item	Detection timing	Trouble isolation	Rank
CD041	HDD command execution error Address Mark Not Found	• The error occurred inside the hard disk.	—	C
CD042			—	C
CD043			—	C
CD044			—	C
CD045			—	C
CD046			—	C
CD047	HDD SCSI library error	• The error occurred inside the hard disk.	—	C
CD048			—	C
CD049			—	C
CD04A			—	C
CD04B			—	C
CD201	File memory mounting error	• The file memory is not mounted. • The file has any abnormality.	—	C
CD202	Memory capacity discrepancy	• File memory capacity on the printer control board (PRCB) is not enough. • File memory capacity necessary for duplex printing is not enough during duplex unit mounting.	—	C
CD203	Memory capacity discrepancy 2	• File memory capacity on the printer control board (PRCB) is not enough.	—	C
CD211	PCI-SDRAM DMA operation failure	• Hardware related to the transfer of memory image of the printer control board (PRCB) fails to respond.	—	C
CD212	Compression/extraction timeout detection	• Hardware related to the BTC compression function of the printer control board (PRCB) fails to respond.	—	C
CD231	No Fax memory at FAX board mounting	• The DIMM for FAX is not mounted during the FAX board is mounting. • The FAX board is not mounted when the FAX board mounting is set ON at Service Mode.	—	C
CD241	Encryption ASIC error	• Initialization error of the encrypted ASIC is detected during the machine is starting.	—	C
CD242	Encryption ASIC mounting error	• The faulty of the installation of encrypted ASIC is detected during the machine is starting.	—	C
CD251	Undetectable			
CD252	No relay circuit boards for IC-412 mounting at IC-412 mount setting	• Relay circuit boards (VI-505) are not mounted when the IC-412 is set to mount setting at Service Mode.	—	C
CD261	USB host board failure	• When a failure is detected in USB host board included in the local interface kit. • Non-standard USB device is connected.	—	C
CD271	i-Option activated and additional memory not installed	• While the i-Option is activated, the additional memory included in UK-203 is not installed.	—	C

Code	Item	Detection timing	Trouble isolation	Rank
⚠1 CD272	i-Option activated and additional memory and HDD not installed	• While the i-Option is activated, the additional memory included in UK-203 and the HDD are not installed.	—	C
CD3##	NVRAM data error	• Abnormality is detected by the abnormal check of each NVRAM data.	—	—
CD370	NVRAM data multiple errors	• Multiple errors (Over 5) are detected by the abnormal check of each NVRAM data.	—	—
CDC##	Trouble related to security	• Contact the responsible people of KMBT before taking some countermeasures.	—	—
CD401	NACK command incorrect	• When abnormality is found in the communication of controller.	—	C
CD402	ACK command incorrect		—	C
CD403	Checksum error		—	C
CD404	Receiving packet incorrect		—	C
CD405	Receiving packet analysis error		—	C
CD406	ACK receiving timeout		—	C
CD407	Retransmission timeout		—	C
CE001	Abnormal message queue	• MFP board (MFPB) is faulty.	—	C
CE002	Message and method parameter failure		—	C
CE003	Task error		—	C
CE004	Event error		—	C
CE005	Memory access error		—	C
CE006	Header access error		—	C
CE007	DIMM initialize error		—	C
CEEE1	MFP board malfunction	• MFP board (MFPB) is faulty.	—	C
CEEE2	Scanner section malfunction	• A scanner part is faulty.	—	A
CEEE3	Printer control board malfunction	• Printer control board (PRCB) is faulty.	—	A

- The machine displays an abort code (CF###) on the control panel as it becomes unable to process tasks properly through its software control.
- When the system program is aborted, check the electrical component, unit, option, and connection relating to the specific type of the abort condition.

Code	Item		Relevant electrical components, units, and options	Rank
CF001	CT_singleList table abnormal	An exceptional instance occurred due to the unexpected parameter in the system F/W.	• MFP board (MFPB)	C
CF004	CT_queue full abnormal			C
CF011	Array link abnormal			C
CF012	FAT link abnormal			C
CF013	File size abnormal			C
CF021	setDelayMessage Table OverFlow			C
CF023	MsgQue OverFlow			C
CF033	setDivTbl() limitation over			C
CF112	Compress table OverFlow	Compression malfunctions		C
CF113	Compress table check	Compression malfunctions		C
CF211	setParameterBandColorPlane() Table OverFlow	An exceptional instance occurred due to the unexpected parameter in the system F/W.		C
CF300	IR Bus Check Timeout	Image transfer error on IR input bus		C
CF411	Parity error	Communication error (between IR-systems)		C
CF421	Overrun error			C
CF431	Parity error + Overrun error			C
CF441	Framing error			C
CF451	Parity error + Framing error			C
CF461	Overrun error + Framing error			C
CF471	Parity error + Overrun error + Framing error			C
CF412	Parity error			C
CF422	Overrun error			C
CF432	Parity error + Overrun error			C
CF442	Framing error			C
CF452	Parity error + Framing error			C
CF462	Overrun error + Framing error			C
CF472	Parity error + Overrun error + Framing error			C
CF510	Parity error			C

Code	Item		Relevant electrical components, units, and options	Rank
CF520	Framing error	Communication error (IR detected)	• MFP board (MFPB)	C
CF530	Parity error + Framing error			C
CF540	Overrun error			C
CF550	Parity error + Overrun error			C
CF560	Overrun error + Framing error			C
CF570	Parity error + Overrun error + Framing error			C
CF580	Frame distortion of ADF			C
CF600	Report receiving of print start that is out of sequence		• MFP board (MFPB)/ Engine	C
CF601	Report receiving of paper feeding that is out of sequence			C
CF604	Outside IF/Command queue		• MFP board (MFPB)	C
CF614	“Output sequence” queue	An exceptional instance occurred due to the unexpected parameter in the system F/W.		C
CF624	Panel LCD date queue			C
CF704	Common data “Delete-waiting HDD accumulated job ID” queue			C
CF714	IRC/Command queue			C
CF724	Engine/Command queue		• MFP board (MFPB)/ Engine	C
CF734	Panel/Command queue		• MFP board (MFPB)/ Control Panel	C
CF744	File memory transfer start-waiting command queue		• MFP board (MFPB)	C
CF754	File memory compression requesting command queue			C
CF764	Panel instruction delete job queue			C
CF774	Warning delete job queue			C
CF784	Application instruction delete job queue			C
CF794	Output page information for duplex back side queue			C
CF7A4	Paper feed completion output pate information queue			C
CF7B4	Exposure compaction output page information queue			C
CF7C4	Pre-discharge completion output page information queue			C
CF7D4	Touch panel coordinate data queue	An exceptional instance occurred due to the unexpected parameter in the system F/W.		C
CF7E4	Direct key data queue			C
CF7F4	Scan sequence queue			C

Code	Item		Relevant electrical components, units, and options	Rank
CF802	SIO sending port...ENG		• MFP board (MFPB)/ Engine	C
CF806	SIO sending port...IRC		• MFP board (MFPB)	C
CF807	SIO sending port...ADF			C
CF806	Unsupported option trouble			
CF807				
CF812	SIO sending port...Fiery		• External controller I/F board	C
CF815	SIO sending port...PIC/PIC terminal		• MFP board (MFPB)	C
CF8ED	SIO sending port...EPNet			C
CF902	SIO receiving port...ENG		• MFP board (MFPB)/ Engine	C
CF906	SIO receiving port...IRC		• MFP board (MFPB)	C
CF907	SIO receiving port...ADF			C
CF908	Unsupported option trouble			
CF909				
CF912	SIO receiving port...Fiery		• External controller I/F board	C
CF915	SIO receiving port...PIC/PIC terminal		• MFP board (MFPB)	C
CF9ED	SIO receiving port...EPNet			C
CFA01	getOneImgTransInfoFromTh() No applied thread	An exceptional instance occurred due to the unexpected parameter in the system F/W.		C
CFA03	setTransBandAndRepeatNum() error			C
CFA06	getOneImgIndexNumFromTh() No applied thread			C
CFA11	cancelTransExec() No applied thread			C
CFA12	ImgTransInfo No space			C
CFA13	Clear Buffer Sequence error			C
CFA14	Thread software error		• Whole electrical components, units, and options	C
CFA15	Global semaphore time out (ten seconds)		• MFP board (MFPB)	C
CFA16	Thread software error (upper parameter error)			C
CFA50	IGC control error	DB error		C
CFA51		IGC internal error		C
CFB00	ASIC200 first sheet DMA00		• MFP board (MFPB)	C
CFB01	ASIC200 first sheet DMA01			C
CFB02	ASIC200 first sheet DMA02			C
CFB03	ASIC200 first sheet DMA03			C

Code	Item	Relevant electrical components, units, and options	Rank
CFB04	ASIC200 first sheet DMA04	• MFP board (MFPB)	C
CFB05	ASIC200 first sheet DMA05		C
CFB06	ASIC200 first sheet DMA06		C
CFB07	ASIC200 first sheet DMA07		C
CFB08	ASIC200 first sheet DMA08		C
CFB09	ASIC200 first sheet DMA09		C
CFB0A	ASIC200 first sheet DMA10		C
CFB0B	ASIC200 first sheet DMA11		C
CFB0C	ASIC200 first sheet DMA12		C
CFB0D	ASIC200 first sheet DMA13		C
CFB0E	ASIC200 first sheet DMA14		C
CFB0F	ASIC200 first sheet DMA15		C
CFB10	ASIC200 first sheet DMA16		C
CFB11	ASIC200 first sheet DMA17		C
CFB12	ASIC200 first sheet DMA18		C
CFB13	ASIC200 first sheet DMA19		C
CFB14	ASIC200 first sheet DMA20		C
CFB15	ASIC200 first sheet DMA21		C
CFB16	ASIC200 first sheet DMA22		C
CFB17	ASIC200 first sheet DMA23		C
CFB18	ASIC200 first sheet DMA24		C
CFB19	ASIC200 first sheet DMA25		C
CFB1A	ASIC200 first sheet DMA26		C
CFB1B	ASIC200 first sheet DMA27		C
CFB1C	ASIC200 first sheet DMA28		C
CFB1D	ASIC200first sheet DMA29		C
CFB1E	ASIC200 first sheet DMA30		C
CFB1F	ASIC200 first sheet DMA31		C
CFB20	ASIC200 second sheet DMA00		C
CFB21	ASIC200 second sheet DMA01		C
CFB22	ASIC200 second sheet DMA02		C
CFB23	ASIC200 second sheet DMA03		C
CFB24	ASIC200 second sheet DMA04		C
CFB25	ASIC200 second sheet DMA05		C
CFB26	ASIC200 second sheet DMA06		C
CFB27	ASIC200 second sheet DMA07		C
CFB28	ASIC200 second sheet DMA08		C
CFB29	ASIC200 second sheet DMA09		C
CFB2A	ASIC200 second sheet DMA10		C
CFB2B	ASIC200 second sheet DMA11		C
CFB2C	ASIC200 second sheet DMA12		C

Code	Item	Relevant electrical components, units, and options	Rank
CFB2D	ASIC200 second sheet DMA13	• MFP board (MFPB)	C
CFB2E	ASIC200 second sheet DMA14		C
CFB2F	ASIC200 second sheet DMA15		C
CFB30	ASIC200 second sheet DMA16		C
CFB31	ASIC200 second sheet DMA17		C
CFB32	ASIC200 second sheet DMA18		C
CFB33	ASIC200 second sheet DMA19		C
CFB34	ASIC200 second sheet DMA20		C
CFB35	ASIC200 second sheet DMA21		C
CFB36	ASIC200 second sheet DMA22		C
CFB37	ASIC200 second sheet DMA23		C
CFB38	ASIC200 second sheet DMA24		C
CFB39	ASIC200 second sheet DMA25		C
CFB3A	ASIC200 second sheet DMA26		C
CFB3B	ASIC200 second sheet DMA27		C
CFB3C	ASIC200 second sheet DMA28		C
CFB3D	ASIC200 second sheet DMA29		C
CFB3E	ASIC200 second sheet DMA30		C
CFB3F	ASIC200 second sheet DMA31		C
CFB40	ASIC200 third sheet DMA00		C
CFB41	ASIC200 third sheet DMA01		C
CFB42	ASIC200 third sheet DMA02		C
CFB43	ASIC200 third sheet DMA03		C
CFB44	ASIC200 third sheet DMA04		C
CFB45	ASIC200 third sheet DMA05		C
CFB46	ASIC200 third sheet DMA06		C
CFB47	ASIC200 third sheet DMA07		C
CFB48	ASIC200 third sheet DMA08		C
CFB49	ASIC200 third sheet DMA09		C
CFB4A	ASIC200 third sheet DMA10		C
CFB4B	ASIC200 third sheet DMA11		C
CFB4C	ASIC200 third sheet DMA12		C
CFB4D	ASIC200 third sheet DMA13		C
CFB4E	ASIC200 third sheet DMA14		C
CFB4F	ASIC200 third sheet DMA15		C
CFB50	ASIC200 third sheet DMA16		C
CFB51	ASIC200 third sheet DMA17		C
CFB52	ASIC200 third sheet DMA18		C
CFB53	ASIC200 third sheet DMA19		C
CFB54	ASIC200 third sheet DMA20		C
CFB55	ASIC200 third sheet DMA21		C

Code	Item	Relevant electrical components, units, and options	Rank
CFB56	ASIC200 third sheet DMA22	• MFP board (MFPB)	C
CFB57	ASIC200 third sheet DMA23		C
CFB58	ASIC200 third sheet DMA24		C
CFB59	ASIC200 third sheet DMA25		C
CFB5A	ASIC200 third sheet DMA26		C
CFB5B	ASIC200 third sheet DMA27		C
CFB5C	ASIC200 third sheet DMA28		C
CFB5D	ASIC200 third sheet DMA29		C
CFB5E	ASIC200 third sheet DMA30		C
CFB5F	ASIC200 third sheet DMA31		C
CFB60	ASIC7 DMA A		C
CFB71	ASIC200 second sheet interruption		C
CFB72	ASIC200 third sheet interruption		C
CFB80	ASIC200 first sheet common register setting		C
CFB81	ASIC200 second sheet common register setting		C
CFB82	ASIC200 third sheet common register setting		C
CFBA0	ASIC200 first sheet BTC compression/extension unit		C
CFBA1	ASIC200 second sheet BTC compression/extension unit		C
CFBA2	ASIC200 third sheet BTC compression/extension unit		C
CFC00	ASIC200 first sheet DMA00 error interruption		C
CFC01	ASIC200 first sheet DMA01 error interruption		C
CFC02	ASIC200 first sheet DMA02 error interruption		C
CFC03	ASIC200 first sheet DMA03 error interruption		C
CFC04	ASIC200 first sheet DMA04 error interruption		C
CFC05	ASIC200 first sheet DMA05 error interruption		C
CFC06	ASIC200 first sheet DMA06 error interruption		C
CFC07	ASIC200 first sheet DMA07 error interruption		C
CFC08	ASIC200 first sheet DMA08 error interruption		C
CFC09	ASIC200 first sheet DMA09 error interruption		C
CFC0A	ASIC200 first sheet DMA10 error interruption		C
CFC0B	ASIC200 first sheet DMA11 error interruption		C
CFC0C	ASIC200 first sheet DMA12 error interruption		C
CFC0D	ASIC200 first sheet DMA13 error interruption		C
CFC0E	ASIC200 first sheet DMA14 error interruption		C
CFC0F	ASIC200 first sheet DMA15 error interruption		C
CFC10	ASIC200 first sheet DMA16 error interruption		C
CFC11	ASIC200 first sheet DMA17 error interruption		C
CFC12	ASIC200 first sheet DMA18 error interruption		C
CFC13	ASIC200 first sheet DMA19 error interruption		C
CFC14	ASIC200 first sheet DMA20 error interruption		C

Code	Item	Relevant electrical components, units, and options	Rank
CFC15	ASIC200 first sheet DMA21 error interruption	• MFP board (MFPB)	C
CFC16	ASIC200 first sheet DMA22 error interruption		C
CFC17	ASIC200 first sheet DMA23 error interruption		C
CFC18	ASIC200 first sheet DMA24 error interruption		C
CFC19	ASIC200 first sheet DMA25 error interruption		C
CFC1A	ASIC200 first sheet DMA26 error interruption		C
CFC1B	ASIC200 first sheet DMA27 error interruption		C
CFC1C	ASIC200 first sheet DMA28 error interruption		C
CFC1D	ASIC200 first sheet DMA29 error interruption		C
CFC1E	ASIC200 first sheet DMA30 error interruption		C
CFC1F	ASIC200 first sheet DMA31 error interruption		C
CFC20	ASIC200 watchdog timer error interruption		C
CFC21	ASIC200 first sheet image output interface 1 had underrun		C
CFC22	ASIC200 first sheet image input interface had overflow		C
CFC23	ASIC200 first sheet LCD output interface had underrun		C
CFC24	ASIC200 first sheet JBIG core detected unknown marker		C
CFC25	ASIC200 first sheet JBIG core detected SC count overflow		C
CFC26	ASIC200 first sheet SDC slave illegal access error occurred		C
CFC27	ASIC200 first sheet memory master access had Completer Abort		C
CFC28	ASIC200 first sheet memory master access had Unsupported Request		C
CFC29	ASIC200 first sheet memory master access had Completion Timeout		C
CFC2A	ASIC200 first sheet memory master access had Poisoned TLP		C
CFC2B	ASIC200 first sheet memory target access had Unsupported Request		C
CFC2C	ASIC200 first sheet memory target access had Poisoned TLP		C
CFC2D	ASIC200 first sheet config target access had Unsupported Request		C
CFC2E	ASIC200 first sheet config target access had Poisoned TLP		C
CFC30	ASIC200 second sheet DMA00 error interruption		C
CFC31	ASIC200 second sheet DMA01 error interruption		C
CFC32	ASIC200 second sheet DMA02 error interruption		C

Code	Item	Relevant electrical components, units, and options	Rank
CFC33	ASIC200 second sheet DMA03 error interruption	• MFP board (MFPB)	C
CFC34	ASIC200 second sheet DMA04 error interruption		C
CFC35	ASIC200 second sheet DMA05 error interruption		C
CFC36	ASIC200 second sheet DMA06 error interruption		C
CFC37	ASIC200 second sheet DMA07 error interruption		C
CFC38	ASIC200 second sheet DMA08 error interruption		C
CFC39	ASIC200 second sheet DMA09 error interruption		C
CFC3A	ASIC200 second sheet DMA10 error interruption		C
CFC3B	ASIC200 second sheet DMA11 error interruption		C
CFC3C	ASIC200 second sheet DMA12 error interruption		C
CFC3D	ASIC200 second sheet DMA13 error interruption		C
CFC3E	ASIC200 second sheet DMA14 error interruption		C
CFC3F	ASIC200 second sheet DMA15 error interruption		C
CFC40	ASIC200 second sheet DMA16 error interruption		C
CFC41	ASIC200 second sheet DMA17 error interruption		C
CFC42	ASIC200 second sheet DMA18 error interruption		C
CFC43	ASIC200 second sheet DMA19 error interruption		C
CFC44	ASIC200 second sheet DMA20 error interruption		C
CFC45	ASIC200 second sheet DMA21 error interruption		C
CFC46	ASIC200 second sheet DMA22 error interruption		C
CFC47	ASIC200 second sheet DMA23 error interruption		C
CFC48	ASIC200 second sheet DMA24 error interruption		C
CFC49	ASIC200 second sheet DMA25 error interruption		C
CFC4A	ASIC200 second sheet DMA26 error interruption		C
CFC4B	ASIC200 second sheet DMA27 error interruption		C
CFC4C	ASIC200 second sheet DMA28 error interruption		C
CFC4D	ASIC200 second sheet DMA29 error interruption		C
CFC4E	ASIC200 second sheet DMA30 error interruption		C
CFC4F	ASIC200 second sheet DMA31 error interruption		C
CFC50	ASIC200 second sheet watchdog time error interruption		C
CFC51	ASIC200 second sheet image output interface 1 had underrun		C
CFC52	ASIC200 second sheet image input interface had overflow		C
CFC53	ASIC200 second sheet LCD output interface had underrun		C
CFC54	ASIC200 second sheet JBIG core detected unknown marker		C
CFC55	ASIC200 second sheet JBIG core detected SC counter overflow		C

Code	Item	Relevant electrical components, units, and options	Rank
CFC56	ASIC200 second sheet SDC slave had illegal access error	• MFP board (MFPB)	C
CFC57	ASIC200 second sheet memory master access had Completer Abort		C
CFC58	ASIC200 second sheet memory master access had Unsupported Request		C
CFC59	ASIC200 second sheet memory master access had Completion Timeout		C
CFC5A	ASIC200 second sheet memory master access had Poisoned TLP		C
CFC5B	ASIC200 second sheet memory target access had Unsupported Request		C
CFC5C	ASIC200 second sheet memory target access had Poisoned TLP occurred		C
CFC5D	ASIC200 second sheet config target access had Unsupported Request		C
CFC5E	ASIC200 second sheet config target access had Poisoned TLP		C
CFC60	ASIC200 third sheet DMA00 error interruption		C
CFC61	ASIC200 third sheet DMA01 error interruption		C
CFC62	ASIC200 third sheet DMA02 error interruption		C
CFC63	ASIC200 third sheet DMA03 error interruption		C
CFC64	ASIC200 third sheet DMA04 error interruption		C
CFC65	ASIC200 third sheet DMA05 error interruption		C
CFC66	ASIC200 third sheet DMA06 error interruption		C
CFC67	ASIC200 third sheet DMA07 error interruption		C
CFC68	ASIC200 third sheet DMA08 error interruption		C
CFC69	ASIC200 third sheet DMA09 error interruption		C
CFC6A	ASIC200 third sheet DMA10 error interruption		C
CFC6B	ASIC200 third sheet DMA11 error interruption		C
CFC6C	ASIC200 third sheet DMA12 error interruption		C
CFC6D	ASIC200 third sheet DMA13 error interruption		C
CFC6E	ASIC200 third sheet DMA14 error interruption		C
CFC6F	ASIC200 third sheet DMA15 error interruption		C
CFC70	ASIC200 third sheet DMA16 error interruption		C
CFC71	ASIC200 third sheet DMA17 error interruption		C
CFC72	ASIC200 third sheet DMA18 error interruption		C
CFC73	ASIC200 third sheet DMA19 error interruption		C
CFC74	ASIC200 third sheet DMA20 error interruption		C
CFC75	ASIC200 third sheet DMA21 error interruption		C
CFC76	ASIC200 third sheet DMA22 error interruption		C
CFC77	ASIC200 third sheet DMA23 error interruption		C
CFC78	ASIC200 third sheet DMA24 error interruption		C

Code	Item	Relevant electrical components, units, and options	Rank
CFC79	ASIC200 third sheet DMA25 error interruption	• MFP board (MFPB)	C
CFC7A	ASIC200 third sheet DMA26 error interruption		C
CFC7B	ASIC200 third sheet DMA27 error interruption		C
CFC7C	ASIC200 third sheet DMA28 error interruption		C
CFC7D	ASIC200 third sheet DMA29 error interruption		C
CFC7E	ASIC200 third sheet DMA30 error interruption		C
CFC7F	ASIC200 third sheet DMA31 error interruption		C
CFC80	ASIC200 third sheet watchdog timer error interruption		C
CFC81	ASIC200 third sheet image output interface 1 had underrun		C
CFC82	ASIC200 third sheet image input interface had overflow		C
CFC83	ASIC200 third sheet LCD output interface had underrun		C
CFC84	ASIC200 third sheet JBIG core detected unknown marker		C
CFC85	ASIC200 third sheet JBIG core had SC count overflow		C
CFC86	ASIC200 third sheet SDC slave had illegal access error		C
CFC87	ASIC200 third sheet memory master access had Completer Abort		C
CFC88	ASIC200 third sheet memory master access had Unsupported Request		C
CFC89	ASIC200 third sheet memory master access had Completion Timeout		C
CFC8A	ASIC200 third sheet memory master access had Poisoned TLP		C
CFC8B	ASIC200 third sheet memory target access had Unsupported Request		C
CFC8C	ASIC200 third sheet memory target access had Poisoned TLP		C
CFC8D	ASIC200 third sheet config target access had Unsupported Request		C
CFC8E	ASIC200 third sheet config target access had Poisoned TLP		C
CFCC4	CPS2007 slave read data parity error occurred		C
CFCD0	PIC2007 PCI slave illegal access error occurred		C
CFCD1	PIC2007 address parity error occurred		C
CFCD2	PIC2007 slave write data parity error occurred		C
CFCD3	PIC2007 slave read data parity error occurred		C
CFCE0	ASIC22 watchdog timer error occurred		C
CFCE1	ASIC22 local bus error occurred		C
CFCE2	ASIC22 another type of error occurred		C

Code	Item	Relevant electrical components, units, and options	Rank
CFD00	ASIC200 first sheet DMA00 time out	• MFP board (MFPB)	C
CFD01	ASIC200 first sheet DMA01 time out		C
CFD02	ASIC200 first sheet DMA02 time out		C
CFD03	ASIC200 first sheet DMA03 time out		C
CFD04	ASIC200 first sheet DMA04 time out		C
CFD05	ASIC200 first sheet DMA05 time out		C
CFD06	ASIC200 first sheet DMA06 time out		C
CFD07	ASIC200 first sheet DMA07 time out		C
CFD08	ASIC200 first sheet DMA08 time out		C
CFD09	ASIC200 first sheet DMA09 time out		C
CFD0A	ASIC200 first sheet DMA10 time out		C
CFD10	ASIC200 first sheet DMA16 time out		C
CFD11	ASIC200 first sheet DMA17 time out		C
CFD12	ASIC200 first sheet DMA18 time out		C
CFD13	ASIC200 first sheet DMA19 time out		C
CFD14	ASIC200 first sheet DMA20 time out		C
CFD15	ASIC200 first sheet DMA21 time out		C
CFD16	ASIC200 first sheet DMA22 time out		C
CFD17	ASIC200 first sheet DMA23 time out		C
CFD18	ASIC200 first sheet DMA24 time out		C
CFD19	ASIC200 first sheet DMA25 time out		C
CFD1A	ASIC200 first sheet DMA26 time out		C
CFD1B	ASIC200 first sheet DMA27 time out		C
CFD1C	ASIC200 first sheet DMA28 time out		C
CFD1D	ASIC200 first sheet DMA29 time out		C
CFD1E	ASIC200 first sheet DMA30 time out		C
CFD1F	ASIC200 first sheet DMA31 time out		C
CFD20	ASIC200 second sheet DMA00 time out		C
CFD21	ASIC200 second sheet DMA01 time out		C
CFD22	ASIC200 second sheet DMA02 time out		C
CFD23	ASIC200 second sheet DMA03 time out		C
CFD24	ASIC200 second sheet DMA04 time out		C
CFD25	ASIC200 second sheet DMA05 time out		C
CFD26	ASIC200 second sheet DMA06 time out		C
CFD27	ASIC200 second sheet DMA07 time out		C
CFD28	ASIC200 second sheet DMA08 time out		C
CFD29	ASIC200 second sheet DMA09 time out		C
CFD2A	ASIC200 second sheet DMA10 time out		C
CFD2B	ASIC200 second sheet DMA11 time out		C
CFD2C	ASIC200 second sheet DMA12 time out		C
CFD2D	ASIC200 second sheet DMA13 time out		C

Code	Item	Relevant electrical components, units, and options	Rank
CFD2E	ASIC200 second sheet DMA14 time out	• MFP board (MFPB)	C
CFD2F	ASIC200 second sheet DMA15 time out		C
CFD30	ASIC200 second sheet DMA16 time out		C
CFD31	ASIC200 second sheet DMA17 time out		C
CFD32	ASIC200 second sheet DMA18 time out		C
CFD33	ASIC200 second sheet DMA19 time out		C
CFD34	ASIC200 second sheet DMA20 time out		C
CFD35	ASIC200 second sheet DMA21 time out		C
CFD36	ASIC200 second sheet DMA22 time out		C
CFD37	ASIC200 second sheet DMA23 time out		C
CFD38	ASIC200 second sheet DMA24 time out		C
CFD39	ASIC200 second sheet DMA25 time out		C
CFD3A	ASIC200 second sheet DMA26 time out		C
CFD3B	ASIC200 second sheet DMA27 time out		C
CFD3C	ASIC200 second sheet DMA28 time out		C
CFD3D	ASIC200 second sheet DMA29 time out		C
CFD3E	ASIC200 second sheet DMA30 time out		C
CFD3F	ASIC200 second sheet DMA31 time out		C
CFD40	ASIC200 third sheet DMA00 time out		C
CFD41	ASIC200 third sheet DMA01 time out		C
CFD42	ASIC200 third sheet DMA02 time out		C
CFD43	ASIC200 third sheet DMA03 time out		C
CFD44	ASIC200 third sheet DMA04 time out		C
CFD45	ASIC200 third sheet DMA05 time out		C
CFD46	ASIC200 third sheet DMA06 time out		C
CFD47	ASIC200 third sheet DMA07 time out		C
CFD48	ASIC200 third sheet DMA08 time out		C
CFD49	ASIC200 third sheet DMA09 time out		C
CFD4A	ASIC200 third sheet DMA10 time out		C
CFD4B	ASIC200 third sheet DMA11 time out		C
CFD4C	ASIC200 third sheet DMA12 time out		C
CFD4D	ASIC200 third sheet DMA13 time out		C
CFD4E	ASIC200 third sheet DMA14 time out		C
CFD4F	ASIC200 third sheet DMA15 time out		C
CFD50	ASIC200 third sheet DMA16 time out		C
CFD51	ASIC200 third sheet DMA17 time out		C
CFD52	ASIC200 third sheet DMA18 time out		C
CFD53	ASIC200 third sheet DMA19 time out		C
CFD54	ASIC200 third sheet DMA20 time out		C
CFD55	ASIC200 third sheet DMA21 time out		C
CFD56	ASIC200 third sheet DMA22 time out		C

Code	Item	Relevant electrical components, units, and options	Rank
CFD57	ASIC200 third sheet DMA23 time out	• MFP board (MFPB)	C
CFD58	ASIC200 third sheet DMA24 time out		C
CFD59	ASIC200 third sheet DMA25 time out		C
CFD5A	ASIC200 third sheet DMA26 time out		C
CFD5B	ASIC200 third sheet DMA27 time out		C
CFD5C	ASIC200 third sheet DMA28 time out		C
CFD5D	ASIC200 third sheet DMA29 time out		C
CFD5E	ASIC200 third sheet DMA30 time out		C
CFD5F	ASIC200 third sheet DMA31 time out		C
CFDA0	ASIC7 DMA_A time out		C
CFDA1	ASIC7 DMA_C time out		C
CFDA2	ASIC7 DMA_D time out		C
CFE00	ASIC200 first sheet DMA00 time out		C
CFE01	ASIC200 first sheet DMA01 time out		C
CFE02	ASIC200 first sheet DMA02 time out		C
CFE03	ASIC200 first sheet DMA03 time out		C
CFE04	ASIC200 first sheet DMA04 time out		C
CFE05	ASIC200 first sheet DMA05 time out		C
CFE06	ASIC200 first sheet DMA06 time out		C
CFE07	ASIC200 first sheet DMA07 time out		C
CFE08	ASIC200 first sheet DMA08 time out		C
CFE09	ASIC200 first sheet DMA09 time out		C
CFE0A	ASIC200 first sheet DMA10 time out		C
CFE0B	ASIC200 first sheet DMA11 time out		C
CFE0C	ASIC200 first sheet DMA12 time out		C
CFE0D	ASIC200 first sheet DMA13 time out		C
CFE0E	ASIC200 first sheet DMA14 time out		C
CFE0F	ASIC200 first sheet DMA15 time out		C
CFE10	ASIC200 first sheet DMA16 time out		C
CFE11	ASIC200 first sheet DMA17 time out		C
CFE12	ASIC200 first sheet DMA18 time out		C
CFE13	ASIC200 first sheet DMA19 time out		C
CFE14	ASIC200 first sheet DMA20 time out		C
CFE15	ASIC200 first sheet DMA21 time out		C
CFE16	ASIC200 first sheet DMA22 time out		C
CFE17	ASIC200 first sheet DMA23 time out		C
CFE18	ASIC200 first sheet DMA24 time out		C
CFE19	ASIC200 first sheet DMA25 time out		C
CFE1A	ASIC200 first sheet DMA26 time out		C
CFE1B	ASIC200 first sheet DMA27 time out		C
CFE1C	ASIC200 first sheet DMA28 time out		C

Code	Item	Relevant electrical components, units, and options	Rank
CFE1D	ASIC200 first sheet DMA29 time out	• MFP board (MFPB)	C
CFE1E	ASIC200 first sheet DMA30 time out		C
CFE1F	ASIC200 first sheet DMA31 time out		C
CFE20	ASIC200 second sheet DMA00 time out		C
CFE21	ASIC200 second sheet DMA01 time out		C
CFE22	ASIC200 second sheet DMA02 time out		C
CFE23	ASIC200 second sheet DMA03 time out		C
CFE24	ASIC200 second sheet DMA04 time out		C
CFE25	ASIC200 second sheet DMA05 time out		C
CFE26	ASIC200 second sheet DMA06 time out		C
CFE27	ASIC200 second sheet DMA07 time out		C
CFE28	ASIC200 second sheet DMA08 time out		C
CFE29	ASIC200 second sheet DMA09 time out		C
CFE2A	ASIC200 second sheet DMA10 time out		C
CFE2B	ASIC200 second sheet DMA11 time out		C
CFE2C	ASIC200 second sheet DMA12 time out		C
CFE2D	ASIC200 second sheet DMA13 time out		C
CFE2E	ASIC200 second sheet DMA14 time out		C
CFE2F	ASIC200 second sheet DMA15 time out		C
CFE30	ASIC200 second sheet DMA16 time out		C
CFE31	ASIC200 second sheet DMA17 time out		C
CFE32	ASIC200 second sheet DMA18 time out		C
CFE33	ASIC200 second sheet DMA19 time out		C
CFE34	ASIC200 second sheet DMA20 time out		C
CFE35	ASIC200 second sheet DMA21 time out		C
CFE36	ASIC200 second sheet DMA22 time out		C
CFE37	ASIC200 second sheet DMA23 time out		C
CFE38	ASIC200 second sheet DMA24 time out		C
CFE39	ASIC200 second sheet DMA25 time out		C
CFE3A	ASIC200 second sheet DMA26 time out		C
CFE3B	ASIC200 second sheet DMA27 time out		C
CFE3C	ASIC200 second sheet DMA28 time out		C
CFE3D	ASIC200 second sheet DMA29 time out		C
CFE3E	ASIC200 second sheet DMA30 time out		C
CFE3F	ASIC200 second sheet DMA31 time out		C
CFE40	ASIC200 third sheet DMA00 time out		C
CFE41	ASIC200 third sheet DMA01 time out		C
CFE42	ASIC200 third sheet DMA02 time out		C
CFE43	ASIC200 third sheet DMA03 time out		C
CFE44	ASIC200 third sheet DMA04 time out		C
CFE45	ASIC200 third sheet DMA05 time out		C

Code	Item	Relevant electrical components, units, and options	Rank
CFE46	ASIC200 third sheet DMA06 time out	• MFP board (MFPB)	C
CFE47	ASIC200 third sheet DMA07 time out		C
CFE48	ASIC200 third sheet DMA08 time out		C
CFE49	ASIC200 third sheet DMA09 time out		C
CFE4A	ASIC200 third sheet DMA10 time out		C
CFE4B	ASIC200 third sheet DMA11 time out		C
CFE4C	ASIC200 third sheet DMA12 time out		C
CFE4D	ASIC200 third sheet DMA13 time out		C
CFE4E	ASIC200 third sheet DMA14 time out		C
CFE4F	ASIC200 third sheet DMA15 time out		C
CFE50	ASIC200 third sheet DMA16 time out		C
CFE51	ASIC200 third sheet DMA17 time out		C
CFE52	ASIC200 third sheet DMA18 time out		C
CFE53	ASIC200 third sheet DMA19 time out		C
CFE54	ASIC200 third sheet DMA20 time out		C
CFE55	ASIC200 third sheet DMA21 time out		C
CFE56	ASIC200 third sheet DMA22 time out		C
CFE57	ASIC200 third sheet DMA23 time out		C
CFE58	ASIC200 third sheet DMA24 time out		C
CFE59	ASIC200 third sheet DMA25 time out		C
CFE5A	ASIC200 third sheet DMA26 time out		C
CFE5B	ASIC200 third sheet DMA27 time out		C
CFE5C	ASIC200 third sheet DMA28 time out		C
CFE5D	ASIC200 third sheet DMA29 time out		C
CFE5E	ASIC200 third sheet DMA30 time out		C
CFE5F	ASIC200 third sheet DMA31 time out		C
CFF00	ASIC200 first sheet DMA00 time out		C
CFF01	ASIC200 first sheet DMA01 time out		C
CFF02	ASIC200 first sheet DMA02 time out		C
CFF03	ASIC200 first sheet DMA03 time out		C
CFF04	ASIC200 first sheet DMA04 time out		C
CFF05	ASIC200 first sheet DMA05 time out		C
CFF06	ASIC200 first sheet DMA06 time out		C
CFF07	ASIC200 first sheet DMA07 time out		C
CFF08	ASIC200 first sheet DMA08 time out		C
CFF09	ASIC200 first sheet DMA09 time out		C
CFF0A	ASIC200 first sheet DMA10 time out		C
CFF0B	ASIC200 first sheet DMA11 time out		C
CFF0C	ASIC200 first sheet DMA12 time out		C
CFF0D	ASIC200 first sheet DMA13 time out		C
CFF0E	ASIC200 first sheet DMA14 time out		C

Code	Item	Relevant electrical components, units, and options	Rank
CFF0F	ASIC200 first sheet DMA15 time out	• MFP board (MFPB)	C
CFF10	ASIC200 first sheet DMA16 time out		C
CFF11	ASIC200 first sheet DMA17 time out		C
CFF12	ASIC200 first sheet DMA18 time out		C
CFF13	ASIC200 first sheet DMA19 time out		C
CFF14	ASIC200 first sheet DMA20 time out		C
CFF15	ASIC200 first sheet DMA21 time out		C
CFF16	ASIC200 first sheet DMA22 time out		C
CFF17	ASIC200 first sheet DMA23 time out		C
CFF18	ASIC200 first sheet DMA24 time out		C
CFF19	ASIC200 first sheet DMA25 time out		C
CFF1A	ASIC200 first sheet DMA26 time out		C
CFF1B	ASIC200 first sheet DMA27 time out		C
CFF1C	ASIC200 first sheet DMA28 time out		C
CFF1D	ASIC200 first sheet DMA29 time out		C
CFF1E	ASIC200 first sheet DMA30 time out		C
CFF1F	ASIC200 first sheet DMA31 time out		C
CFF20	ASIC200 second sheet DMA00 time out		C
CFF21	ASIC200 second sheet DMA01 time out		C
CFF22	ASIC200 second sheet DMA02 time out		C
CFF23	ASIC200 second sheet DMA03 time out		C
CFF24	ASIC200 second sheet DMA04 time out		C
CFF25	ASIC200 second sheet DMA05 time out		C
CFF26	ASIC200 second sheet DMA06 time out		C
CFF27	ASIC200 second sheet DMA07 time out		C
CFF28	ASIC200 second sheet DMA08 time out		C
CFF29	ASIC200 second sheet DMA09 time out		C
CFF2A	ASIC200 second sheet DMA10 time out		C
CFF2B	ASIC200 second sheet DMA11 time out		C
CFF2C	ASIC200 second sheet DMA12 time out		C
CFF2D	ASIC200 second sheet DMA13 time out		C
CFF2E	ASIC200 second sheet DMA14 time out		C
CFF2F	ASIC200 second sheet DMA15 time out		C
CFF30	ASIC200 second sheet DMA16 time out		C
CFF31	ASIC200 second sheet DMA17 time out		C
CFF32	ASIC200 second sheet DMA18 time out		C
CFF33	ASIC200 second sheet DMA19 time out		C
CFF34	ASIC200 second sheet DMA20 time out		C
CFF35	ASIC200 second sheet DMA21 time out		C
CFF36	ASIC200 second sheet DMA22 time out		C
CFF37	ASIC200 second sheet DMA23 time out		C

Code	Item	Relevant electrical components, units, and options	Rank
CFF38	ASIC200 second sheet DMA24 time out	• MFP board (MFPB)	C
CFF39	ASIC200 second sheet DMA25 time out		C
CFF3A	ASIC200 second sheet DMA26 time out		C
CFF3B	ASIC200 second sheet DMA27 time out		C
CFF3C	ASIC200 second sheet DMA28 time out		C
CFF3D	ASIC200 second sheet DMA29 time out		C
CFF3E	ASIC200 second sheet DMA30 time out		C
CFF3F	ASIC200 second sheet DMA31 time out		C
CFF40	ASIC200 third sheet DMA00 time out		C
CFF41	ASIC200 third sheet DMA01 time out		C
CFF42	ASIC200 third sheet DMA02 time out		C
CFF43	ASIC200 third sheet DMA03 time out		C
CFF44	ASIC200 third sheet DMA04 time out		C
CFF45	ASIC200 third sheet DMA05 time out		C
CFF46	ASIC200 third sheet DMA06 time out		C
CFF47	ASIC200 third sheet DMA07 time out		C
CFF48	ASIC200 third sheet DMA08 time out		C
CFF49	ASIC200 third sheet DMA09 time out		C
CFF4A	ASIC200 third sheet DMA10 time out		C
CFF4B	ASIC200 third sheet DMA11 time out		C
CFF4C	ASIC200 third sheet DMA12 time out		C
CFF4D	ASIC200 third sheet DMA13 time out		C
CFF4E	ASIC200 third sheet DMA14 time out		C
CFF4F	ASIC200 third sheet DMA15 time out		C
CFF50	ASIC200 third sheet DMA16 time out		C
CFF51	ASIC200 third sheet DMA17 time out		C
CFF52	ASIC200 third sheet DMA18 time out		C
CFF53	ASIC200 third sheet DMA19 time out		C
CFF54	ASIC200 third sheet DMA20 time out		C
CFF55	ASIC200 third sheet DMA21 time out		C
CFF56	ASIC200 third sheet DMA22 time out		C
CFF57	ASIC200 third sheet DMA23 time out		C
CFF58	ASIC200 third sheet DMA24 time out		C
CFF59	ASIC200 third sheet DMA25 time out		C
CFF5A	ASIC200 third sheet DMA26 time out		C
CFF5B	ASIC200 third sheet DMA27 time out		C
CFF5C	ASIC200 third sheet DMA28 time out		C
CFF5D	ASIC200 third sheet DMA29 time out		C
CFF5E	ASIC200 third sheet DMA30 time out		C

19.5 Solution

19.5.1 C0104: Tray 3/4 feeder transportation motor failure to turn

19.5.2 C0105: Tray 3/4 feeder transportation motor turning at abnormal timing

Relevant parts	
Transport motor (M25)	Paper feed/transport drive board (PFTDB) Printer control board (PRCB)

Step	Action	WIRING DIAGRAM	
		Control signal	Location (Electrical component)
1	Check the M25 connector for proper connection and correct as necessary.	—	—
2	Check the connector of M25 for proper drive coupling and correct as necessary.	—	—
3	M25 operation check	PFTDB CN13-6 (LOCK)	X-11
4	Change M25	—	—
⚠1 5	PFTDB ICP6 conduction check	—	—
6	Change PFTDB	—	—
7	Change PRCB	—	—

19.5.3 C0202: Tray 1 feeder up/down abnormality

Relevant parts	
Tray 1 upper limit sensor (PS6) Tray 1 lift-up motor (M6)	Paper feed/transport drive board (PFTDB) Printer control board (PRCB)

Step	Action	WIRING DIAGRAM	
		Control signal	Location (Electrical component)
1	Check the M6 connector for proper connection and correct as necessary.	—	—
2	Check the connector of M6 for proper drive coupling and correct as necessary.	—	—
3	PS6 I/O check, sensor check	PFTDB CN11-3 (ON)	Q-1
4	M6 operation check	PFTDB CN23-9 to 10	X-3
5	Change M6	—	—
6	Change PFTDB	—	—
7	Change PRCB	—	—

19.5.4 C0204: Tray 2 feeder up/down abnormality

Relevant parts	
Tray 2 upper limit sensor (PS14) Tray 2 lift-up motor (M8)	Paper feed/transport drive board (PFTDB) Printer control board (PRCB)

Step	Action	WIRING DIAGRAM	
		Control signal	Location (Electrical component)
1	Check the M8 connector for proper connection and correct as necessary.	—	—
2	Check the connector of M8 for proper drive coupling and correct as necessary.	—	—
3	PS14 I/O check, sensor check	PFTDB CN10<B>-10 (ON)	Q-4
4	M8 operation check	PFTDB CN22-9 to 10	X-4
5	Change M8	—	—
6	Change PFTDB	—	—
7	Change PRCB	—	—

19.5.5 C0206: Tray 3 feeder up/down abnormality

Relevant parts	
Tray 3 upper limit sensor (PS22) Tray 3 lift-up motor (M23)	Paper feed/transport drive board (PFTDB) Printer control board (PRCB)

Step	Action	WIRING DIAGRAM	
		Control signal	Location (Electrical component)
1	Check the M23 connector for proper connection and correct as necessary.	—	—
2	Check the connector of M23 for proper drive coupling and correct as necessary.	—	—
3	PS22 I/O check, sensor check	PFTDB CN16-6 (ON)	X-6
4	M23 operation check	PFTDB CN14-3 to 4	X-9
5	Change M23	—	—
6	Change PFTDB	—	—
7	Change PRCB	—	—

19.5.6 C0208: Tray 4 feeder up/down abnormality

Relevant parts	
Tray 4 upper limit sensor (PS27) Tray 4 lift-up motor (M24)	Paper feed/transport drive board (PFTDB) Printer control board (PRCB)

Step	Action	WIRING DIAGRAM	
		Control signal	Location (Electrical component)
1	Check the M24 connector for proper connection and correct as necessary.	—	—
2	Check the connector of M24 for proper drive coupling and correct as necessary.	—	—
3	PS27 I/O check, sensor check	PFTDB CN18-6 (ON)	X-8
4	M24 operation check	PFTDB CN14-1 to 2	X-9
5	Change M23	—	—
6	Change PFTDB	—	—
7	Change PRCB	—	—

19.5.7 C0216: LCT up/down abnormality

Relevant parts	
Upper limit sensor (PS2) Lift-up motor (M1)	LU drive board (LUDB)

Step	Action	WIRING DIAGRAM	
		Control signal	Location (Electrical component)
1	Check the M1 connector for proper connection and correct as necessary.	—	—
2	Check the connector of M1 for proper drive coupling and correct as necessary.	—	—
3	PS2 I/O check, sensor check	LUDB CN5-3 (ON)	LU-204 G-4
4	M1 operation check	LUDB CN3-4 (ON)	LU-204 G-3
5	Change M1	—	—
⚠1 6	LUDB ICP2 conduction check	—	—
7	Change LUDB	—	—

19.5.8 C0301: Suction fan motor's failure to turn

Relevant parts	
⚠1 Suction fan motor (FM1)	Paper feed/transport drive board (PFTDB)

Step	Action	WIRING DIAGRAM	
		Control signal	Location (Electrical component)
1	Check the FM1 connector for proper connection and correct as necessary.	—	—
2	Check the fan for possible overload and correct as necessary.	—	—
3	FM1 operation check	PFTDB CN5-3 (REM) PFTDB CN5-5 (LOCK)	Q-6
4	Change FM1	—	—
⚠1 5	PFTDB ICP2 conduction check	—	—
⚠1 6	Change PFTDB	—	—

19.5.9 C0351: Paper cooling fan trouble

Relevant parts	
Paper cooling fan motor (FM13)	Printer control board (PRCB)

Step	Action	WIRING DIAGRAM	
		Control signal	Location (Electrical component)
1	Check the FM13 connector for proper connection and correct as necessary.	—	—
2	Check the fan for possible overload and correct as necessary.	—	—
3	FM13 operation check	PRCB CN15-7 (REM) PRCB CN15-9 (LOCK)	K-7
4	Change FM13	—	—
⚠1 5	PRCB ICP6 conduction check	—	—
6	Change PRCB	—	—

19.5.10 C1003: PK communication error

Relevant parts	
Punch control board (PKDB)	FS control board (FSCB)

Step	Action	WIRING DIAGRAM	
		Control signal	Location (Electrical component)
1	Disconnect and then connect the power cord. Turn OFF the main power switch, wait for 10 sec. or more, and turn ON the main power switch.	—	—
2	Rewrite the firmware.	—	—
3	Change PKDB	—	—
4	Change FSCB	—	—

19.5.11 C1004: FNS communication error

Relevant parts	
FS control board (FSCB)	

Step	Action	WIRING DIAGRAM	
		Control signal	Location (Electrical component)
1	Disconnect and then connect the power cord. Turn OFF the main power switch, wait for 10 sec. or more, and turn ON the main power switch.	—	—
2	Rewrite the firmware.	—	—
3	JSCB F1 conduction check	—	—
4	JSCB F2 conduction check	—	—
5	Change FSCB	—	—

19.5.12 C1005: ZU communication error

Relevant parts	
ZU control board (ZUCB)	

Step	Action	WIRING DIAGRAM	
		Control signal	Location (Electrical component)
1	Disconnect and then connect the power cord. Turn OFF the main power switch, wait for 10 sec. or more, and turn ON the main power switch.	—	—
2	Rewrite the firmware.	—	—
3	Change ZUCB	—	—

19.5.13 C1081: SD communication error

Relevant parts	
SD drive board (SDDB) FS control board (FSCB)	

Step	Action	WIRING DIAGRAM	
		Control signal	Location (Electrical component)
1	Disconnect and then connect the power cord. Turn OFF the main power switch, wait for 10 sec. or more, and turn ON the main power switch.	—	—
2	Rewrite the firmware.	—	—
3	Change SDDB	—	—
4	Change FSCB	—	—

19.5.14 C1102: Main tray Up/Down motor malfunction

Relevant parts	
Main tray lift motor (M5) Main tray top surface sensor (PS4) Staple paper exit top surface sensor (PS7)	FS control board (FSCB)

Step	Action	WIRING DIAGRAM	
		Control signal	Location (Electrical component)
1	Check the motor and sensor connectors for proper connection, and correct as necessary.	—	—
2	Check the connector of M5 for proper drive coupling, and correct as necessary.	—	—
3	PS4 I/O check, sensor check	FSCB CN20<B>-18 (ON)	FS-526 L-14
4	PS7 I/O check, sensor check	FSCB CN20<B>-15 (ON)	FS-526 L-14
5	M5 operation check	FSCB CN22-1 to 11	FS-526 K-5
6	Change M5	—	—
7	FSCB ICP1 conduction check	—	—
8	Change FSCB	—	—

19.5.15 C1103: Side-staple front adjust drive motor malfunction

Relevant parts	
Alignment plate motor/F (M11) 2 staples alignment motor home sensor/F (PS17)	FS control board (FSCB)

Step	Action	WIRING DIAGRAM	
		Control signal	Location (Electrical component)
1	Check the motor and sensor connectors for proper connection, and correct as necessary.	—	—
2	Check the connector of M11 for proper drive coupling, and correct as necessary.	—	—
3	PS17 I/O check, sensor check	FSCB CN20<A>-6 (ON)	FS-526 L-11
4	M1 operation check	FSCB CN19-1 to 4	FS-526 D-13
5	Change M1	—	—
⚠1 6	FSCB ICP4 conduction check	—	—
7	Change FSCB	—	—

19.5.16 C1104: Paper exit roller drive motor malfunction

Relevant parts	
Exit roller motor (M4)	FS control board (FSCB)

Step	Action	WIRING DIAGRAM	
		Control signal	Location (Electrical component)
1	Check the motor and sensor connectors for proper connection, and correct as necessary.	—	—
2	Check the connector of M4 for proper drive coupling, and correct as necessary.	—	—
3	M4 operation check	FSCB CN18-3 to 10	FS-526 D-12
4	Change M4	—	—
⚠1 5	FSCB ICP2 conduction check	—	—
6	Change FSCB	—	—

19.5.17 C1105: Paper exit auxiliary roller motor malfunction

Relevant parts	
Paper output roller motor (M6) Paper output roller home sensor (PS10)	FS control board (FSCB)

Step	Action	WIRING DIAGRAM	
		Control signal	Location (Electrical component)
1	Check the motor and sensor connectors for proper connection, and correct as necessary.	—	—
2	Check the connector of M6 for proper drive coupling, and correct as necessary.	—	—
3	PS10 I/O check, sensor check	FSCB CN21<A>-9 (ON)	FS-526 L-7
4	M6 operation check	FSCB CN13-1 to 6	FS-526 D-5
5	Change M6	—	—
⚠1 6	FSCB ICP6 conduction check	—	—
7	Change FSCB	—	—

19.5.18 C1106: Side-staple stapler drive malfunction

Relevant parts	
2 staples stapler movement motor (M13) Stapler position sensor/1 (PS50) Stapler position sensor/2 (PS51) Stapler position sensor/3 (PS52) Stapler position sensor/4 (PS53)	FS control board (FSCB)

Step	Action	WIRING DIAGRAM	
		Control signal	Location (Electrical component)
1	Check the motor and sensor connectors for proper connection, and correct as necessary.	—	—
2	Check the connector of M13 for proper drive coupling, and correct as necessary.	—	—
3	PS50 I/O check, sensor check	FSCB CN20<B>-3 (ON)	FS-526 L-13
4	PS51 I/O check, sensor check	FSCB CN20<B>-6 (ON)	FS-526 L-13
5	PS52 I/O check, sensor check	FSCB CN20<B>-9 (ON)	FS-526 L-13 to 14
6	PS53 I/O check, sensor check	FSCB CN20<B>-12 (ON)	FS-526 L-14
7	M13 operation check	FSCB CN15-3 to 8	FS-526 D-11 to 12
8	Change M13	—	—
⚠1 9	FSCB ICP5 conduction check	—	—
10	Change FSCB	—	—

19.5.19 C1109: Side-staple stapler motor drive malfunction

Relevant parts	
2 staples stapler motor (M14) Stapler unit	FS control board (FSCB)

Step	Action	WIRING DIAGRAM	
		Control signal	Location (Electrical component)
1	Check the motor and sensor connectors for proper connection, and correct as necessary.	—	—
2	Check the connector of M14 for proper drive coupling, and correct as necessary.	—	—
3	Change stapler unit	—	—
4	M14 operation check	—	—
5	Change M14	—	—
6	FSCB ICP10 conduction check	—	—
7	FSCB ICP11 conduction check	—	—
8	Change FSCB	—	—

19.5.20 C1110: Center-staple head roller motor malfunction

Relevant parts	
Staple motor (M24) Stapler home sensor (PS33)	SD drive board (SDDB) FS control board (FSCB)

Step	Action	WIRING DIAGRAM	
		Control signal	Location (Electrical component)
1	Check the motor and sensor connectors for proper connection, and correct as necessary.	—	—
2	Check the connector of M24 for proper drive coupling, and correct as necessary.	—	—
3	PS33 I/O check, sensor check	SDDB CN403-17 (ON)	SD-508 C-10
4	M24 operation check	SDDB CN406<B>-1 to 2	SD-508 K-9 to 10
5	Change M24	—	—
6	SDDB ICP7 conduction check	—	—
7	Change SDDB	—	—
8	Change FSCB	—	—

19.5.21 C1112: Center-staple clinch roller motor malfunction

Relevant parts	
Clincher motor (M25) Stapler home sensor (PS33)	SD drive board (SDDB) FS control board (FSCB)

Step	Action	WIRING DIAGRAM	
		Control signal	Location (Electrical component)
1	Check the motor and sensor connectors for proper connection, and correct as necessary.	—	—
2	Check the connector of M25 for proper drive coupling, and correct as necessary.	—	—
3	PS33 I/O check, sensor check	SDDB CN403-17 (ON)	SD-508 C-10
4	M25 operation check	SDDB CN405-4 to 10	SD-508 C-7
5	Change M25	—	—
6	SDDB ICP6 conduction check	—	—
7	Change SDDB	—	—
8	Change FSCB	—	—

19.5.22 C1113: Center-staple lead edge stopper motor malfunction

(1) When FS-526+SD-508 is installed

Relevant parts	
Leading edge stopper motor (M22) Leading edge stopper home sensor (PS32)	SD drive board (SDDB) FS control board (FSCB)

Step	Action	WIRING DIAGRAM	
		Control signal	Location (Electrical component)
1	Check the motor and sensor connectors for proper connection, and correct as necessary.	—	—
2	Check the connector of M23 for proper drive coupling, and correct as necessary.	—	—
3	PS32 I/O check, sensor check	SDDB CN407-8 (ON)	SD-508 K-7
4	M22 operation check	SDDB CN408<A>-1 to 6 (ON)	SD-508 K-6
5	Change M22	—	—
6	SDDB ICP2 conduction check	—	—
7	Change SDDB	—	—
8	Change FSCB	—	—

(2) When FS-527+SD-509 is installed

Relevant parts	
Leading edge stopper motor (M20) Leading edge stopper home sensor (PS45)	SD drive board (SDDB) FS control board (FSCB)

Step	Action	WIRING DIAGRAM	
		Control signal	Location (Electrical component)
1	Check the motor and sensor connectors for proper connection, and correct as necessary.	—	—
2	Check the connector of M20 for proper drive coupling, and correct as necessary.	—	—
3	PS45 I/O check, sensor check	SDDB PJ10-3 (ON)	SD-509 G-6
4	M20 operation check	SDDB PJ8-1 to 4	SD-509 B-5
5	Change M20	—	—
6	Change SDDB	—	—
7	Change FSCB	—	—

19.5.23 C1114: Center-staple front adjust drive motor malfunction

(1) When FS-526+SD-508 is installed

Relevant parts	
Center staple alignment motor /F (M20) Center staple alignment motor home sensor/F (PS30)	SD drive board (SDDB) FS control board (FSCB)

Step	Action	WIRING DIAGRAM	
		Control signal	Location (Electrical component)
1	Check the motor and sensor connectors for proper connection, and correct as necessary.	—	—
2	Check the connector of M20 for proper drive coupling, and correct as necessary.	—	—
3	PS30 I/O check, sensor check	SDDB CN403-14 (ON)	SD-508 C-9
4	M20 operation check	SDDB CN403-1 to 4	SD-508 C-8
5	Change M20	—	—
6	SDDB ICP4 conduction check	—	—
7	Change SDDB	—	—
8	Change FSCB	—	—

(2) When FS-527+SD-509 is installed

Relevant parts	
Center staple alignment motor/F (M24) Center staple alignment home sensor/F (PS42)	SD drive board (SDDB) FS control board (FSCB)

Step	Action	WIRING DIAGRAM	
		Control signal	Location (Electrical component)
1	Check the motor and sensor connectors for proper connection, and correct as necessary.	—	—
2	Check the connector of M24 for proper drive coupling, and correct as necessary.	—	—
3	PS42 I/O check, sensor check	SDDB PJ9-6 (ON)	SD-509 G-2
4	M24 operation check	SDDB PK7-1 to 4	SD-509 G-3
5	Change M24	—	—
6	Change SDDB	—	—
7	Change FSCB	—	—

19.5.24 C1115: Center-staple knife drive motor malfunction

(1) When FS-526+SD-508 is installed

Relevant parts	
Center fold knife motor (M32) Center fold knife home sensor (PS34)	SD drive board (SDDB) FS control board (FSCB)

Step	Action	WIRING DIAGRAM	
		Control signal	Location (Electrical component)
1	Check the motor and sensor connectors for proper connection, and correct as necessary.	—	—
2	Check the connector of M32 for proper drive coupling, and correct as necessary.	—	—
3	PS34 I/O check, sensor check	SDDB CN407-3 (ON)	SD-508 K-6
4	M32 operation check	SDDB CN411-1 to 2	SD-508 K-8
5	Change M32	—	—
6	SDDB ICP8 conduction check	—	—
7	Change SDDB	—	—
8	Change FSCB	—	—

(2) When FS-527+SD-509 is installed

Relevant parts	
Center fold plate motor (M26) Center fold plate home sensor (PS47)	SD drive board (SDDB) FS control board (FSCB)

Step	Action	WIRING DIAGRAM	
		Control signal	Location (Electrical component)
1	Check the motor and sensor connectors for proper connection, and correct as necessary.	—	—
2	Check the connector of M26 for proper drive coupling, and correct as necessary.	—	—
3	PS47 I/O check, sensor check	SDDB PJ10-6 (ON)	SD-509 G-6
4	M26 operation check	SDDB PJ2-1 (CW) SDDB PJ2-3 (CCW)	SD-509 B-4
5	Change M26	—	—
6	Change SDDB	—	—
7	Change FSCB	—	—

19.5.25 C1116: Center-staple transfer motor malfunction

(1) When FS-526+SD-508 is installed

Relevant parts	
Transport motor (M33)	SD drive board (SDDB) FS control board (FSCB)

Step	Action	WIRING DIAGRAM	
		Control signal	Location (Electrical component)
1	Check the motor and sensor connectors for proper connection, and correct as necessary.	—	—
2	Check the connector of M33 for proper drive coupling, and correct as necessary.	—	—
3	M33 operation check	SDDB CN409-1 to 11	SD-508 K-5
4	Change M33	—	—
5	SDDB ICP5 conduction check	—	—
6	Change SDDB	—	—
7	Change FSCB	—	—

(2) When FS-527+SD-509 is installed

Relevant parts	
Center fold roller motor (M25)	SD drive board (SDDB) FS control board (FSCB)

Step	Action	WIRING DIAGRAM	
		Control signal	Location (Electrical component)
1	Check the motor and sensor connectors for proper connection, and correct as necessary.	—	—
2	Check the connector of M25 for proper drive coupling, and correct as necessary.	—	—
3	M25 operation check	SDDB PJ4-1 to 11	SD-509 B-3
4	Change M25	—	—
5	Change SDDB	—	—
6	Change FSCB	—	—

19.5.26 C1124: Sheet feeder up/down drive failure (lower)

Relevant parts	
Tray lift motor /Lw (M202) Tray upper limit sensor /Lw (PS209) Tray lower limit sensor /Lw (PS210)	PI drive board (PIDB) FS control board (FSCB)

Step	Action	WIRING DIAGRAM	
		Control signal	Location (Electrical component)
1	Check the motor and sensor connectors for proper connection, and correct as necessary.	—	—
2	Check the connector of M202 for proper drive coupling, and correct as necessary.	—	—
3	PS209 I/O check, sensor check	PIDB CN53<A>-8 (ON)	PI-505 C to D-8
4	PS210 I/O check, sensor check	PIDB CN53<A>-11 (ON)	PI-505 C to D-9
5	M202 operation check	PIDB CN56-5 to 6	PI-505 C to D-7
6	Change M202	—	—
7	PIDB ICP2 conduction check	—	—
8	Change PIDB	—	—
9	Change FSCB	—	—

19.5.27 C1125: Sheet feeder up/down drive failure (upper)

Relevant parts	
Tray lift motor /Up (M201) Tray upper limit sensor /Up (PS204) Tray lower limit sensor /Up (PS205)	PI drive board (PIDB) FS control board (FSCB)

Step	Action	WIRING DIAGRAM	
		Control signal	Location (Electrical component)
1	Check the motor and sensor connectors for proper connection, and correct as necessary.	—	—
2	Check the connector of M201 for proper drive coupling, and correct as necessary.	—	—
3	PS204 I/O check, sensor check	PIDB CN55-8 (ON)	PI-505 C to D-5
4	PS205 I/O check, sensor check	PIDB CN55-7 (ON)	PI-505 C to D-6
5	M201 operation check	PIDB CN54-7 to 8	PI-505 C to D-4
6	Change M201	—	—
7	PIDB ICP2 conduction check	—	—
8	Change PIDB	—	—
9	Change FSCB	—	—

19.5.28 C1127: Punch shift motor drive malfunction

Relevant parts	
Punch drive motor (M301) PK punch home sensor (PS301)	Punch control board (PKDB) FS control board (FSCB)

Step	Action	WIRING DIAGRAM	
		Control signal	Location (Electrical component)
1	Check the motor and sensor connectors for proper connection, and correct as necessary.	—	—
2	Check the connector of M301 for proper drive coupling, and correct as necessary.	—	—
3	PS301 I/O check, sensor check	PKDB CN36-5 (ON)	PK-516 C-3
4	M301 operation check	PKDB CN35-1 to 3	PK-516 C-2
5	Change M301	—	—
6	PKDB ICP4 conduction check	—	—
7	Change PKDB	—	—
8	Change FSCB	—	—

⚠1 19.5.29 C1130: 1st stopper motor drive malfunction

Relevant parts	
1st stopper motor (M602) 1st folding stopper home sensor (PS603)	ZU control board (ZUCB)

Step	Action	WIRING DIAGRAM	
		Control signal	Location (Electrical component)
1	Check the motor and sensor connectors for proper connection, and correct as necessary.	—	—
2	Check the connector of M602 for proper drive coupling, and correct as necessary.	—	—
3	PS603 I/O check, sensor check	ZUCB CN4-11 (ON)	ZU-606 C-5
4	M602 operation check	ZUCB CN15-4 to 6	ZU-606 C-3
5	Change M602	—	—
6	ZUCB ICP7 conduction check	—	—
7	Change ZUCB	—	—

⚠1 19.5.30 C1131: 2nd folding stopper motor drive malfunction

Relevant parts	
2nd folding stopper motor (M603) 2nd folding stopper home sensor (PS604)	ZU control board (ZUCB)

Step	Action	WIRING DIAGRAM	
		Control signal	Location (Electrical component)
1	Check the motor and sensor connectors for proper connection, and correct as necessary.	—	—
2	Check the connector of M603 for proper drive coupling, and correct as necessary.	—	—
3	PS604 I/O check, sensor check	ZUCB CN4-5 (ON)	ZU-606 C-4 to 5
4	M603 operation check	ZUCB CN15-7 to 12	ZU-606 C-4
5	Change M603	—	—
6	ZUCB ICP6 conduction check	—	—
7	Change ZUCB	—	—

19.5.31 C1132: Output OP punch driving motor malfunction

Relevant parts	
Punch oscillating motor (M302) PK punch oscillating home sensor (PS303)	Punch control board (PKDB) FS control board (FSCB)

Step	Action	WIRING DIAGRAM	
		Control signal	Location (Electrical component)
1	Check the motor and sensor connectors for proper connection, and correct as necessary.	—	—
2	Check the connector of M302 for proper drive coupling, and correct as necessary.	—	—
3	PS303 I/O check, sensor check	PKDB CN37-2 (ON)	PK-516 C-5
4	M302 operation check	PKDB CN34-1 to 6	PK-516 C-5
5	Change M302	—	—
6	PKDB ICP1 conduction check	—	—
7	Change PKDB	—	—
8	Change FSCB	—	—

19.5.32 C1133: Punch shift motor drive malfunction

Relevant parts	
Punch shift motor (M605) Punch shift home sensor (PS605)	ZU control board (ZUCB)

Step	Action	WIRING DIAGRAM	
		Control signal	Location (Electrical component)
1	Check the motor and sensor connectors for proper connection, and correct as necessary.	—	—
2	Check the connector of M605 for proper drive coupling, and correct as necessary.	—	—
3	PS605 I/O check, sensor check	ZUCB CN3-2 (ON)	ZU-606 C-6
4	M605 operation check	ZUCB CN5-1 to 6	ZU-606 C-2
5	Change M605	—	—
6	ZUCB ICP5 conduction check	—	—
7	Change ZUCB	—	—

⚠1 19.5.33 C1134: Main motor cooling fan drive malfunction

Relevant parts	
Main motor cooling fan (FM601)	ZU control board (ZUCB)

Step	Action	WIRING DIAGRAM	
		Control signal	Location (Electrical component)
1	Check the motor connectors for proper connection, and correct as necessary.	—	—
2	Check the connector of FM601 for proper drive coupling, and correct as necessary.	—	—
3	FM601 operation check	ZUCB CN11-11 (DRV)	ZU-606 C-8 to 9
4	Change FM601	—	—
5	ZUCB ICP8 conduction check	—	—
6	Change ZUCB	—	—

⚠1 19.5.34 C1135: Punch motor drive malfunction

Relevant parts	
Punch motor (M604)	ZU control board (ZUCB)

Step	Action	WIRING DIAGRAM	
		Control signal	Location (Electrical component)
1	Check the motor connectors for proper connection, and correct as necessary.	—	—
2	Check the connector of M604 for proper drive coupling, and correct as necessary.	—	—
3	M604 operation check	ZUCB CN11-2 (DRV)	ZU-606 C-7
4	Change M604	—	—
5	ZUCB ICP10 conduction check	—	—
6	Change ZUCB	—	—

19.5.35 C1136: Punch switchover motor drive malfunction

Relevant parts	
Punch switchover motor (M608) Punch switchover switch (MS601)	ZU control board (ZUCB)

Step	Action	WIRING DIAGRAM	
		Control signal	Location (Electrical component)
1	Check the motor and sensor connectors for proper connection, and correct as necessary.	—	—
2	Check the connector of M608 for proper drive coupling, and correct as necessary.	—	—
3	MS601 I/O check, sensor check	ZUCB CN11-9	ZU-606 C-8
4	M608 operation check	ZUCB CN11-8 (DRV)	C-7 to 8
5	Change M608	—	—
6	ZUCB ICP9 conduction check	—	—
7	Change ZUCB	—	—

19.5.36 C1140: Side-staple rear adjust drive motor malfunction

Relevant parts	
Alignment plate motor/R (M12) 2 staples alignment motor home sensor/R (PS18)	FS control board (FSCB)

Step	Action	WIRING DIAGRAM	
		Control signal	Location (Electrical component)
1	Check the motor and sensor connectors for proper connection, and correct as necessary.	—	—
2	Check the connector of M12 for proper drive coupling, and correct as necessary.	—	—
3	PS18 I/O check, sensor check	FSCB CN20<A>-3 (ON)	FS-526 L-11
4	M12 operation check	FSCB CN19-5 to 8	FS-526 D-13
5	Change M12	—	—
6	FSCB ICP4 conduction check	—	—
7	Change PKDB	—	—

19.5.37 C1141: Side-staple paddle roller motor malfunction

Relevant parts	
Paddle motor (M16)	FS control board (FSCB)

Step	Action	WIRING DIAGRAM	
		Control signal	Location (Electrical component)
1	Check the motor and sensor connectors for proper connection, and correct as necessary.	—	—
2	Check the connector of M16 for proper drive coupling, and correct as necessary.	—	—
3	M16 operation check	FSCB CN14<A>-1 to 7	FS-526 D-5
4	Change M16	—	—
1 5	FSCB ICP13 conduction check	—	—
6	Change FSCB	—	—

19.5.38 C1142: Side-staple trailing paddle up-down motor malfunction

Relevant parts	
Trail edge paddle motor (M15) Trail edge paddle home sensor (PS20)	FS control board (FSCB)

Step	Action	WIRING DIAGRAM	
		Control signal	Location (Electrical component)
1	Check the motor and sensor connectors for proper connection, and correct as necessary.	—	—
2	Check the connector of M15 for proper drive coupling, and correct as necessary.	—	—
3	PS20 I/O check, sensor check	FSCB CN21<A>-3 (ON)	FS-526 L-6 to 7
4	M15 operation check	FSCB CN14<A>-8 to 12	FS-526 D-5
5	Change M15	—	—
6	Change FSCB	—	—

19.5.39 C1143: Side-staple rewinding paddle up-down motor malfunction

Relevant parts	
Rewind paddle motor (M18) Rewind paddle home sensor (PS16)	FS control board (FSCB)

Step	Action	WIRING DIAGRAM	
		Control signal	Location (Electrical component)
1	Check the motor and sensor connectors for proper connection, and correct as necessary.	—	—
2	Check the connector of M18 for proper drive coupling, and correct as necessary.	—	—
3	PS16 I/O check, sensor check	FSCB CN21<A>-6 (ON)	FS-526 L-7
4	M8 operation check	FSCB CN14<B>-1 to 4	FS-526 D-6
5	Change M8	—	—
6	Change FSCB	—	—

19.5.40 C1144: Spare stacker board drive motor malfunction

Relevant parts	
Stacker plate motor (M17) Stacker plate home sensor (PS11)	FS control board (FSCB)

Step	Action	WIRING DIAGRAM	
		Control signal	Location (Electrical component)
1	Check the motor and sensor connectors for proper connection, and correct as necessary.	—	—
2	Check the connector of M17 for proper drive coupling, and correct as necessary.	—	—
3	PS11 I/O check, sensor check	FSCB CN20<A>-12 (ON)	FS-526 L-12
4	M17 operation check	FSCB CN18-1 to 2	FS-526 D-12
5	Change M17	—	—
⚠1 6	FSCB ICP9 conduction check	—	—
7	Change FSCB	—	—

19.5.41 C1145: End stopper drive motor malfunction

Relevant parts	
2 staples trail edge stopper motor (M19) 2 staples trail edge stopper home sensor (PS22) 2 staples trail edge stopper standby sensor/1 (PS23) 2 staples trail edge stopper standby sensor/2 (PS42)	FS control board (FSCB)

Step	Action	WIRING DIAGRAM	
		Control signal	Location (Electrical component)
1	Check the motor and sensor connectors for proper connection, and correct as necessary.	—	—
2	Check the connector of M19 for proper drive coupling, and correct as necessary.	—	—
3	PS22 I/O check, sensor check	FSCB CN20<A>-15 (ON)	FS-526 L-12
4	PS23 I/O check, sensor check	FSCB CN20<A>-18 (ON)	FS-526 L-12 to 13
5	PS42 I/O check	FSCB CN20<A>-9 (ON)	FS-526 L-12
6	M19 operation check	FSCB CN19-9 to 12	FS-526 D-13
7	Change M19	—	—
8	Change FSCB	—	—

19.5.42 C1150: Center-staple rear adjust drive motor malfunction

(1) When FS-526+SD-508 is installed

Relevant parts	
Center staple alignment motor /R (M21) Center staple alignment motor home sensor/R (PS31)	SD drive board (SDDB) FS control board (FSCB)

Step	Action	WIRING DIAGRAM	
		Control signal	Location (Electrical component)
1	Check the motor and sensor connectors for proper connection, and correct as necessary.	—	—
2	Check the connector of M21 for proper drive coupling, and correct as necessary.	—	—
3	PS31 I/O check, sensor check	SDDB CN403-14 (ON)	SD-508 C-9
4	M21 operation check	SDDB CN403-5 to 8	SD-508 C-9
5	Change M21	—	—
6	SDDB ICP4 conduction check	—	—
7	Change SDDB	—	—
8	Change FSCB	—	—

(2) When FS-527+SD-509 is installed

Relevant parts	
Center staple alignment motor/R (M23) Center staple alignment home sensor/R (PS41)	SD drive board (SDDB) FS control board (FSCB)

Step	Action	WIRING DIAGRAM	
		Control signal	Location (Electrical component)
1	Check the motor and sensor connectors for proper connection, and correct as necessary.	—	—
2	Check the connector of M23 for proper drive coupling, and correct as necessary.	—	—
3	PS41 I/O check, sensor check	SDDB PJ9-3 (ON)	SD-509 G-2
4	M23 operation check	SDDB P7-5 to 8	SD-509 G-2
5	Change M23	—	—
6	Change SDDB	—	—
7	Change FSCB	—	—

19.5.43 C1151: Center-staple stapler drive motor malfunction

Relevant parts	
Center staple motor (M23) Stapler home sensor (PS33)	SD drive board (SDDB) FS control board (FSCB)

Step	Action	WIRING DIAGRAM	
		Control signal	Location (Electrical component)
1	Check the motor and sensor connectors for proper connection, and correct as necessary.	—	—
2	Check the connector of M23 for proper drive coupling, and correct as necessary.	—	—
3	PS33 I/O check, sensor check	SDDB CN403-17 (ON)	SD-508 C-10
4	M23 operation check	SDDB CN406<A>-1 to 4 (ON)	SD-508 K-8
5	Change M23	—	—
6	SDDB ICP4 conduction check	—	—
7	Change SDDB	—	—
8	Change FSCB	—	—

19.5.44 C1152: Center-staple paper exit motor malfunction

Relevant parts	
Exit motor (M34)	SD drive board (SDDB) FS control board (FSCB)

Step	Action	WIRING DIAGRAM	
		Control signal	Location (Electrical component)
1	Check the motor and sensor connectors for proper connection, and correct as necessary.	—	—
2	Check the connector of M34 for proper drive coupling, and correct as necessary.	—	—
3	M34 operation check	—	SD-508 G-3 to 4
4	Change M34	—	—
1 5	SDDB ICP12 conduction check	—	—
6	Change SDDB	—	—
7	Change FSCB	—	—

19.5.45 C1153: Center-staple paddle up-down motor malfunction (trailing edge)

Relevant parts	
Center staple paddle lift motor/C (M26) Paddle home sensor/C (PS37)	SD drive board (SDDB) FS control board (FSCB)

Step	Action	WIRING DIAGRAM	
		Control signal	Location (Electrical component)
1	Check the motor and sensor connectors for proper connection, and correct as necessary.	—	—
2	Check the connector of M26 for proper drive coupling, and correct as necessary.	—	—
3	PS37 I/O check, sensor check	SDDB CN406<A>-11 (ON)	SD-508 K-9
4	M26 operation check	SDDB CN406<A>-5 to 8	SD-508 K-8
5	Change M26	—	—
1 6	SDDB ICP4 conduction check	—	—
7	Change SDDB	—	—
8	Change FSCB	—	—

19.5.46 C1156: Center-staple paddle roller motor malfunction (trailing edge)

(1) When FS-526+SD-508 is installed

Relevant parts	
Center staple paddle/T (M29)	SD drive board (SDDB) FS control board (FSCB)

Step	Action	WIRING DIAGRAM	
		Control signal	Location (Electrical component)
1	Check the motor and sensor connectors for proper connection, and correct as necessary.	—	—
2	Check the connector of M29 for proper drive coupling, and correct as necessary.	—	—
3	M29 operation check	SDDB CN404-1 to 5	SD-508 C-8
4	Change M29	—	—
⚠1 5	SDDB ICP5 conduction check	—	—
6	Change SDDB	—	—
7	Change FSCB	—	—

⚠1 (2) When FS-527+SD-509 is installed

Relevant parts	
Upper paddle motor (M21) Paper detection sensor/1 (PS43) Paper detection sensor/2 (PS44)	SD drive board (SDDB) FS control board (FSCB)

Step	Action	WIRING DIAGRAM	
		Control signal	Location (Electrical component)
1	Check the motor and sensor connectors for proper connection, and correct as necessary.	—	—
2	Check the connector of M21 for proper drive coupling, and correct as necessary.	—	—
3	PS43 I/O check, sensor check	SDDB PJ9-8 (ON)	SD-509 G-1
4	PS44 I/O check, sensor check	SDDB PJ13-2 (ON)	SD-509 G-3
5	M21 operation check	SDDB PJ5-6 to 10	SD-509 B-3
6	Change M21	—	—
7	Change SDDB	—	—
8	Change FSCB	—	—

19.5.47 C1157: Center-staple paddle roller motor malfunction (middle)

Relevant parts	
Center staple paddle/C (M30)	SD drive board (SDDB) FS control board (FSCB)

Step	Action	WIRING DIAGRAM	
		Control signal	Location (Electrical component)
1	Check the motor and sensor connectors for proper connection, and correct as necessary.	—	—
2	Check the connector of M30 for proper drive coupling, and correct as necessary.	—	—
3	M30 operation check	SDDB CN406<B>-11 to 15	SD-508 K-10
4	Change M30	—	—
5	SDDB ICP5 conduction check	—	—
6	Change SDDB	—	—
7	Change FSCB	—	—

19.5.48 C1182: Shift motor drive malfunction

(1) When JS-504 is installed

Relevant parts	
Shift motor (M2) Shift home sensor (PS6)	JS control board (JSCB)

Step	Action	WIRING DIAGRAM	
		Control signal	Location (Electrical component)
1	Check the motor and sensor connectors for proper connection, and correct as necessary.	—	—
2	Check the connector of M2 for proper drive coupling, and correct as necessary.	—	—
3	PS6 I/O check, sensor check	JSCB PJ7JSCB-18 (ON)	JS-504 F-3
4	M2 operation check	JSCB PJ4JSCB-1 to 4	JS-504 F-6
5	Change M2	—	—
6	JSCB F6 conduction check	—	—
7	Change JSCB	—	—

(2) When FS-527 is installed

Relevant parts	
Tray2 shift motor (M16) Tray2 shift home sensor (PS25)	FS control board (FSCB)

Step	Action	WIRING DIAGRAM	
		Control signal	Location (Electrical component)
1	Check the motor and sensor connectors for proper connection, and correct as necessary.	—	—
2	Check the connector of M16 for proper drive coupling, and correct as necessary.	—	—
3	PS25 I/O check, sensor check	FSCB PJ21-6 (ON)	FS-527 J-3
4	M16 operation check	FSCB PJ5-5 (REM)	FS-527 B to C-9
5	Change M16	—	—
6	Change FSCB	—	—

19.5.49 C1183: Elevate drive malfunction

Relevant parts	
Elevate motor (M15) Tray1 lower position sensor (PS21) Tray1 upper position sensor (PS24) Tray1 upper position switch (SW2) Tray1 lower position switch (SW3)	FS control board (FSCB)

Step	Action	WIRING DIAGRAM	
		Control signal	Location (Electrical component)
1	Check the motor and sensor connectors for proper connection, and correct as necessary.	—	—
2	Check the connector of M15 for proper drive coupling, and correct as necessary.	—	—
3	PS21 I/O check, sensor check	FSCB PJ21-3 (ON)	FS-527 J-3
4	PS24 I/O check, sensor check	FSCB PJ16-9 (ON)	FS-527 J-4
5	SW2 I/O check, sensor check	FSCB PJ3-2 (ON)	FS-527 B to C-10
6	SW3 I/O check, sensor check	FSCB PJ3-2 (ON)	FS-527 B to C-10
7	M15 operation check	FSCB PJ4-1 to 11	FS-527 B to C-4
8	Change M15	—	—
9	Change FSCB	—	—

⚠1 19.5.50 C1190: Alignment plate motor drive malfunction

Relevant parts	
Alignment plate motor (M13) Alignment plate home sensor (PS17)	FS control board (FSCB)

Step	Action	WIRING DIAGRAM	
		Control signal	Location (Electrical component)
1	Check the motor and sensor connectors for proper connection, and correct as necessary.	—	—
2	Check the connector of M13 for proper drive coupling, and correct as necessary.	—	—
3	PS17 I/O check, sensor check	FSCB PJ17-3 (ON)	FS-527 B to C-8
4	M13 operation check	FSCB PJ8-1 to 4	FS-527 B to C-7
5	Change M13	—	—
6	Change FSCB	—	—

⚠1 19.5.51 C1194: Leading edge stopper motor drive malfunction

Relevant parts	
Leading edge stopper motor (M14) Leading edge stopper home sensor (PS20)	FS control board (FSCB)

Step	Action	WIRING DIAGRAM	
		Control signal	Location (Electrical component)
1	Check the motor and sensor connectors for proper connection, and correct as necessary.	—	—
2	Check the connector of M13 for proper drive coupling, and correct as necessary.	—	—
3	PS17 I/O check, sensor check	FSCB PJ17-6 (ON)	FS-527 B to C-8
4	M13 operation check	FSCB PJ8-9 to 12	FS-527 B to C-6
5	Change M13	—	—
6	Change FSCB	—	—

⚠1 19.5.52 C11A1: Tray 2 exit roller pressure/ retraction malfunction

Relevant parts	
Exit roller retraction motor (M9) Exit roller pressure sensor (PS12)	FS control board (FSCB)

Step	Action	WIRING DIAGRAM	
		Control signal	Location (Electrical component)
1	Check the motor and sensor connectors for proper connection, and correct as necessary.	—	—
2	Check the connector of M9 for proper drive coupling, and correct as necessary.	—	—
3	PS12 I/O check, sensor check	FSCB PJ16-12 (ON)	FS-527 J-4
4	M9 operation check	FSCB PJ9-5 (REM)	FS-527 J-1
5	Change M9	—	—
6	Change FSCB	—	—

⚠1 19.5.53 C11A2: Accommodation roller pressure/ retraction malfunction

Relevant parts	
Accommodation roller retraction motor (M10) Accommodation roller pressure sensor (PS13)	FS control board (FSCB)

Step	Action	WIRING DIAGRAM	
		Control signal	Location (Electrical component)
1	Check the motor and sensor connectors for proper connection, and correct as necessary.	—	—
2	Check the connector of M10 for proper drive coupling, and correct as necessary.	—	—
3	PS13 I/O check, sensor check	FSCB PJ16-15 (ON)	FS-527 J-3
4	M10 operation check	FSCB PJ9-8 (REM)	FS-527 J-1
5	Change M10	—	—
6	Change FSCB	—	—

⚠1 19.5.54 C11A7: Tray 3 exit roller pressure/ retraction malfunction

Relevant parts	
Tray3 exit roller retraction motor (M17) Tray3 exit roller retraction sensor (PS35)	FS control board (FSCB)

Step	Action	WIRING DIAGRAM	
		Control signal	Location (Electrical component)
1	Check the motor and sensor connectors for proper connection, and correct as necessary.	—	—
2	Check the connector of M17 for proper drive coupling, and correct as necessary.	—	—
3	PS35 I/O check, sensor check	FSCB PJ12-6 (ON)	FS-527 (JS-603) L-10
4	M17 operation check	FSCB PJ30-2 (REM)	FS-527 (JS-603) L-9
5	Change M17	—	—
6	Change FSCB	—	—

⚠1 19.5.55 C11B0: Stapler movement drive malfunction

Relevant parts	
Stapler movement motor (M11) Stapler home sensor/1 (PS18) Stapler home sensor/2 (PS19)	FS control board (FSCB)

Step	Action	WIRING DIAGRAM	
		Control signal	Location (Electrical component)
1	Check the motor and sensor connectors for proper connection, and correct as necessary.	—	—
2	Check the connector of M11 for proper drive coupling, and correct as necessary.	—	—
3	PS18 I/O check, sensor check	FSCB PJ17-12 (ON)	FS-527 B to C-7
4	PS19 I/O check, sensor check	FSCB PJ17-15 (ON)	FS-527 B to C-7
5	M11 operation check	FSCB PJ8-5 to 8	FS-527 B to C-6
6	Change M11	—	—
7	Change FSCB	—	—

⚠1 19.5.56 C11B2: Staple drive malfunction

Relevant parts	
Stapler unit	FS control board (FSCB)

Step	Action	WIRING DIAGRAM	
		Control signal	Location (Electrical component)
1	Check the motor and sensor connectors for proper connection, and correct as necessary.	—	—
2	Change stapler unit	—	—
3	Change FSCB	—	—

⚠1 19.5.57 C11B5: Saddle stapler drive malfunction

Relevant parts	
Saddle stapler unit	SD drive board (SDDB) FS control board (FSCB)

Step	Action	WIRING DIAGRAM	
		Control signal	Location (Electrical component)
1	Check the motor and sensor connectors for proper connection, and correct as necessary.	—	—
2	Change saddle stapler unit	—	—
3	Change SDDB	—	—
3	Change FSCB	—	—

19.5.58 C11C0: Punch motor drive malfunction

Relevant parts	
Punch motor/1 (M100) Punch home sensor/1 (PS100)	FS control board (FSCB)

Step	Action	WIRING DIAGRAM	
		Control signal	Location (Electrical component)
1	Check the motor and sensor connectors for proper connection, and correct as necessary.	—	—
2	Check the connector of M100 for proper drive coupling, and correct as necessary.	—	—
3	PS100 I/O check, sensor check	FSCB PJ19-8 (ON)	FS-527 (PK-517) J-9
4	M100 operation check	FSCB PJ19-1 (CW) FSCB PJ19-3 (CCW)	FS-527 (PK-517) J-8
5	Change M100	—	—
6	Change FSCB	—	—

19.5.59 C11E0: Duplex path switching motor drive malfunction / Finisher route change malfunction

(1) When FS-527 is installed

Relevant parts	
Duplex path switching motor (M2) Duplex path switching sensor (PS3)	FS control board (FSCB)

Step	Action	WIRING DIAGRAM	
		Control signal	Location (Electrical component)
1	Check the motor and sensor connectors for proper connection, and correct as necessary.	—	—
2	Check the connector of M2 for proper drive coupling, and correct as necessary.	—	—
3	PS3 I/O check, sensor check	FSCB PJ11-6 (ON)	FS-527 I-11
4	M2 operation check	FSCB PJ29-1 to 3	FS-527 I-12
5	Change M2	—	—
6	Change FSCB	—	—

(2) When JS-504 is installed

Relevant parts	
Route change motor (M3) Route change home sensor (PS4)	JS control board (JSCB)

Step	Action	WIRING DIAGRAM	
		Control signal	Location (Electrical component)
1	Check the motor and sensor connectors for proper connection, and correct as necessary.	—	—
2	Check the connector of M3 for proper drive coupling, and correct as necessary.	—	—
3	PS4 I/O check, sensor check	JSCB PJ7JSCB-15 (ON)	JS-504 F-4
4	M3 operation check	JSCB PJ6JSCB-1 to 2	JS-504 F-6
5	Change M3	—	—
6	Change JSCB	—	—

19.5.60 C11E1: Upper lower path switching motor drive malfunction

Relevant parts	
Upper lower path switching motor (M6) Upper lower path switching sensor (PS26)	FS control board (FSCB)

Step	Action	WIRING DIAGRAM	
		Control signal	Location (Electrical component)
1	Check the motor and sensor connectors for proper connection, and correct as necessary.	—	—
2	Check the connector of M6 for proper drive coupling, and correct as necessary.	—	—
3	PS26 I/O check, sensor check	FSCB PJ21-9 (ON)	FS-527 J-2
4	M6 operation check	FSCB PJ9-1 (REM)	FS-527 J-2
5	Change M6	—	—
6	Change FSCB	—	—

19.5.61 C11E2: Tray1 path switching motor drive malfunction

Relevant parts	
Tray1 path switching motor (M8) Tray1 path switching home sensor (PS7)	FS control board (FSCB)

Step	Action	WIRING DIAGRAM	
		Control signal	Location (Electrical component)
1	Check the motor and sensor connectors for proper connection, and correct as necessary.	—	—
2	Check the connector of M8 for proper drive coupling, and correct as necessary.	—	—
3	PS7 I/O check, sensor check	FSCB PJ16-3 (ON)	FS-527 J-5
4	M8 operation check	FSCB PJ9-4 (REM)	FS-527 J-2
5	Change M8	—	—
6	Change FSCB	—	—

19.5.62 C2101: PC charge cleaning malfunction

Relevant parts	
Drum unit /K Charging cleaner home sensor (PS43) Charging cleaner return sensor (PS44) Charge cleaning motor/K (M15)	Printer control board (PRCB)

Step	Action	WIRING DIAGRAM	
		Control signal	Location (Electrical component)
1	Check the drum unit/K for proper connection and correct as necessary.	—	—
2	Check the M15 connector for proper connection and correct as necessary.	—	—
3	PS43 I/O check, sensor check	PRCB CN25-11 (ON)	C-12
4	PS44 I/O check, sensor check	PRCB CN25-14 (ON)	C-12
5	M15 operation check	PRCB CN8-1 to 2	C-12
6	Change drum unit /K	—	—
7	Change M15	—	—
8	Change PRCB	—	—

19.5.63 C2151: Secondary transfer roller pressure welding alienation

Relevant parts	
Pressure welding alienation sensor (PS50) 2nd image transfer pressure retraction motor (M3)	Printer control board (PRCB)

Step	Action	WIRING DIAGRAM	
		Control signal	Location (Electrical component)
1	Check the M3 connector for proper connection and correct as necessary.	—	—
2	PS50 I/O check, sensor check	PFTDB CN4-9 (ON)	Q-5
3	M3 operation check	PFTDB CN5-3 (REM)	Q-6
4	Change M3	—	—
5	Change PRCB	—	—

19.5.64 C2152: Transfer belt pressure welding alienation

Relevant parts	
Pressure welding alienation sensor/K (PS51) Pressure welding alienation sensor/color (PS52) 1st image transfer pressure retraction motor (M21)	Printer control board (PRCB)

Step	Action	WIRING DIAGRAM	
		Control signal	Location (Electrical component)
1	Check the M21 connector for proper connection and correct as necessary.	—	—
2	PS51 I/O check, sensor check	PRCB CN21-1 (ON)	C-23
3	PS52 I/O check, sensor check	PRCB CN21-4 (ON)	C-23
4	M21 operation check	PRCB CN20-1 to 4	K-6
5	Change M21	—	—
⚠1 6	PRCB ICP4 conduction check	—	—
7	Change MFPB	—	—

19.5.65 C2160: PC charge (C) malfunction

19.5.66 C2161: PC charge (M) malfunction

19.5.67 C2162: PC charge (Y) malfunction

19.5.68 C2163: PC charge (K) malfunction

19.5.69 C2164: PC charge malfunction

Relevant parts	
Imaging unit	High voltage unit/1 (HV1) Printer control board (PRCB)

Step	Action	WIRING DIAGRAM	
		Control signal	Location (Electrical component)
1	Check the imaging unit for proper connection and correct as necessary.	—	—
2	Check the HV1 connector for proper connection and correct as necessary.	—	—
3	Check the PRCB connector for proper connection and correct as necessary.	—	—
4	Change IU	—	—
5	Change HV1	—	—
6	Change PRCB	—	—

19.5.70 C2204: Waste toner agitating motor's failure to turn

Relevant parts	
Waste toner agitating motor lock sensor (PS23) Waste toner agitating motor (M20)	Printer control board (PRCB)

Step	Action	WIRING DIAGRAM	
		Control signal	Location (Electrical component)
1	Clean the PS23 if it has toner or paper dust, etc.	—	—
2	Change the waste toner box.	—	—
3	Check the M20 connector for proper connection and correct as necessary.	—	—
4	Check the connector of motor for proper drive coupling and correct as necessary.	—	—
5	M20 operation check	PRCB CN23-1 to 4	C-8 to 9
6	Change M20	—	—
7	PRCB ICP3 conduction check	—	—
8	Change PRCB	—	—

19.5.71 C2253: Color PC drum motor's failure to turn

19.5.72 C2254: Color PC drum motor's turning at abnormal timing

Relevant parts	
Color PC drum motor (M16)	Printer control board (PRCB)

Step	Action	WIRING DIAGRAM	
		Control signal	Location (Electrical component)
1	Check the M16 connector for proper connection and correct as necessary.	—	—
2	Check the M16 connector for proper drive coupling and correct as necessary.	—	—
3	Check the PRCB connector for proper connection and correct as necessary.	—	—
4	M16 operation check	PRCB CN34-8 (REM) PRCB CN34-11 (LOCK)	K-1
5	Change M16	—	—
⚠1 6	PRCB ICP13 conduction check	—	—
7	Change PRCB	—	—

19.5.73 C2255: Color developing motor's failure to turn

19.5.74 C2256: Color developing motor's turning at abnormal timing

Relevant parts	
Color developing motor (M17)	Printer control board (PRCB)

Step	Action	WIRING DIAGRAM	
		Control signal	Location (Electrical component)
1	Check the M17 connector for proper connection and correct as necessary.	—	—
2	Check the M17 connector for proper drive coupling and correct as necessary.	—	—
3	Check the PRCB connector for proper connection and correct as necessary.	—	—
4	M17 operation check	PRCB CN34-13 (REM) PRCB CN34-16 (LOCK)	K-1
5	Change M17	—	—
⚠1 6	PRCB ICP13 conduction check	—	—
7	Change PRCB	—	—

19.5.75 C2257: Cleaner motor's failure to turn

19.5.76 C2258: Cleaner motor's turning at abnormal timing

Relevant parts	
Cleaner motor (M38)	Printer control board (PRCB)

Step	Action	WIRING DIAGRAM	
		Control signal	Location (Electrical component)
1	Check the M38 connector for proper connection and correct as necessary.	—	—
2	Check the M38 connector for proper drive coupling and correct as necessary.	—	—
3	Check the PRCB connector for proper connection and correct as necessary.	—	—
4	M38 operation check	PRCB CN2-3 (REM) PRCB CN2-6 (LOCK)	K-11
5	Change M38	—	—
6	PRCB ICP18 conduction check	—	—
7	Change PRCB	—	—

19.5.77 C2259: K developing motor's failure to turn

19.5.78 C225A: K developing motor's turning at abnormal timing

Relevant parts	
K developing motor (M19)	Printer control board (PRCB)

Step	Action	WIRING DIAGRAM	
		Control signal	Location (Electrical component)
1	Check the M19 connector for proper connection and correct as necessary.	—	—
2	Check the M19 connector for proper drive coupling and correct as necessary.	—	—
3	Check the PRCB connector for proper connection and correct as necessary.	—	—
4	M19 operation check	PRCB CN34-1 (REM) PRCB CN34-4 (LOCK)	K-2
5	Change M19	—	—
6	PRCB ICP14 conduction check	—	—
7	Change PRCB	—	—

19.5.79 C225B: K PC drum motor's failure to turn

19.5.80 C225C: K PC drum motor's turning at abnormal timing

Relevant parts	
K PC drum motor (M18)	Printer control board (PRCB)

Step	Action	WIRING DIAGRAM	
		Control signal	Location (Electrical component)
1	Check the M18 connector for proper connection and correct as necessary.	—	—
2	Check the M18 connector for proper drive coupling and correct as necessary.	—	—
3	Check the PRCB connector for proper connection and correct as necessary.	—	—
4	M18 operation check	PRCB CN35-10 (REM) PRCB CN35-13 (LOCK)	K-2
5	Change M18	—	—
⚠1 6	PRCB ICP14 conduction check	—	—
7	Change PRCB	—	—

19.5.81 C2350: Toner suction fan motor's failure to turn

Relevant parts	
Toner suction fan motor (FM7)	Printer control board (PRCB)

Step	Action	WIRING DIAGRAM	
		Control signal	Location (Electrical component)
1	Check the FM8 connector for proper connection and correct as necessary.	—	—
2	Check the fan for possible overload and correct as necessary.	—	—
3	FM7 operation check	PRCB CN15-1 (REM) PRCB CN15-3 (LOCK)	K-8
4	Change FM7	—	—
⚠1 5	PRCB ICP6 conduction check	—	—
6	Change PRCB	—	—

19.5.82 C2353: IU cooling fan motor's failure to turn

Relevant parts	
IU cooling fan motor (FM15)	PH relay board (REYB/PH) Printer control board (PRCB)

Step	Action	WIRING DIAGRAM	
		Control signal	Location (Electrical component)
1	Check the FM15 connector for proper connection and correct as necessary.	—	—
2	Check the fan for possible overload and correct as necessary.	—	—
3	FM15 operation check	REYB/PH CN5-1 (REM) REYB/PH CN5-3 (LOCK)	A to B-6
4	Change FM15	—	—
1 5	REYB/PH ICP1 conduction check	—	—
6	Change REYB/PH	—	—
7	Change PRCB	—	—

19.5.83 C2354: Rear side cooling fan motor's failure to turn

Relevant parts	
Rear side cooling fan motor (FM16)	Printer control board (PRCB)

Step	Action	WIRING DIAGRAM	
		Control signal	Location (Electrical component)
1	Check the FM16 connector for proper connection and correct as necessary.	—	—
2	Check the fan for possible overload and correct as necessary.	—	—
3	FM16 operation check	PRCB CN18-2 (REM) PRCB CN18-3 (LOCK)	C-12 to 13
4	Change FM16	—	—
1 5	PRCB ICP7 conduction check	—	—
6	Change PRCB	—	—

19.5.84 C2551: Abnormally low toner density detected cyan TCR sensor

19.5.85 C2553: Abnormally low toner density detected magenta TCR sensor

19.5.86 C2555: Abnormally low toner density detected yellow TCR sensor

Relevant parts	
Imaging unit /C Imaging unit /M Imaging unit /Y Toner cartridge /C Toner cartridge /M Toner cartridge /Y Toner empty sensor/C (PZS/C) Toner empty sensor/M (PZS/M) Toner empty sensor/Y (PZS/Y)	Toner supply motor/Y (M9) Toner supply motor/M (M10) Toner supply motor/C (M11) Toner cartridge motor Y/M (M13) Toner cartridge motor C/K (M14) Printer control board (PRCB)

Step	Action	WIRING DIAGRAM	
		Control signal	Location (Electrical component)
1	Perform image troubleshooting procedure if image density is low.	—	—
2	Clean the TCR sensor window on the underside of the imaging unit if dirty	—	—
3	Reinstall imaging unit	—	—
4	Reinstall toner cartridge	—	—
5	M9, M10, M11 operation check (At this time, IU must be non-installation.)	M9: PRCB CN19-1 to 4 M10: PRCB CN19-5 to 8 M11: PRCB CN19-9 to 12	C-21
6	M13, M14 operation check	M13: PRCB CN20-5 to 8 M14: PRCB CN20-9 to 12	K-6
7	If the toner empty sensor and its surroundings inside the sub hopper are dirtied with toner, clean them.	—	—
8	Change imaging unit	—	—
⚠1 9	PRCB ICP1 or ICP2 conduction check	—	—
10	Change PRCB.	—	—

19.5.87 C2552: Abnormally high toner density detected cyan TCR sensor

19.5.88 C2554: Abnormally high toner density detected magenta TCR sensor

19.5.89 C2556: Abnormally high toner density detected yellow TCR sensor

Relevant parts	
Imaging unit /C Imaging unit /M Imaging unit /Y Toner cartridge /C Toner cartridge /M Toner cartridge /Y	Sub hopper unit Printer control board (PRCB)

Step	Action	WIRING DIAGRAM	
		Control signal	Location (Electrical component)
1	Reinstall toner cartridge	—	—
2	Reinstall imaging unit	—	—
3	Change imaging unit	—	—
1 4	PRCB ICP17 conduction check	—	—
5	Change PRCB	—	—
6	Change sub hopper unit	—	—

19.5.90 C2557: Abnormally low toner density detected black TCR sensor

Relevant parts	
Drum unit /K Toner cartridge /K Toner empty sensor/K (PZS/K)	Toner supply motor/K (M12) Toner cartridge motor C/K (M14) Printer control board (PRCB)

Step	Action	WIRING DIAGRAM	
		Control signal	Location (Electrical component)
1	Perform image troubleshooting procedure if image density is low.	—	—
2	M12 operation check (At this time, IU must be non-installation.)	PRCB CN19-13 to 16	C-20
3	M14 operation check	PRCB CN20-9 to 12	K-6
4	Reinstall drum unit/K	—	—
5	Reinstall toner cartridge	—	—
1 6	If the toner empty sensor and its surroundings inside the sub hopper are dirtied with toner, clean them.	—	—
7	Change drum unit /K	—	—
8	Change PRCB.	—	—

19.5.91 C2558: Abnormally high toner density detected black TCR sensor

Relevant parts	
Drum unit /K Toner cartridge /K	Sub hopper unit Printer control board (PRCB)

Step	Action	WIRING DIAGRAM	
		Control signal	Location (Electrical component)
1	Reinstall drum unit/K	—	—
2	Reinstall toner cartridge	—	—
3	Change drum unit/K	—	—
1 4	PRCB ICP17 conduction check	—	—
5	Change PRCB	—	—
6	Change sub hopper unit	—	—

19.5.92 C2559: Cyan TCR sensor adjustment failure

19.5.93 C255A: Magenta TCR sensor adjustment failure

19.5.94 C255B: Yellow TCR sensor adjustment failure

Relevant parts	
Imaging unit /C Imaging unit /M Imaging unit /Y	Printer control board (PRCB)

Step	Action	WIRING DIAGRAM	
		Control signal	Location (Electrical component)
1	Reinstall imaging unit	—	—
2	Change imaging unit	—	—
1 3	PRCB ICP1 or ICP2 conduction check	—	—
1 4	PRCB ICP17 conduction check	—	—
5	Change PRCB	—	—

19.5.95 C255C: Black TCR sensor adjustment failure

Relevant parts	
Drum unit /K	Printer control board (PRCB)

Step	Action	WIRING DIAGRAM	
		Control signal	Location (Electrical component)
1	Reinstall drum unit /K	—	—
2	Change drum unit /K	—	—
1 3	PRCB ICP17 conduction check	—	—
4	Change PRCB	—	—

19.5.96 C2561: Cyan TCR sensor failure

19.5.97 C2562: Magenta TCR sensor failure

19.5.98 C2563: Yellow TCR sensor failure

19.5.99 C2564: Black TCR sensor failure

Relevant parts	
Imaging unit /C Imaging unit /M Imaging unit /Y Drum unit /K	Printer control board (PRCB)

Step	Action	WIRING DIAGRAM	
		Control signal	Location (Electrical component)
1	Reinstall imaging unit	—	—
2	Check the harness from imaging unit to PRCB for proper connection and correct as necessary.	—	—
3	Change imaging unit	—	—
4	PRCB ICP1 or ICP2 conduction check	—	—
5	Change PRCB	—	—

19.5.100 C2650: Main backup media access error

Relevant parts	
Service EEPROM board (SV ERB)	Printer control board (PRCB)

Step	Action	WIRING DIAGRAM	
		Control signal	Location (Electrical component)
1	Check the connector (CN33) on PRCB, the connector (CN1) on SV ERB, and the harness between the boards for proper connection and correct as necessary.	—	—
2	Change PRCB *1.* Turn OFF the main power switch and replace the current PRCB with a new one. (When using a PRCB of another machine in service, be sure to use a PRCB installed in the same model.) See P.134 *2.* Update the PRCB firmware. *3.* After completing the firmware update, turn OFF and ON the main power switch and check to see that warm-up is started. Make sure that malfunction codes other than C2650 or improper IU/TC placement is not detected. *4.* When the trouble cannot be solved, reinstall the removed PRCB to the original board. **NOTE** • **When taking the above steps, check whether PRCB is defective or not without replacing the SV ERB.**	—	—
3	Change SV ERB *1.* Replace the current SV ERB with a new one. See P.141 *2.* Turn ON the main power switch and check to see that warm-up is started. (One minute is spent to prepare the new SV ERB for use. During the period, the control panel backlight stays off.) Make sure that malfunction codes other than C2650 or improper IU/TC placement is not detected. *3.* Make the specified readjustments. See P.141	—	—
4	If the above actions do not solve the problem, contact KMBT.	—	—

19.5.101 C2651: EEPROM access error (Imaging unit/C)

19.5.102 C2652: EEPROM access error (Imaging unit/M)

19.5.103 C2653: EEPROM access error (Imaging unit/Y)

19.5.104 C2654: EEPROM access error (Drum unit/K)

Relevant parts	
Imaging unit /C Imaging unit /M Imaging unit /Y Drum unit /K	Printer control board (PRCB)

Step	Action	WIRING DIAGRAM	
		Control signal	Location (Electrical component)
1	Clean the connection between the imaging unit and the machine if dirty	—	—
2	Reinstall imaging unit	—	—
3	Check the harness for proper connection and correct as necessary.	—	—
4	Change imaging unit	—	—
5	Change PRCB	—	—

19.5.105 C2A14: Drum unit/K new release failure

19.5.106 C2A21: Toner cartridge/C new release failure

19.5.107 C2A22: Toner cartridge/M new release failure

19.5.108 C2A23: Toner cartridge/Y new release failure

19.5.109 C2A24: Toner cartridge/K new release failure

Relevant parts	
Toner cartridge/C Toner cartridge/M Toner cartridge/Y Toner cartridge/K	Drum unit/K Printer control board (PRCB)

Step	Action	WIRING DIAGRAM	
		Control signal	Location (Electrical component)
1	Clean the connection between the toner cartridge/drum unit and the machine if dirty.	—	—
2	Reinstall toner cartridge/drum unit	—	—
3	Check the harness for proper connection and correct as necessary.	—	—
4	Change toner cartridge/drum unit	—	—
5	Change PRCB	—	—

19.5.110 C3101: Fusing roller separation failure

Relevant parts	
Roller pressure welding alienation sensor (PS55) Fusing pressure retraction motor (M29)	Printer control board (PRCB) Fusing unit

Step	Action	WIRING DIAGRAM	
		Control signal	Location (Electrical component)
1	Check the M29 connector for proper connection and correct as necessary.	—	—
2	PS55 I/O check, sensor check	—	—
3	M29 operation check	PRCB CN8-3 to 4	C-16
4	Change M29	—	—
5	Change fusing unit	—	—
6	Change PRCB	—	—

19.5.111 C3102: Fusing roller failure to turn

Relevant parts	
Heating roller rotation sensor/1 (PS56) Fusing motor (M30)	Printer control board (PRCB) Fusing unit

Step	Action	WIRING DIAGRAM	
		Control signal	Location (Electrical component)
1	Check the fusing unit for proper installation and correct as necessary.	—	—
2	Check the M30 connector for proper connection and correct as necessary.	—	—
3	PS56 I/O check, sensor check	PRCB CN22-12 (ON)	C-17
4	M30 operation check	PRCB CN9-3 (REM) PRCB CN9-6 (LOCK)	K-8
5	Change M30	—	—
6	Change fusing unit	—	—
7	Change PRCB	—	—

19.5.112 C3201: Fusing motor failure to turn

19.5.113 C3202: Fusing motor turning at abnormal timing

Relevant parts	
Fusing motor (M30)	Printer control board (PRCB)

Step	Action	WIRING DIAGRAM	
		Control signal	Location (Electrical component)
1	Check the M30 connector for proper connection and correct as necessary.	—	—
2	Check the loading status of the fusing unit drive, and correct the error as necessary.	—	—
3	Check the fusing unit, PRCB for proper connection and correct or change as necessary.	—	—
4	M30 operation check	PRCB CN9-3 (REM) PRCB CN9-6 (LOCK)	K-8
5	Change M30	—	—
1 6	PRCB ICP16 conduction check	—	—
7	Change PRCB	—	—

19.5.114 C3303: Fusing cooling fan motor/ 1 failure to turn

Relevant parts	
Fusing cooling fan motor/1 (FM2)	Printer control board (PRCB)

Step	Action	WIRING DIAGRAM	
		Control signal	Location (Electrical component)
1	Check the FM2 connector for proper connection and correct as necessary.	—	—
2	Check the fan for possible overload and correct as necessary.	—	—
3	FM2 operation check	PRCB CN11-1 (REM) PRCB CN11-3 (LOCK)	K-7
4	Change FM2	—	—
1 5	PRCB ICP9 conduction check	—	—
6	Change PRCB	—	—

19.5.115 C3304: Fusing cooling fan motor/ 2 failure to turn

	Relevant parts	
⚠1	Fusing cooling fan motor/2 (FM4)	Paper feed/transport drive board (PFTDB)

	Step	Action	WIRING DIAGRAM	
			Control signal	Location (Electrical component)
	1	Check the FM4 connector for proper connection and correct as necessary.	—	—
	2	Check the fan for possible overload and correct as necessary.	—	—
	3	FM4 operation check	PFTDB CN5-6 (REM) PFTDB CN5-8 (LOCK)	Q-6
	4	Change FM4	—	—
⚠1	5	PFTDB ICP2 conduction check	—	—
⚠1	6	Change PFTDB	—	—

19.5.116 C3305: Fusing cooling fan motor/ 3 failure to turn

	Relevant parts	
⚠1	Fusing cooling fan motor/3 (FM5)	Paper feed/transport drive board (PFTDB)

	Step	Action	WIRING DIAGRAM	
			Control signal	Location (Electrical component)
	1	Check the FM5 connector for proper connection and correct as necessary.	—	—
	2	Check the fan for possible overload and correct as necessary.	—	—
	3	FM5 operation check	PFTDB CN5-9 (REM) PFTDB CN5-11 (LOCK)	Q-6
	4	Change FM5	—	—
⚠1	5	PFTDB ICP2 conduction check	—	—
⚠1	6	Change PFTDB	—	—

19.5.117 C3424: Fusing heaters trouble (soaking side)

Relevant parts	
Fusing unit	IH power supply (IHPU) DC power supply (DCPU) Printer control board (PRCB)

Step	Action	WIRING DIAGRAM	
		Control signal	Location (Electrical component)
1	Check the fusing unit for correct installation (whether it is secured in position).	—	—
2	Check the open/close operation of the upper right door.	—	—
3	Check the fusing unit, IHPU, MFPB and DCPU for proper connection and correct or change as necessary.	—	—
4	Change fusing unit	—	—
5	Change IHPU	—	—
6	Change PRCB	—	—
7	Change DCPU	—	—

19.5.118 C3425: Fusing heaters trouble (NC sensor)

Relevant parts	
Fusing unit	IH power supply (IHPU) Relay drive board (REDB) Printer control board (PRCB)

Step	Action	WIRING DIAGRAM	
		Control signal	Location (Electrical component)
1	Check the fusing unit for correct installation (whether it is secured in position).	—	—
2	Check the open/close operation of the upper right door.	—	—
3	Check the fusing unit, IHPU, MFPB and REDB for proper connection and correct or change as necessary.	—	—
4	Change fusing unit	—	—
5	Change IHPU	—	—
1 6	PRCB ICP17 conduction check	—	—
7	Change PRCB	—	—
8	Change REDB	—	—

19.5.119 C3721: Fusing abnormally high temperature detection (Center of the heating roller)

19.5.120 C3722: Fusing abnormally high temperature detection (Edge of the heating roller)

19.5.121 C3725: Fusing abnormally high temperature detection (NC sensor)

Relevant parts	
Fusing unit	IH power supply (IHPU) Relay drive board (REDB) Printer control board (PRCB)

Step	Action	WIRING DIAGRAM	
		Control signal	Location (Electrical component)
1	Check the fusing unit for correct installation (whether it is secured in position).	—	—
2	Check the open/close operation of the upper right door.	—	—
3	Check the fusing unit, IHPU, MFPB and REDB for proper connection and correct or change as necessary.	—	—
4	Change fusing unit	—	—
5	Change IHPU	—	—
6	Change PRCB	—	—
7	Change REDB	—	—

19.5.122 C3724: Fusing abnormally high temperature detection (soaking side)

Relevant parts	
Fusing unit	IH power supply (IHPU) DC power supply (DCPU) Printer control board (PRCB)

Step	Action	WIRING DIAGRAM	
		Control signal	Location (Electrical component)
1	Check the fusing unit for correct installation (whether it is secured in position).	—	—
2	Check the open/close operation of the upper right door.	—	—
3	Check the fusing unit, IHPU, MFPB and DCPU for proper connection and correct or change as necessary.	—	—
4	Change fusing unit	—	—
5	Change IHPU	—	—
6	Change PRCB	—	—
7	Change DCPU	—	—

19.5.123 C3822: Fusing abnormally low temperature detection (Edge of the heating roller)

19.5.124 C3825: Fusing abnormally low temperature detection (NC sensor)

Relevant parts	
Fusing unit	IH power supply (IHPU) Relay drive board (REDB) Printer control board (PRCB)

Step	Action	WIRING DIAGRAM	
		Control signal	Location (Electrical component)
1	Check the fusing unit for correct installation (whether it is secured in position).	—	—
2	Check the open/close operation of the upper right door.	—	—
3	Check the fusing unit, IHPU, PRCB and REDB for proper connection and correct or change as necessary.	—	—
4	Change fusing unit	—	—
5	Change IHPU	—	—
6	PRCB ICP17 conduction check	—	—
7	Change PRCB	—	—
8	Change REDB	—	—

19.5.125 C3824: Fusing abnormally low temperature detection (soaking side)

Relevant parts	
Fusing unit	IH power supply (IHPU) DC power supply (DCPU) Printer control board (PRCB)

Step	Action	WIRING DIAGRAM	
		Control signal	Location (Electrical component)
1	Check the fusing unit for correct installation (whether it is secured in position).	—	—
2	Check the open/close operation of the upper right door.	—	—
3	Check the fusing unit, IHPU, PRCB and DCPU for proper connection and correct or change as necessary.	—	—
4	Change fusing unit	—	—
5	Change IHPU	—	—
6	Change PRCB	—	—
7	Change DCPU	—	—

19.5.126 C3921: Fusing sensor wire breaks detection (Center of the heating roller)

19.5.127 C3922: Fusing sensor wire breaks detection (Edge of the heating roller)

19.5.128 C3925: Fusing sensor wire breaks detection (NC sensor)

Relevant parts	
Fusing unit	IH power supply (IHPU) Relay drive board (REDB) Printer control board (PRCB)

Step	Action	WIRING DIAGRAM	
		Control signal	Location (Electrical component)
1	Check the fusing unit for correct installation (whether it is secured in position).	—	—
2	Check the open/close operation of the upper right door.	—	—
3	Check the fusing unit, IHPU, PRCB and REDB for proper connection and correct or change as necessary.	—	—
4	Change fusing unit	—	—
5	Change IHPU	—	—
⚠1 6	PRCB ICP17 conduction check	—	—
7	Change PRCB	—	—
8	Change REDB	—	—

19.5.129 C3924: Fusing sensor wire breaks detection (soaking side)

Relevant parts	
Fusing unit	IH power supply (IHPU) DC power supply (DCPU) Printer control board (PRCB)

Step	Action	WIRING DIAGRAM	
		Control signal	Location (Electrical component)
1	Check the fusing unit for correct installation (whether it is secured in position).	—	—
2	Check the open/close operation of the upper right door.	—	—
3	Check the fusing unit, IHPU, PRCB and DCPU for proper connection and correct or change as necessary.	—	—
4	Change fusing unit	—	—
5	Change IHPU	—	—
6	Change PRCB	—	—
7	Change DCPU	—	—

19.5.130 C392A: Fusing sensor contamination (NC sensor)

Relevant parts	
Fusing unit Heating roller temperature sensor/1 (TEMS1)	IH power supply (IHPU) DC power supply (DCPU) Printer control board (PRCB)

Step	Action	WIRING DIAGRAM	
		Control signal	Location (Electrical component)
1	Wipe the TEMS1 clean of dirt if any. <Cleaning procedure> • Clear away a dirt or a foreign object on the sensor with a cotton swab. • When a dirt is left even if you cleaned the sensor by above procedure, clear away a dirt or a foreign object on the sensor using a cotton swab dampened with the alcohol. And, wipe off the sensor with a dry cotton swab afterwards.	—	—
2	Check the TEMS1 for installed position and proper connector connection.	—	—
3	Check the connection of the fusing unit.	—	—
4	Check the fusing unit, IHPU, PRCB and DCPU for proper connection and correct or change as necessary.	—	—
5	Change TEMS1	—	—
6	Change fusing unit	—	—
7	PRCB ICP17 conduction check	—	—
8	Change PRCB	—	—

19.5.131 C3B02: IH malfunction (CPU)

19.5.132 C3B03: IH malfunction (monitor)

Relevant parts	
Fusing unit IH coil unit	IH power supply (IHPU) Relay drive board (REDB) Printer control board (PRCB)

Step	Action	WIRING DIAGRAM	
		Control signal	Location (Electrical component)
1	Check the fusing unit for correct installation (whether it is secured in position).	—	—
2	Check the open/close operation of the upper right door.	—	—
3	Check the fusing unit, degaussing coil unit, IHPU, PRCB and REDB for proper connection and correct or change as necessary.	—	—
4	Change fusing unit	—	—
5	Change IH coil unit	—	—
6	Change IHPU	—	—
7	Change PRCB	—	—
8	Change REDB	—	—

19.5.133 C3B05: IH temperature sensor defect

19.5.134 C3B06: IH surge error

19.5.135 C3B07: IH input power error

19.5.136 C3B08: IH input voltage error

Relevant parts	
IH coil unit	IH power supply (IHPU) Relay drive board (REDB) Printer control board (PRCB)

Step	Action	WIRING DIAGRAM	
		Control signal	Location (Electrical component)
1	Check the connection of the fusing unit.	—	—
2	Check the fusing unit, degaussing coil unit, IHPU, PRCB and REDB for proper connection and correct or change as necessary.	—	—
3	Change degaussing coil unit	—	—
4	Change IHPU	—	—
5	Change PRCB	—	—
6	Change REDB	—	—

19.5.137 C4101: Polygon motor rotation trouble

Relevant parts	
PH unit	PH relay board (REYB/PH) Printer control board (PRCB)

Step	Action	WIRING DIAGRAM	
		Control signal	Location (Electrical component)
1	Check the connector for proper connection and correct as necessary.	—	—
2	Change PH unit	—	—
1 3	REYB/PH ICP2 conduction check	—	—
4	Change REYB/PH	—	—
5	Change PRCB	—	—

19.5.138 C4301: PH cooling fan motor failure to turn

Relevant parts	
PH cooling fan motor (FM14)	PH relay board (REYB/PH) Printer control board (PRCB)

Step	Action	WIRING DIAGRAM	
		Control signal	Location (Electrical component)
1	Check the FM14 connector for proper connection and correct as necessary.	—	—
2	Check the fan for possible overload and correct as necessary.	—	—
3	FM14 operation check	REYB/PH CN4-1 (REM) REYB/PH CN4-3 (LOCK)	A to B-7
4	Change FM14	—	—
1 5	REYB/PH ICP1 conduction check	—	—
6	Change REYB/PH	—	—
7	Change DCPU	—	—

19.5.139 C4501: Laser malfunction

Relevant parts	
PH unit	PH relay board (REYB/PH) Printer control board (PRCB)

	Step	Action	WIRING DIAGRAM	
			Control signal	Location (Electrical component)
	1	Check the connector for proper connection and correct as necessary.	—	—
	2	Change PH unit	—	—
⚠1	3	REYB/PH ICP6 conduction check	—	—
	4	Change REYB/PH	—	—
⚠1	5	PRCB ICP17 conduction check	—	—
	6	Change PRCB	—	—

19.5.140 C5104: Transfer belt motor's failure to turn

19.5.141 C5105: Transfer belt motor's turning at abnormal timing

Relevant parts	
Transfer belt motor (M1)	Printer control board (PRCB)

	Step	Action	WIRING DIAGRAM	
			Control signal	Location (Electrical component)
	1	Check the M1 connector for proper connection and correct as necessary.	—	—
	2	Check M1 for proper drive coupling and correct as necessary.	—	—
	3	Check the PRCB connector for proper connection and correct as necessary.	—	—
	4	M1 operation check	PRCB CN35-3 (REM) PRCB CN35-6 (LOCK)	K-3
	5	Change M1	—	—
⚠1	6	PRCB ICP15 conduction check	—	—
	7	Change PRCB	—	—

19.5.142 C5304: IH cooling fan motor/1's failure to turn

Relevant parts	
IH cooling fan motor/1 (FM10)	Printer control board (PRCB)

Step	Action	WIRING DIAGRAM	
		Control signal	Location (Electrical component)
1	Check the FM10 connector for proper connection and correct as necessary.	—	—
2	Check the fan for possible overload and correct as necessary.	—	—
3	FM10 operation check	PRCB CN8-5 (REM) PRCB CN8-7 (LOCK)	C-16
4	Change FM10	—	—
1 5	PRCB ICP10 conduction check	—	—
6	Change PRCB	—	—

19.5.143 C5306: IH cooling fan motor/2's failure to turn

Relevant parts	
IH cooling fan motor/2 (FM12)	Printer control board (PRCB)

Step	Action	WIRING DIAGRAM	
		Control signal	Location (Electrical component)
1	Check the FM12 connector for proper connection and correct as necessary.	—	—
2	Check the fan for possible overload and correct as necessary.	—	—
3	FM12 operation check	PRCB CN8-8 (REM) PRCB CN8-10 (LOCK)	C-15
4	Change FM12	—	—
1 5	PRCB ICP10 conduction check	—	—
6	Change PRCB	—	—

19.5.144 C5351: Power supply cooling fan motor/1's failure to turn

Relevant parts	
Power supply cooling fan motor/1 (FM9)	DC power supply (DCPU) Printer control board (PRCB)

Step	Action	WIRING DIAGRAM	
		Control signal	Location (Electrical component)
1	Check the FM9 connector for proper connection and correct as necessary.	—	—
2	Check the fan for possible overload and correct as necessary.	—	—
3	FM9 operation check	DCPU PJ008-3 (LOCK)	W-15 to 16
4	Change FM9	—	—
⚠1 5	DCPU F551 conduction check	—	—
6	Change DCPU	—	—
7	Change PRCB	—	—

19.5.145 C5354: Ozone ventilation fan motor's failure to turn

Relevant parts	
Ozone ventilation fan motor (FM6)	Printer control board (PRCB)

Step	Action	WIRING DIAGRAM	
		Control signal	Location (Electrical component)
1	Check the FM6 connector for proper connection and correct as necessary.	—	—
2	Check the fan for possible overload and correct as necessary.	—	—
3	FM6 operation check	PRCB CN11-4 (REM) PRCB CN11-6 (LOCK)	K-7
4	Change FM6	—	—
⚠1 5	PRCB ICP9 conduction check	—	—
6	Change MFPB	—	—

19.5.146 C5356: Cooling fan motor's failure to turn

Relevant parts	
Cooling fan motor (FM3)	Printer control board (PRCB)

Step	Action	WIRING DIAGRAM	
		Control signal	Location (Electrical component)
1	Check the FM3 connector for proper connection and correct as necessary.	—	—
2	Check the fan for possible overload and correct as necessary.	—	—
3	FM3 operation check	PRCB CN15-4 (REM) PRCB CN15-6 (LOCK)	K-7 to 8
4	Change FM3	—	—
5	PRCB ICP6 conduction check	—	—
6	Change MFPB	—	—

19.5.147 C5370: MFP control board cooling fan motor's failure to turn

Relevant parts	
MFP control board cooling fan motor (FM17)	Slide Interface board (REYB/SL) MFP board (MFPB)

Step	Action	WIRING DIAGRAM	
		Control signal	Location (Electrical component)
1	Check the FM17 connector for proper connection and correct as necessary.	—	—
2	Check the fan for possible overload and correct as necessary.	—	—
3	FM17 operation check	MFPB PJ26-3 (LOCK)	O-26
4	Change FM17	—	—
5	Change REYB/SL	—	—
6	Change MFPB	—	—

19.5.148 C5372: MFP control board CPU temperature failure

Relevant parts	
CPU cooling fan motor	MFP board (MFPB)

Step	Action	WIRING DIAGRAM	
		Control signal	Location (Electrical component)
1	Reboot the machine.	—	—
2	Check the fan connector for proper connection and correct as necessary.	—	—
3	Check the fan for possible overload and correct as necessary.	—	—
4	Fan motor operation check	MFPB PJ20	O-26
5	Change MFPB	—	—

19.5.149 C6102: Drive system home sensor malfunction

19.5.150 C6103: Slider over running

Relevant parts	
Scanner home sensor (PS201) Scanner motor (M201)	Scanner relay board (REYB/SCAN) MFP board (MFPB)

Step	Action	WIRING DIAGRAM	
		Control signal	Location (Electrical component)
1	Correct or change the scanner drive (cable, pulley, gear, belt) if it is faulty.	—	—
2	Correct the scanner motor set screw if loose.	—	—
3	Adjust [Image Position Leading Edge] and [Feed Direction Adjustment].	—	—
4	Check the PS201, M201, REYB/SCAN and MFPB connector for proper connection and correct as necessary.	—	—
5	PS201 I/O check, sensor check	REYB/SCAN PJ3-5 (ON)	P-17
6	M201 operation check	REYB/SCAN PJ5-4 to 7	P-19
7	Change REYB/SCAN.	—	—
8	Change MFPB.	—	—

19.5.151 C6301: Optical cooling fan motor's failure to turn

Relevant parts	
Optical cooling fan motor (M202)	Scanner relay board (REYB/SCAN) MFP board (MFPB)

Step	Action	WIRING DIAGRAM	
		Control signal	Location (Electrical component)
1	Check the FM201 connector for proper connection and correct as necessary.	—	—
2	Check the fan for possible overload and correct as necessary.	—	—
3	M202 operation check	REYB/SCAN PJ4-3 (LOCK)	P-18 to 19
4	Change REYB/SCAN	—	—
5	Change MFPB	—	—

19.5.152 C6704: Image input time out

Relevant parts	
MFP board (MFPB)	CCD board (CCDB)

Step	Action	WIRING DIAGRAM	
		Control signal	Location (Electrical component)
1	Select [Service Mode] → [State Confirmation] → [Memory/HDD Adj.] → [Memory Bus Check] → [Scanner→Memory], and conduct the memory bus function.	—	—
2	Check the connectors between scanner section and MFPB for proper connection and correct as necessary.	—	—
3	Change MFPB	—	—
4	Change CCDB	—	—

19.5.153 C6751: CCD clamp/gain adjustment failure

Relevant parts	
Exposure unit	CCD board (CCDB) MFP board (MFPB)

Step	Action	WIRING DIAGRAM	
		Control signal	Location (Electrical component)
1	Correct the harness connection between CCDB and MFPB if faulty.	—	—
2	Check for possible extraneous light and correct as necessary.	—	—
3	Clean the lens, mirrors, CCD surface, and shading sheet if dirty	—	—
4	Correct reflective mirror of the scanner if faulty, or change scanner.	—	—
5	Change CCDB	—	—
6	Change MFPB	—	—

19.5.154 C6752: ASIC clock input error (front side)

19.5.155 C6753: ASIC clock input error (back side)

Relevant parts	
Exposure unit	CCD board (CCDB) MFP board (MFPB)

Step	Action	WIRING DIAGRAM	
		Control signal	Location (Electrical component)
1	Correct the harness connection of CCDB if faulty.	—	—
2	Change CCDB	—	—
3	Change MFPB	—	—

19.5.156 C6901: DSC board mount failure 1

19.5.157 C6902: DSC board bus check NG1-1

19.5.158 C6903: DSC board bus check NG1-2

Relevant parts	
DSC board (SC-507)	MFP board (MFPB)

Step	Action	WIRING DIAGRAM	
		Control signal	Location (Electrical component)
1	Correct the harness connection of DSC board if faulty.	—	—
2	Change DSC board	—	—
3	Change MFPB	—	—

19.5.159 C6F01: Scanner sequence trouble 1

Relevant parts	
MFP board (MFPB)	DF control board (DFCB)

Step	Action	WIRING DIAGRAM	
		Control signal	Location (Electrical component)
1	Correct the harness connection between main body and ADF if faulty.	—	—
2	Change DFCB	—	—
3	Change MFPB	—	—

19.5.160 C8101: Before reading pressure welding alienation mechanism

Relevant parts	
Reading roller pressure/retraction motor (M4) Read roller sensor (PS6)	DF control board (DFCB)

Step	Action	WIRING DIAGRAM	
		Control signal	Location (Electrical component)
1	Check the motor and sensor connectors for proper connection, and correct as necessary.	—	—
2	Check the connector of M4 for proper drive coupling, and correct as necessary.	—	—
3	PS6 I/O check, sensor check	DFCB PJ6-3 (ON)	DF-618 I-4
4	M4 operation check	DFCB PJ6-5 to 6	DF-618 I-4
5	Change M4	—	—
6	DFCB PS3 conduction check	—	—
7	Change DFCB	—	—

19.5.161 C8102: Turn around pressure welding alienation trouble

Relevant parts	
Switchback roller pressure/retraction motor (M5) Reverse roller sensor (PS7)	DF control board (DFCB)

Step	Action	WIRING DIAGRAM	
		Control signal	Location (Electrical component)
1	Check the motor and sensor connectors for proper connection, and correct as necessary.	—	—
2	Check the connector of M5 for proper drive coupling, and correct as necessary.	—	—
3	PS7 I/O check, sensor check	REYB PJ3-3 (ON)	DF-618 K to L-10
⚠1 4	DFCB F9 conduction check	—	—
5	M5 operation check	DFCB PJ6-10 to 11	DF-618 I-7
6	Change M5	—	—
⚠1 7	DFCB PS2 conduction check	—	—
8	Change DFCB	—	—

19.5.162 C8103: Lift up mechanism trouble (Upward movement)

Relevant parts	
Lift-up motor (M6) Lift-up upper sensor (PS16)	DF control board (DFCB)

Step	Action	WIRING DIAGRAM	
		Control signal	Location (Electrical component)
1	Check the motor and sensor connectors for proper connection, and correct as necessary.	—	—
2	Check the connector of M6 for proper drive coupling, and correct as necessary.	—	—
3	PS16 I/O check, sensor check	DFCB PJ11-3 (ON)	DF-618 B-6
4	M6 operation check	DFCB PJ5-6 to 7	DF-618 I-7 to 8
5	Change M6	—	—
6	Change DFCB	—	—

19.5.163 C8104: Glass movement trouble

Relevant parts	
Original glass moving unit Original glass moving motor (M202)	Original glass position control board (OGPCB)

Step	Action	WIRING DIAGRAM	
		Control signal	Location (Electrical component)
1	Check the motor and sensor connectors for proper connection, and correct as necessary.	—	—
2	Check the connector of M202 for proper drive coupling, and correct as necessary.	—	—
3	Change original glass moving unit	—	—
4	Change OGPCB	—	—

19.5.164 C8106: Lift up mechanism failure (Downward movement)

Relevant parts	
Lift-up motor (M6) Lift-up lower sensor (PS15)	DF control board (DFCB)

Step	Action	WIRING DIAGRAM	
		Control signal	Location (Electrical component)
1	Check the motor and sensor connectors for proper connection, and correct as necessary.	—	—
2	Check the connector of M6 for proper drive coupling, and correct as necessary.	—	—
3	PS15 I/O check, sensor check	REYB PJ3-6 (ON)	DF-618 K to L-10
1 4	DFCB F9 conduction check	—	—
5	M6 operation check	DFCB PJ5-6 to 7	DF-618 I-7 to 8
6	Change M6	—	—
1 7	DFCB PS1 conduction check	—	—
8	Change DFCB	—	—

19.5.165 C8302: Cooling fan failure

Relevant parts	
Cooling fan (FM1)	DF control board (DFCB)

Step	Action	WIRING DIAGRAM	
		Control signal	Location (Electrical component)
1	Check the connector of FM1 for proper connection and correct as necessary.	—	—
2	Check the fan for possible overload and correct as necessary.	—	—
3	FM1 operation check	DFCB PJ7-1 to 3	DF-618 I-2 to 3
4	Change FM1	—	—
1 5	DFCB F7 conduction check	—	—
6	Change DFCB	—	—

19.5.166 C8401: EEPROM failure

Relevant parts	
DF control board (DFCB)	

Step	Action	WIRING DIAGRAM	
		Control signal	Location (Electrical component)
1	Disconnect and then connect the power cord. Turn OFF the main power switch, wait for 10 sec. or more, and turn ON the main power switch.	—	—
2	Rewrite the firmware.	—	—
3	Change DFCB	—	—

19.5.167 C9401: Exposure turning on the lamp trouble detection

19.5.168 C9402: Exposure turning on the lamp abnormally detection

Relevant parts	
Exposure unit Flat cable	Inverter board (INVB) CCD board (CCDB) Scanner relay board (REYB/SCAN) MFP board (MFPB)

Step	Action	WIRING DIAGRAM	
		Control signal	Location (Electrical component)
1	Check the connection between the lamp harness and the inverter board, and correct if necessary.	—	—
2	Check the connection between REYB/SCAN and the inverter board, and correct if necessary.	—	—
3	Check the connection between REYB/SCAN and MFPB, and correct if necessary.	—	—
4	Check that the connection between CCDB and IPB, and correct if necessary.	—	—
5	Change INVB	—	—
6	Change exposure unit	—	—
7	Change IPB	—	—
8	Change CCDB	—	—
9	Change REYB/SCAN	—	—

19.5.169 CA051: Standard controller configuration failure

19.5.170 CA052: Controller hardware error

19.5.171 CA053: Controller start failure

Relevant parts	
MFP board (MFPB)	

Step	Action	WIRING DIAGRAM	
		Control signal	Location (Electrical component)
1	Check to see if the following setting has been correctly made: [Service Mode] → [System 2] → [Image Controller Setting]. If changing the setting, turn OFF the main power switch and turn it ON again after 10 seconds or more.	—	—
2	Check the connectors of the MFP board (MFPB) for proper connection and correct as necessary.	—	—
3	Change MFPB	—	—

19.5.172 CC001: Vendor connection failure

Relevant parts	
Printer control board (PRCB)	Coin vendor (Japan) Coin vendor kit (North America, Europe)

Step	Action	WIRING DIAGRAM	
		Control signal	Location (Electrical component)
1	Check the vendor connector for proper connection and correct as necessary.	—	—
2	Check the PRCB connector for proper connection and correct as necessary.	—	—
3	Change PRCB	—	—

19.5.173 CC151: ROM contents error upon startup (MSC)

19.5.174 CC152: ROM contents error upon startup (Scanner)

19.5.175 CC153: ROM contents error upon startup (PRT)

Step	Action	WIRING DIAGRAM	
		Control signal	Location (Electrical component)
1	Check the ROM version.	—	—
2	Rewrite the firmware.	—	—
3	Replace the appropriate board.	—	—

19.5.176 CC155: Finisher ROM error

Relevant parts	
DF control board (DFCB)	

Step	Action	WIRING DIAGRAM	
		Control signal	Location (Electrical component)
1	Disconnect and then connect the power cord. Turn OFF the main power switch, wait for 10 sec. or more, and turn ON the main power switch.	—	—
2	Rewrite firmware.	—	—
3	Change FSCB	—	—

19.5.177 CC156: ADF ROM error

Relevant parts	
DF control board (DFCB)	

Step	Action	WIRING DIAGRAM	
		Control signal	Location (Electrical component)
1	Disconnect and then connect the power cord. Turn OFF the main power switch, wait for 10 sec. or more, and turn ON the main power switch.	—	—
2	Rewrite the firmware.	—	—
3	Change DFCB	—	—

19.5.178 CC157: Finisher ROM error (RU)

Relevant parts	
Transport control board (TRCB)	FS control board (FSCB)

Step	Action	WIRING DIAGRAM	
		Control signal	Location (Electrical component)
1	Disconnect and then connect the power cord. Turn OFF the main power switch, wait for 10 sec. or more, and turn ON the main power switch.	—	—
2	Rewrite the firmware.	—	—
3	Change TRCB	—	—
4	Change DFCB	—	—

19.5.179 CC158: Finisher ROM error (ZU)

Relevant parts	
ZU control board (ZUCB)	

Step	Action	WIRING DIAGRAM	
		Control signal	Location (Electrical component)
1	Disconnect and then connect the power cord. Turn OFF the main power switch, wait for 10 sec. or more, and turn ON the main power switch.	—	—
2	Rewrite the firmware.	—	—
3	Change ZUCB	—	—

⚠1 19.5.180 CC159: ROM contents error upon startup (DSC1)

19.5.181 CC15A: ROM contents error upon startup (DSC2)

Relevant parts	
DSC board (SC-507)	

Step	Action	WIRING DIAGRAM	
		Control signal	Location (Electrical component)
1	Check the DSC board connector for proper connection and correct as necessary.	—	—
2	Disconnect and then connect the power cord. Turn OFF the main power switch, wait for 10 sec. or more, and turn ON the main power switch.	—	—
3	Rewrite the firmware.	—	—
4	Change DSC board	—	—

⚠1 19.5.182 CC15B: Finisher ROM error (SD)

Relevant parts	
SD drive board (SDDB)	

Step	Action	WIRING DIAGRAM	
		Control signal	Location (Electrical component)
1	Disconnect and then connect the power cord. Turn OFF the main power switch, wait for 10 sec. or more, and turn ON the main power switch.	—	—
2	Rewrite the firmware.	—	—
3	Change SDDB	—	—

19.5.183 CC163: ROM contents error (PRT)

Relevant parts	
Service EEPROM board (SV ERB)	Printer control board (PRCB)

Step	Action	WIRING DIAGRAM	
		Control signal	Location (Electrical component)
1	Rewrite the firmware.	—	—
2	Change PRCB *1.* Turn OFF the main power switch and replace the current PRCB with a new one. (When using a PRCB of another machine in service, be sure to use a PRCB installed in the same model.) See P.134 *2.* Update the PRCB firmware. *3.* After completing the firmware update, turn OFF and ON the main power switch and check to see that warm-up is started. *4.* When the trouble cannot be solved, reinstall the removed PRCB to the original board. **NOTE** • **When taking the above steps, check whether PRCB is defective or not without replacing the SV ERB.**	—	—
3	Change SV ERB *1.* Replace the current SV ERB with a new one. See P.141 *2.* Turn ON the main power switch and check to see that warm-up is started. (One minute is spent to prepare the new SV ERB for use. During the period, the control panel backlight stays off.) *3.* Make the specified readjustments. See P.141	—	—
4	If the above actions do not solve the problem, contact KMBT.	—	—

19.5.184 CC164: ROM contents error (MSC)

Relevant parts	
Printer control board (PRCB)	MFP board (MFPB)

Step	Action	WIRING DIAGRAM	
		Control signal	Location (Electrical component)
1	Check the ROM version.	—	—
2	Rewrite the firmware.	—	—
3	Replace the corresponding board.	—	—
4	When not reviving even if the above-mentioned procedure is done, contact the responsible people of KMBT.	—	—

19.5.185 CC165: ROM contents error (ADF)

Relevant parts	
DF control board (DFCB)	

Step	Action	WIRING DIAGRAM	
		Control signal	Location (Electrical component)
1	Disconnect and then connect the power cord. Turn OFF the main power switch, wait for 10 sec. or more, and turn ON the main power switch.	—	—
2	Rewrite the firmware.	—	—
3	Change DFCB	—	—

19.5.186 CC170: Dynamic link error during starting (AP0)

19.5.187 CC171: Dynamic link error during starting (AP1)

19.5.188 CC172: Dynamic link error during starting (AP2)

19.5.189 CC173: Dynamic link error during starting (AP3)

19.5.190 CC174: Dynamic link error during starting (AP4)

19.5.191 CC180: Dynamic link error during starting (LDR)

19.5.192 CC181: Dynamic link error during starting (IBR)

19.5.193 CC182: Dynamic link error during starting (IID)

19.5.194 CC183: Dynamic link error during starting (IPF)

19.5.195 CC184: Dynamic link error during starting (IMY)

19.5.196 CC185: Dynamic link error during starting (SPF)

19.5.197 CC186: Dynamic link error during starting (OAP)

Relevant parts	
MFP board (MFPB)	NVRAM board (NRB)

Step	Action	WIRING DIAGRAM	
		Control signal	Location (Electrical component)
1	If the malfunction code “C-C172” has occurred, access [Service Mode] → [System 2] → [Image Controller Setting] and check to see if “Controller 2,” “Controller 3,” or “Others” is set for [Image Controller Setting]. If any of these is set, according to the kind of controller, select “Controller 0” or “Controller 1.”	—	—
2	Change MFPB.	—	—
3	When not reviving even if the above-mentioned procedure is done, contact the responsible people of KMBT.	—	—

19.5.198 CC190: Outline font load error

Relevant parts	
MFP board (MFPB)	Hard disk

Step	Action	WIRING DIAGRAM	
		Control signal	Location (Electrical component)
1	Check the hard disk connector for proper connection and correct as necessary.	—	—
2	Format hard disk.	—	—
3	Change hard disk	—	—
4	Change MFPB.	—	—

19.5.199 CD002: JOB RAM save error

Relevant parts	
MFP board (MFPB)	Hard disk

Step	Action	WIRING DIAGRAM	
		Control signal	Location (Electrical component)
1	Check the hard disk connector for proper connection and correct as necessary.	—	—
2	Format hard disk.	—	—
3	Change hard disk.	—	—
4	Change MFPB.	—	—

19.5.200 CD004: Hard disk access error (connection failure)

19.5.201 CD00F: Hard disk data transfer error

19.5.202 CD020: Hard disk verify error

Relevant parts	
MFP board (MFPB)	Hard disk

Step	Action	WIRING DIAGRAM	
		Control signal	Location (Electrical component)
1	Check the hard disk connector for proper connection and correct as necessary.	—	—
2	Reinstall the hard disk.	—	—
3	Change hard disk.	—	—
4	Change MFPB.	—	—

19.5.203 CD010: Hard disk unformat

Relevant parts	
MFP board (MFPB)	Hard disk

Step	Action	WIRING DIAGRAM	
		Control signal	Location (Electrical component)
1	Select [Service Mode] → [State Confirmation] → [Memory/HDD Adj.] → [HDD Format], and conduct the HDD format function.	—	—
2	Change hard disk.	—	—
3	Change MFPB	—	—

19.5.204 CD011: Hard disk out of specifications mounted

Relevant parts	
Hard disk	

Step	Action	WIRING DIAGRAM	
		Control signal	Location (Electrical component)
1	Check the hard disk specifications.	—	—
2	Change the hard disk.	—	—

19.5.205 CD041 to CD046: HDD command execution error Address Mark Not Found

Relevant parts	
Hard disk	

Step	Action	WIRING DIAGRAM	
		Control signal	Location (Electrical component)
1	Check the hard disk specifications.	—	—
2	Format hard disk.	—	—
3	Change the hard disk.	—	—

19.5.206 CD047 to CD04B: HDD SCSI library error

Relevant parts	
Hard disk	

Step	Action	WIRING DIAGRAM	
		Control signal	Location (Electrical component)
1	Check the hard disk specifications.	—	—
2	Format hard disk.	—	—
3	Change the hard disk.	—	—

19.5.207 CD201: File memory mounting error

19.5.208 CD202: Memory capacity discrepancy

19.5.209 CD203: Memory capacity discrepancy 2

Relevant parts	
MFP board (MFPB)	Memory

Step	Action	WIRING DIAGRAM	
		Control Signal	Location (Electrical Component)
1	Check to see if the memory on MFPB is installed correctly.	—	—
2	Change the memory on MFPB.	—	—
3	Change MFPB.	—	—

19.5.210 CD211: PCI-SDRAM DMA operation failure

19.5.211 CD212: Compression/extraction timeout detection

Relevant parts	
MFP board (MFPB)	

Step	Action	WIRING DIAGRAM	
		Control Signal	Location (Electrical Component)
1	Change MFPB.	—	—

19.5.212 CD231: No Fax memory at FAX board mounting

Relevant parts	
MFP board (MFPB)	FAX board

Step	Action	WIRING DIAGRAM	
		Control Signal	Location (Electrical Component)
1	Check to see if the FAX board is installed correctly.	—	—
2	Change PRCB.	—	—

19.5.213 CD241: Encryption ASIC setting error

19.5.214 CD242: EncryptionASIC mounting error

Relevant parts	
MFP board (MFPB)	

Step	Action	WIRING DIAGRAM	
		Control Signal	Location (Electrical Component)
1	Check the MFP board connector for proper connection and correct as necessary.	—	—
2	Change <FPB	—	—

19.5.215 CD252: No relay circuit boards for IC-412 mounting at IC-412 mount setting

Relevant parts	
MFP board (MFPB)	Relay circuit boards (VI-505)

Step	Action	WIRING DIAGRAM	
		Control signal	Location (Electrical component)
1	If the IC-412 is not mounted, access [Service Mode] → [System 2] → [Image Controller Setting] and check to see if “Controller 0” is set for [Image Controller Setting].	—	—
2	Check the relay board (VI-505) connector for proper connection and correct as necessary.	—	—
3	Change relay board (VI-505).	—	—
4	Change MFPB.	—	—

19.5.216 CD261: USB host board failure

Relevant parts	
MFP board (MFPB)	USB host board (EK-604)

Step	Action	WIRING DIAGRAM	
		Control signal	Location (Electrical component)
1	Check the operation with another USB device.	—	—
2	Check the USB host board connector for proper connection and correct as necessary.	—	—
3	Change USB host board.	—	—
4	Change MFPB.	—	—

19.5.217 CD271: i-Option activated and additional memory not installed

Relevant parts	
MFP board (MFPB)	Memory for i-Option (UK-203)

Step	Action	WIRING DIAGRAM	
		Control signal	Location (Electrical component)
1	Check the memory (UK-203) for proper connection and correct as necessary.	—	—
2	Change memory (UK-203).	—	—
3	Change MFPB.	—	—

1 19.5.218 CD272: i-Option activated and additional memory and HDD not installed

Relevant parts	
MFP board (MFPB) Hard disk	Memory for i-Option (UK-203)

Step	Action	WIRING DIAGRAM	
		Control signal	Location (Electrical component)
1	Check the memory (UK-203) for proper connection and correct as necessary.	—	—
2	Check the HDD for proper connection and correct as necessary.	—	—
3	Change memory (UK-203).	—	—
4	Change HDD	—	—
5	Change MFPB.	—	—

19.5.219 CD401: NACK command incorrect

19.5.220 CD402: ACK command incorrect

19.5.221 CD403: Checksum error

19.5.222 CD404: Receiving packet incorrect

19.5.223 CD405: Receiving packet analysis error

19.5.224 CD406: ACK receiving timeout

19.5.225 CD407: Retransmission timeout

Relevant parts	
MFP board (PRCB)	

Step	Action	WIRING DIAGRAM	
		Control signal	Location (Electrical component)
1	Check whether there is an strong electromagnetic noise source near the main body.	—	—
2	Check the connectors on MFPB for proper connection and correct as necessary.	—	—
3	Change MFPB.	—	—

19.5.226 CE001: Abnormal message queue

19.5.227 CE003: Task error

19.5.228 CE004: Event error

19.5.229 CE005: Memory access error

19.5.230 CE006: Header access error

19.5.231 CE007: DIMM initialize error

Relevant parts	
Printer control board (PRCB)	

Step	Action	WIRING DIAGRAM	
		Control signal	Location (Electrical component)
1	Check the connectors on PRCB for proper connection and correct as necessary.	—	—
2	Change PRCB.	—	—

19.5.232 CD3##: NVRAM data error

- When the data stored due to the NVRAM trouble is lost, backup data can be used for restoration.
- Trouble code [C-D370] will be displayed when multiple errors (over 5) of NVRAM data are detected, which can be restored with one restoration command.
- Data backup will be automatically performed every hour. Backup can also be performed manually with the following setting.
  [Service Mode] → [Enhanced Security] → [NVRAM Data Back Up]
  See P.622

1. When a trouble caused by NVRAM data error occurs, the screen below appears.

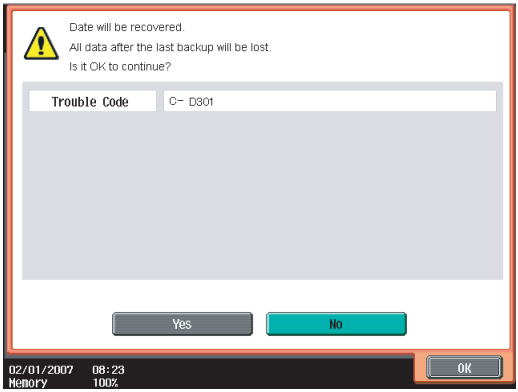

A00JF4E517DA

2. Select [Yes] and touch [OK].
3. The screen will be shifted to the data restoration screen to perform data restoration.

NOTE

- **When the restoration is performed in a short time, data restoration screen may not be displayed.**

4. Check the message which indicates that the data restoration was successfully conducted. Turn OFF the main power switch and turn it ON again more than 10 seconds after.

NOTE

- **In case it failed to restore data, return to the trouble code screen.**

19.5.233 CE002: Message and method parameter failure

Relevant parts	
MFP board (MFPB)	Hard disk

Step	Action	WIRING DIAGRAM	
		Control signal	Location (Electrical component)
1	Turn OFF the main power switch and turn it ON again, and conduct the following setting. [Service Mode] → [System 1] → [Initialization] → [Data Clear]. See P.526	—	—
2	Format hard disk.	—	—
3	Change hard disk.	—	—
4	Change MFPB.	—	—

19.5.234 CEEE1: MFP board malfunction

Relevant parts	
MFP board (MFPB)	

Step	Action	WIRING DIAGRAM	
		Control signal	Location (Electrical component)
1	Check the connectors on MFPB for proper connection and correct as necessary.	—	—
2	Change MFPB	—	—

19.5.235 CEEE2: Scanner section malfunction

Relevant parts	
Exposure unit	CCD board (CCDB) Scanner relay board (REYB/SCAN)

Step	Action	WIRING DIAGRAM	
		Control signal	Location (Electrical component)
1	Correct the connector connection between CCDB and IPB if faulty.	—	—
2	Change REYB/SCAN	—	—
3	Change CCDB	—	—

19.5.236 CEEE3: Printer control board malfunction

Relevant parts	
Printer control board (PRCB)	

Step	Action	WIRING DIAGRAM	
		Control signal	Location (Electrical component)
1	Check the PRCB connector for proper connection and correct as necessary.	—	—
2	Change PRCB	—	—

20. NETWORK ERROR CODE

20.1 Display procedure

- It displays the error code when a network error occurred.
- Network error code is displayed only when the following setting is in "Display."
  [Administrator Settings] → [Network Settings] → [Detail Settings] → [Error Code Display Setting]

20.2 List

Function	Code	Description
IEEE802.1X	1	• Connection has already been established.
	2	• Parameter error.
	3	• Unable to find the destination AP (SSID).
	4	• The authentication mode does not match the AP (IEEE8021X/WPA-EAP/ WPA-PSK/NONE).
	5	• Negotiation of the EAP method failed.
	6	• The EAP authentication failed (user ID, password, certificate, etc.)
	7	• Encryption negotiation with the AP failed (TKIP/CCMP).
	8	• Failed to retrieve the client certificate.
	9	• The client certificate has expired.
	10	• Verification error of the server certificate (EAP-TLS/EAP-TTLS/PEAP).
	11	• Although the WPA-PSK mode is selected, the Pre-Shared Key is not specified.
	12	• An authentication error occurred in the WPA-PSK mode (un-matched Pre-Shared Key).
	13	• The phase 2 method is not specified (PEAP).
	14	• Negotiation of the phase 2 method failed (PEAP).
	15	• Response from the server has timed out.
	16	• Failed to allocate memory.
	17	• Failed to start the supplicant task.
	18	• The driver does not work.
	19	• The server certificate has expired (EAP-TLS/EAP-TTLS/PEAP).
	20	• CA verification error of the server certificate (EAP-TLS/EAP-TTLS/ PEAP).
	21	• Server ID verification error of the server certificate (EAP-TLS/EAP-TTLS/ PEAP).
	22	• The CA certificate is not specified (EAP-TLS/EAP-TTLS/PEAP).
	23	• The server ID is not specified (EAP-TLS/EAP-TTLS/PEAP).
	24	• The setting combination is correct.
	25	• Connection and authentication are complete.
	26	• The server certificate does not have the expected usage (EAP-TLS/EAP-TTLS/PEAP).
	27	• The server certificate has expired (EAP-TLS/EAP-TTLS/PEAP).
	28	• Access to the server to check for expiration of the server certificate is rejected (EAP-TLS/EAP-TTLS/PEAP).

Function	Code	Description
IEEE802.1X	29	• Access to the server to check for expiration of the server certificate has timed out (EAP-TLS/EAP-TTLS/PEAP).
	30	• Unable to check for expiration because the CRL size that has been retrieved to check for the expiration of the server certificate exceeds the maximum capacity that can be retained (1MB) (EAP-TLS/EAP-TTLS/PEAP).
	31	• Incorrect format of the server certificate (EAP-TLS/EAP-TTLS/PEAP).
	32	• Verification of the server certificate is invalid (EAP-TLS/EAP-TTLS/PEAP).
	33	• Although the environment is configured to use the HDD, it is unable to perform verification because the HDD path has not been specified (EAP-TLS/EAP-TTLS/PEAP).
	34	• Unable to perform verification because there are too many certificates to be verified (the maximum number of certificates that can be verified at a time is 20) (EAP-TLS/EAP-TTLS/PEAP).
	35	• Parameter error of the certificate (EAP-TLS/EAP-TTLS/PEAP).
	36	• Internal error of the certificate verification (EAP-TLS/EAP-TTLS/PEAP).
LDAP	1	• An invalid operation occurred.
	4	• The number of search results has exceeded the maximum number of items allowed.
	7	• The LDAP server does not support SASL.
	10	• Unable to trace the link although Referral is specified.
	32	• Cannot find the search route.
	49	• Failed to log in to the LDAP server.
	80	• An unexpected error occurred.
	85	• The connection has timed out.
	86	• The supported SASL does not match the LDAP server side.
	88	• Cancelled by the user.
	90	• A memory shortage occurred.
	91	• Unable to connect to the LDAP server.
	92	• The supported LDAP version does not match the LDAP server side.
	128	• Failed to resolve the LDAP server name using the DNS server.
	129	• The certificate of the LDAP server has expired.
	130	• Mutual authentication using GSS-SPNEGO (Kerberos v5) failed.
	131	• The search result remains.
	2238	• The CN field of the LDAP server certificate does not match the server address.
	2239	• The LDAP server certificate does not have the expected usage for a server.
	2240	• The LDAP server certificate is not trusted. • To trust the certificate, the certificate must be registered to the system.
	2241	• The LDAP server certificate has expired.
	2242	• The CA server rejected the connection.
	2243	• The connection to the server that checks for expiration of the certificate has timed out.

Function	Code	Description
LDAP	2244	• Unable to check for expiration because the CRL size exceeds the maximum capacity that can be retained (1MB).
	2261	• The format of the LDAP server certificate is invalid.
	2263	• Although the environment is configured to use the HDD, it is unable to perform verification because the HDD path has not been specified.
	2264	• Unable to perform verification because there are too many certificates to be verified (the maximum number of certificates that can be verified at a time is 20).
	2266	• Internal error of the certificate verification.
	2267	• The device certificate does not exist.
	2268	• No certificate is sent from the server.
E-Mail/ Internet Fax	1	• Failed to log in to the E-mail server.
	2	• An internal error occurred.
	3	• Failed to connect to the server.
	4	• The connection has timed out.
	5	• Decoding failed due to invalid MIME format or S/MIME format.
	6	• Available free memory is insufficient. Reception is not possible.
	9	• Failed to delete an E-mail message.
	10	• The mail box is full.
	11	• Failed to search the certificate.
	12	• Failed to retrieve the device certificate or private key.
	13	• An I/O error occurred. • An HDD operation error occurred, or memory capacity of the computer may be insufficient.
	14	• The S/MIME function is disabled.
	15	• The HDD is disabled.
	16	• The format of the certificate from the E-mail sender is invalid.
	2236	• The certificate has expired, or the validity period has not yet started.
	2238	• The CN field of the certificate does not match the server address.
	2239	• The certificate does not have the expected usage.
	2240	• The certificate is not trusted. To trust the certificate, the certificate must be registered to the system.
	2241	• The certificate has expired.
	2242	• The CA server rejected the connection.
	2243	• The connection to the server that checks for expiration of the certificate has timed out.
	2244	• Unable to check for expiration because the CRL size exceeds the maximum capacity that can be retained (1MB).
	2261	• The format of the certificate is invalid.
	2263	• Failed to initialize the certificate verification.
	2264	• Unable to perform verification because there are too many certificates to be verified (the maximum number of certificates that can be verified at a time is 20).
	2266	• Internal error of the certificate verification.
	2267	• The device certificate does not exist.

Function	Code	Description
E-Mail/ Internet Fax	2268	• No certificate is sent from the server.
FTP transmission	22	• Parameter error (e.g. the file name is NULL).
	27	• Parameter is invalid.
	42	• The specified protocol is unavailable.
	52	• The process is cancelled by a device reset.
	55	• A buffer shortage occurred.
	56	• The FTP connection is already open.
	57	• Failed to connect to the server.
	60	• The connection has timed out.
	61	• The connection has been interrupted.
	62	• The device is not connected to the network.
	70	• The network connection is busy.
	450	• The file has not been deleted.
	451	• The file transfer failed (e.g. due to insufficient server capacity).
	452	• The file transfer failed (e.g. due to insufficient server capacity).
	530	• Incorrect login name or password.
	550	• The specified folder does not exist.
	552	• The file operation failed (e.g. due to insufficient server capacity).
SMB transmission	42	• The specified protocol is unavailable.
	52	• The process is cancelled by a device reset.
	55	• A buffer shortage occurred.
	57	• Failed to connect to the server.
	62	• The device is not connected to the network. • The connection has been interrupted.
	70	• The network connection is busy.
	4096	• The host name is not specified. • The specified host name does not exist on the network.
	4097	• The user name is not specified. • Unable to log in with the specified user name and password. • The user does not have write permission to the folder. • Failed to log in due to an SMB protocol error.
	4098	• The folder name is not specified. • The specified folder does not exist.
	4099	• The user name is not specified. • Unable to log in with the specified user name and password. • The user does not have write permission to the folder. • Failed to log in due to an SMB protocol error.
	4100	• The specified file name is invalid.
	4101	• The specified file already exists and is write-protected. • The folder and the disk are write-protected.
	4102	• The specified media to be written is not formatted. • The file system of the specified media to be written is faulty.
	4103	• The server capacity is full.
	4104	• The server capacity has become full while writing data.

Function	Code	Description
SMB transmission	4105	• Other errors to which an error code is not assigned.
	10000	• Failed in authentication using a PKI card.
	12236	• The certificate has expired, or the validity period has not yet started.
	12239	• The certificate does not have the expected usage.
	12240	• The certificate is not trusted. To trust the certificate, the certificate must be registered to the system.
	12241	• The certificate has expired.
	12242	• The CA server rejected the connection.
	12243	• The connection to the server that checks for expiration of the certificate has timed out.
	12244	• Unable to check for expiration because the CRL size exceeds the maximum capacity that can be retained (1 MB).
	12263	• Although the environment is configured to use the HDD, it is unable to perform verification because the HDD path has not been specified.
	12264	• Unable to perform verification because there are too many certificates to be verified (the maximum number of certificates that can be verified at a time is 20).
	12266	• Internal error of the certificate verification.
	12267	• The device certificate does not exist.
	12268	• No certificate is sent from the server.
SMTP transmission	22	• Invalid argument.
	27	• The file size is too large.
	28	• Insufficient memory of the device.
	32	• The pipe is broken.
	42	• The specified protocol is unavailable.
	51	• Unable to reach the destination network.
	52	• The connection aborted by the network.
	55	• A buffer shortage occurred.
	57	• The socket is not connected.
	58	• The connection has been interrupted.
	60	• The operation has timed out.
	61	• The connection is rejected.
	62	• The device is not connected to the network.
	67	• The host is shut down.
	70	• The operation is expected to be blocked.
	421	• SMTP server error. Since the service is unavailable, the transfer channel is closed.
	432	• SMTP server error. The password must be changed.
	450	• SMTP server error. Unable to access to the mail box.
	451	• SMTP server error. The requested action has been cancelled because an error occurred while processing a job.
	452	• SMTP server error. Shortage of the system storage capacity.
	453	• SMTP server error. No E-mail massage.

Function	Code	Description
SMTP transmission	454	• SMTP server error. Temporary authentication failure.
	458	• SMTP server error. Unable to queue a message to the node.
	459	• SMTP server error. The node is not permitted.
	499	• SMTP server error. An unsupported SMTP error code of 400s is received from the SMTP server.
	500	• SMTP server error. Syntax error (command unrecognized).
	501	• SMTP server error. Syntax error in parameters or arguments.
	502	• SMTP server error. The command is not implemented.
	503	• SMTP server error. Bad sequence of commands.
	504	• SMTP server error. The command parameter is not implemented.
	521	• SMTP server error. The server does not receive E-mail messages.
	530	• SMTP server error. The access is rejected.
	534	• SMTP server error. The authentication mechanism is too weak.
	535	• SMTP server error. Authentication error.
	538	• SMTP server error. The requested authentication mechanism requires encryption.
	550	• SMTP server error. The requested action is not executed.
	551	• SMTP server error. The user is not connected locally.
	552	• SMTP server error. The requested E-mail action is cancelled.
	553	• SMTP server error. The requested action is not accepted.
	554	• An SMTP server error, or an internal error when sending data. The transaction failed.
	555	• SMTP server error. MAIL/RCPT parameter error.
	599	• SMTP server error. An unsupported SMTP error code of 500s is received from the SMTP server.
	2236	• The certificate has expired, or the validity period has not yet started.
	2238	• The CN field of the certificate does not match the server address.
	2239	• The certificate does not have the expected usage.
	2240	• The certificate is not trusted. • To trust the certificate, the certificate must be registered to the system.
	2241	• The certificate has expired.
	2242	• The CA server rejected the connection.
	2243	• The connection to the server that checks for expiration of the certificate has timed out.
	2244	• Unable to check for expiration because the CRL size exceeds the maximum capacity that can be retained (1MB).
	2261	• The format of the certificate is invalid.
	2263	• Failed to initialize the certificate verification.
	2264	• Unable to perform verification because there are too many certificates to be verified (the maximum number of certificates that can be verified at a time is 20).
	2266	• Internal error of the certificate verification.
	2267	• The device certificate does not exist.

Function	Code	Description
SMTP transmission	2268	• No certificate is sent from the server.
	3000	• An unexpected error occurred.
	3001	• An unexpected error occurred within the library being used.
	3002	• An invalid channel is specified.
	3003	• SMTP server address is invalid.
	3004	• Parameter error (MIMEBodyHeader).
	3005	• Parameter error (DisplayName).
	3006	• Parameter error (character set).
	3007	• Parameter error (From address).
	3008	• Parameter error (To address).
	3009	• Parameter error (CC address).
	3010	• Parameter error (BCC address).
	3011	• Parameter error (pEmailSet is NULL).
	3012	• Parameter error (destination certificate is NULL).
	3013	• Parameter error (E-mail body).
	3014	• The HDD is disabled.
	3015	• The S/MIME function is disabled.
	3016	• The device certificate cannot be used in S/MIME (e.g. self-signed certificate error, the private key type is not RSA).
	3018	• An invalid encryption algorithm is specified.
	3019	• An invalid signature algorithm is specified.
	3020	• The E-mail address included in the destination certificate does not match the destination address (To/Cc/Bcc).
	3021	• The E-mail address included in the certificate does not match the sender (From) address.
	3022	• Format error of the certificate.
	3023	• Parameter error (Disposition-Notification-To).
	3024	• Message syntax error of the receiver side.
	3025	• The SMTP server does not support the STARTTLS command.
WebDAV transmission	22	• The format of the URL of the target resource is invalid. • Parameter error.
	27	• Attempted to send data that exceeds the maximum transferrable size for transfer coding.
	42	• The specified protocol is unavailable.
	52	• The process is cancelled by a device reset.
	55	• A buffer shortage occurred.
	56	• The connection has already been established.
	57	• The connection to the WebDAV server failed (including connection time out).
	62	• The device is not connected to the network.
	70	• The network connection is busy.
	72	• The connection has been interrupted with the condition that is insufficient to the specified size.
	401	• Authentication error.

Function	Code	Description
WebDAV transmission	407	• Proxy authentication error.
	1001	• The server does not support WebDAV. • Unable to upload data to the server.
	1002	• The intermediate resource is not a collection (directory) (e.g. the specified folder does not exist).
	1003	• The target resource is a collection (directory).
	1011	• Although “https” is specified for the resource URL, it is unavailable because the SSL library is not included for the modularity.
	1012	• Although “https” is specified for the resource URL, the connection is interrupted because the WebDAV server certificate has expired.
	1013	• The CONNECT method is issued to the proxy server to establish an SSL connection via a proxy, but it is rejected.
	1017	• A communication error occurred while sending a request.
	1018	• A communication error occurred while receiving a response.
	1027	• nContentLength exceeds the maximum transferable size.
	1030	• Although use of a proxy has been specified, the proxy setting information is unavailable.
	1031	• The connection to the proxy server failed (including connection time out).
△1	1098	• Failed in chunk TX to SharePoint Server.
	1099	• Other internal error occurred (e.g. memory shortage).
	2236	• The certificate has expired, or the validity period has not yet started.
	2238	• The CN field of the certificate does not match the server address.
	2239	• The certificate does not have the expected usage.
	2240	• The certificate is not trusted. • To trust the certificate, the certificate must be registered to the system.
	2241	• The certificate has expired.
	2242	• The CA server rejected the connection.
	2243	• The connection to the server that checks for expiration of the certificate has timed out.
	2244	• Unable to check for expiration because the CRL size exceeds the maximum capacity that can be retained (1MB).
	2261	• The format of the certificate is invalid.
	2263	• Failed to initialize the certificate verification.
	2264	• Unable to perform verification because there are too many certificates to be verified (the maximum number of certificates that can be verified at a time is 20).
	2266	• Internal error of the certificate verification.
	2267	• The device certificate does not exist.
	2268	• No certificate is sent from the server.

Function	Code	Description
SMB browsing	32	• The connection has been interrupted.
	42	• The specified protocol is unavailable.
	57	• Failed to connect to the server.
	62	• The device is not connected to the network. • The internal channel detected an error immediately before establishing communication.
	67	• The host is shut down.
	4096	• The group name/host name is not specified. • The specified group name/host name does not exist on the network.
	4097	• The user name is not specified. • Unable to log in with the specified user name and password. • Failed to log in due to an SMB protocol error.
	4098	• Administrative shares do not exist. • The shared resource name is not specified. • The shared resource does not exist.
	4099	• The user name is not specified. • Unable to log in with the specified user name and password. • Failed to log in due to an SMB protocol error.
	4102	• The specified media to be written is not formatted. • The file system of the specified media to be written is faulty.
	4105	• Other errors to which an error code is not assigned.
	4352	• The browser machine (master browser/backup browser) is not found.
	4353	• Unable to log in to the browser machine (master browser/backup browser).
	4354	• The sub folder does not exist.
	4355	• The request is not accepted due to an invalid call sequence etc.
	4368	• The number of groups is too large.
	4369	• The number of host PCs is too large.
	4370	• The number of shared resources is too large.
1	10000	• Failed in authentication using a PKI card.
1	12236	• The certificate has expired, or the validity period has not yet started.
1	12239	• The certificate does not have the expected usage.
1	12240	• The certificate is not trusted. To trust the certificate, the certificate must be registered to the system.
1	12241	• The certificate has expired.
1	12242	• The CA server rejected the connection.
1	12243	• The connection to the server that checks for expiration of the certificate has timed out.
1	12244	• Unable to check for expiration because the CRL size exceeds the maximum capacity that can be retained (1 MB).
1	12263	• Although the environment is configured to use the HDD, it is unable to perform verification because the HDD path has not been specified.
1	12264	• Unable to perform verification because there are too many certificates to be verified (the maximum number of certificates that can be verified at a time is 20).
1	12266	• Internal error of the certificate verification.

	Function	Code	Description
1	SMB browsing	12267	• The device certificate does not exist.
1		12268	• No certificate is sent from the server.
	User authentication	1	• Invalid parameter (e.g. the number of characters exceeds the limit, blank). • The authentication function setting is disabled.
		2	• Failed to resolve the name using the DNS server.
		3	• Unable to find the authentication server.
		4	• Failed to authenticate.
		5	• Failed to allocate memory. • An unexpected error occurred (which does not occur under normal usage conditions).
		6	• An authentication request is received while an internal task of the user authentication client is being performed.
		7	• The connection was interrupted while the user authentication was being performed.
1		10000	• Failed in authentication using a PKI card.
1		12236	• The certificate has expired, or the validity period has not yet started.
1		12239	• The certificate does not have the expected usage.
1		12240	• The certificate is not trusted. To trust the certificate, the certificate must be registered to the system.
1		12241	• The certificate has expired.
1		12242	• The CA server rejected the connection.
1		12243	• The connection to the server that checks for expiration of the certificate has timed out.
1		12244	• Unable to check for expiration because the CRL size exceeds the maximum capacity that can be retained (1 MB).
1		12261	• The format of the certificate is invalid.
1		12263	• Although the environment is configured to use the HDD, it is unable to perform verification because the HDD path has not been specified.
1		12264	• Unable to perform verification because there are too many certificates to be verified (the maximum number of certificates that can be verified at a time is 20).
1		12266	• Internal error of the certificate verification.
	WebDAV client	2	• The ID of the client that is not opened is specified.
		3	• The reception has timed out.
		4	• A reception error occurred. • An invalid request URL is specified.
		5	• Content-Length or the received data size exceeds the maximum transferable size. • The size of the message body is too large.
		6	• The process is cancelled by a device reset. • The size of the message body exceeds the maximum transferable size.
		7	• An internal error occurred. • The process is cancelled by an internal reset.
		8	• Failed to connect to the WebDAV server.
		9	• An error occurred while sending data to the WebDAV server.

Function	Code	Description
WebDAV client	10	• A timeout occurred while sending data to the WebDAV server.
	11	• Failed to connect to the proxy server.
	12	• The proxy server rejected the connection request.
	13	• Although use of a proxy has been specified, the proxy setting in-formation is unavailable.
	14	• Failed to authenticate the proxy server.
	15	• Other error was returned from the proxy server.
	16	• An internal error occurred.
	17	• The process is cancelled because MIO_REQBODY_ERROR is specified by the device application.
	2236	• The certificate has expired, or the validity period has not yet started.
	2238	• The CN field of the certificate does not match the server address.
	2239	• The certificate does not have the expected usage.
	2240	• The certificate is not trusted. • To trust the certificate, the certificate must be registered to the system.
	2241	• The certificate has expired.
	2242	• The CA server rejected the connection.
	2243	• The connection to the server that checks for expiration of the certificate has timed out.
	2244	• Unable to check for expiration because the CRL size exceeds the maximum capacity that can be retained (1MB).
	2261	• The format of the certificate is invalid.
	2263	• Failed to initialize the certificate verification.
	2264	• Unable to perform verification because there are too many certificates to be verified (the maximum number of certificates that can be verified at a time is 20).
	2266	• Internal error of the certificate verification.
	2267	• The device certificate does not exist.
	2268	• No certificate is sent from the server.
WS scan	1	• The specified client is not registered.
	2	• Parameter is invalid.
	3	• The Web service or WS scan function is disabled.
	4	• The device is not connected to the network.
	5	• Waiting for connection from CP.
	6	• The certificate of the destination computer is not valid when the validity period of a certificate is checked.
	22	• Invalid argument.
	42	• The specified protocol is unavailable.
	52	• The connection aborted by the network.
	53	• The connection has been interrupted.
	55	• A buffer shortage occurred.
	57	• The socket is not connected.
	60	• The operation has timed out.
	70	• The operation is expected to be blocked.

Function	Code	Description
WS scan	72	• The RetrieveImage waiting period has timed out.
	2236	• The certificate has expired, or the validity period has not yet started.
	2238	• The CN field of the certificate does not match the server address.
	2239	• The certificate does not have the expected usage.
	2240	• The certificate is not trusted. • To trust the certificate, the certificate must be registered to the system.
	2241	• The certificate has expired.
	2242	• The CA server rejected the connection.
	2243	• The connection to the server that checks for expiration of the certificate has timed out.
	2244	• Unable to check for expiration because the CRL size exceeds the maximum capacity that can be retained (1MB).
	2261	• The format of the certificate is invalid.
	2263	• Although the environment is configured to use the HDD, it is unable to perform verification because the HDD path has not been specified.
	2264	• Unable to perform verification because there are too many certificates to be verified (the maximum number of certificates that can be verified at a time is 20).
	2265	• Parameter of the certificate verification is invalid.
	2266	• Internal error of the certificate verification.
	2267	• The device certificate does not exist.
	2268	• No certificate is sent from the server.

21. POWER SUPPLY TROUBLE

21.1 Machine is not energized at all (DCPU operation check)

Relevant parts	
Main switch (SW1) Printer control board (PRCB)	DC power supply (DCPU)

Step	Check item	WIRING DIAGRAM (Location)	Result	Action
1	Check that the fusing unit is securely plugged in. (Only for bizhub C652)	—	NO	Reconnect.
2	Is a power voltage supplied across PJ001DCPU-1 and 2 on DCPU?	K-24	NO	Check the WIRING from the wall outlet to SW1 PJ001.
3	Are the fuses on DCPU conducting?	—	NO	Change DCPU.
4	Is DC24 V being output from PJ10DCPU-4 on DCPU?	I-25 to 26	NO	Change DCPU.
5	Is DC5 V being input to PJ011DCPU-5 to 7 on DCPU?	I-26 to 27	NO	Change DCPU.
6	Is DC5 V being input to CN12PRCB-5 on the printer control board? (LED on PRCB does not blink.)	H-24	NO	Change DCPU.
			YES	Change PRCB.

21.2 Fusing heaters do not operate

Relevant parts	
Right door switch (MS1) Fusing unit	DC power supply (DCPU) IH power supply (IHPU) Relay drive board (REDB)

Step	Check item	WIRING DIAGRAM (Location)	Result	Action
1	Is the power source voltage applied across PJ002DCPU-1 to 4 on DCPU? During this time, the right door should be closed.	K-24	NO	Check wiring from power outlet to MS1 to REDB to PJ002.
2	Is the power source voltage applied across CN1IHPU-1 to 4 on IHPU?	Y-19	NO	Check wiring from power outlet to REDB to CN1.
3	Is the power source voltage applied across CN259<C>-3 and 4?	C-18	YES	Fusing unit
			NO	Change DCPU.

21.3 Power is not supplied to ADF

Step	Check item	WIRING DIAGRAM (Location)	Result	Action
1	Is DC24 V being output from CN610 on ADF?	Q-21	YES	Malfunction in ADF
2	Is DC24 V being output from PJ013-3 on DCPU?	K-26	NO	Check wiring from DCPU to ADF.
3	Is the fuse on DCPU conducting?	—	YES	Change DCPU.
			NO	Malfunction in DF-611

21.4 Power is not supplied to option

21.4.1 LU-204/301

Step	Check item	WIRING DIAGRAM (Location)	Result	Action
1	Is DC24 V being applied to hookup connector CN425?	W-12 to 13	NO	Malfunction in LU-204/301
2	Is DC24 V being output from CN19 on PFTDB?	U-12 to 13	NO	Check wiring from PFTDB to CN19 to LU-204/301.
3	Is the fuse on DCPU conducting?	—	YES	Change DCPU.
			NO	Malfunction in LU-204/301

21.4.2 FS-526/527

Step	Check item	WIRING DIAGRAM (Location)	Result	Action
1	Are DC24 V being applied to CN331<L>?	L-26	NO	Malfunction in finisher.
2	Are DC24 V being applied to PJ006-3 on DCPU?	K-26	NO	Check wiring from DCPU to finisher.
3	Is the fuse on DCPU conducting?	—	YES	Change DCPU.
			NO	Malfunction in finisher.

22. IMAGE QUALITY PROBLEM

22.1 How to read element date

- As part of troubleshooting procedures, the numeric values set for “State Confirmation” available from “Service Mode” can be used to isolate the cause of the image problem.

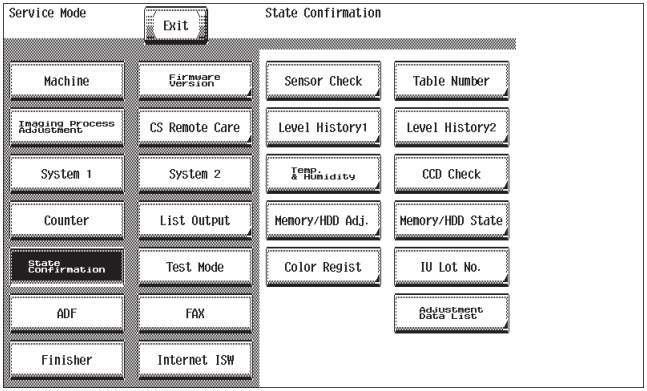

A0P0F4E515DA

22.1.1 Table number

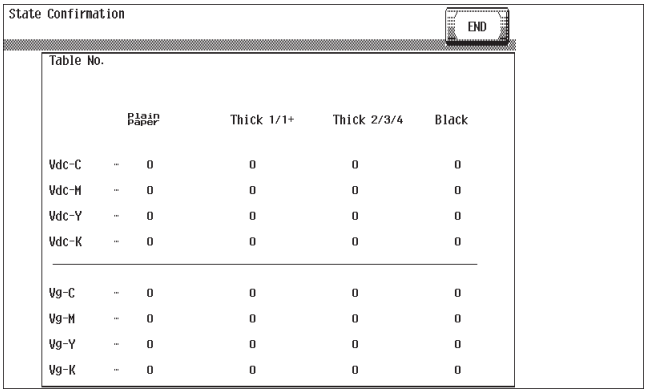

A0P0F4E516DA

Vdc-C Vdc-M Vdc-Y Vdc-K	• Shows the developing bias value of each color of toner when an image is produced. • Standard values: around 400 V (200 V to 800 V) • A correction is made to make the image lighter when the numeric value is greater. • A correction is made to make the image darker when the numeric value is smaller. • Relevant components: Imaging unit, high voltage unit/1 (HV1)
Vg-C Vg-M Vg-Y Vg-K	• Shows the grid voltage value of each color of toner when an image is produced. • Standard values: around 500 V (200 V to 800 V) • A correction is made to make the image lighter when the numeric value is greater. • A correction is made to make the image darker when the numeric value is smaller. • Relevant components: Imaging unit, high voltage unit/1 (HV1)

22.1.2 Level history 1

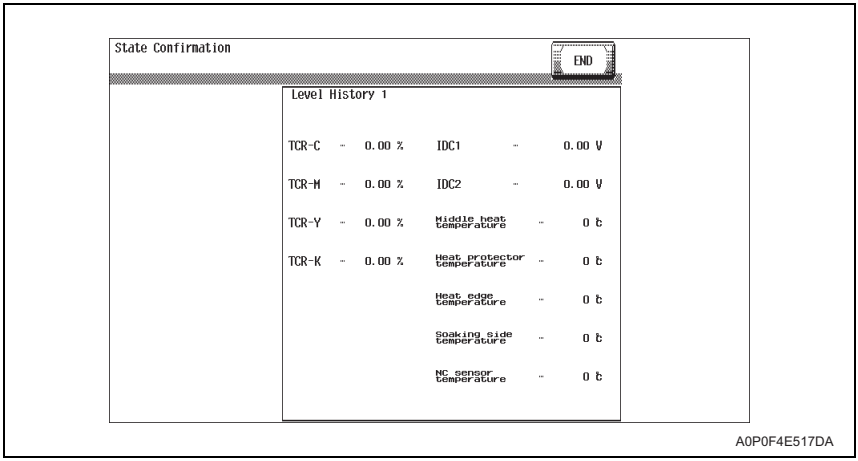

TCR-C TCR-M TCR-Y TCR-K	• Shows the T/C ratio (in 0.01 % increments). • Standard value: 6 to 8 % • Relevant components: TCR sensor
IDC1 IDC2	• Shows the IDC bare surface output value (in 0.01 V increments). • It should normally be around 4.3 V. • The output range is 0 V to 5 V. • Relevant components: IDC sensor, transfer belt unit
Middle heat temperature Heat. Protect Temperature Heat edge temperature Soaking side temperature NC sensor temperature	• Shows the temperature of the each part of the fusing unit (in 1 °C increments). • Relevant components: Fusing unit

22.1.3 Level history 2

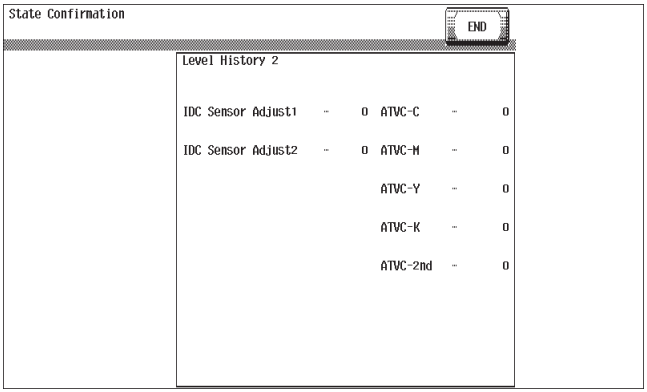

A0P0F4E518DA

IDC Sensor Adjust 1 IDC Sensor Adjust 2	• Shows the IDC intensity adjustment value. • It should normally be around 40 and can range from 0 to 255. • The value becomes greater as the transfer belt unit has been used more. • Relevant components: IDC sensor, transfer belt unit
ATVC -C ATVC -M ATVC -Y ATVC -K ATVC -2nd	• Shows the latest ATVC level (which varies according to the paper type). • 10 μA to 100 μA (ATVC-C/-M/-Y/-K) • 300 V to 5000 V (ATVC-2nd) • Relevant components: Transfer belt unit, High voltage unit/2 (HV2), 2nd transfer assy

22.2 How to identify problematic part

- This chapter is divided into two parts: “Initial check items” and “Troubleshooting procedure by a particular image quality problem.”
- When an image quality problem occurs, first go through the “Initial check items” and, if the cause is yet to be identified, go to “Troubleshooting procedure by a particular image quality problem.”

22.2.1 Initial check items

A. Initial check items 1

- Check first to see if image data is properly transmitted between scanner and memory, and between memory and printer.

Action	Result	Next Step
Enter the Service Mode, select [State Confirmation] → [Memory/HDD Adj.] → [Memory Bus Check], and select and carry out [Scanner→Memory] and [Memory→PRT] checks. **NOTE** • **For the bus check as the internal process between the scanner and the memory, there are two types, “scanner internal check” and “check for the scanner and the memory.” NG1 or NG2 is displayed depending on the type of NG detected.**	OK	Initial check items 2
	NG	P.820 (action as instructed)

B. Initial check items 2

- Let the machine produce a test print and determine whether the image problem is attributable to the scanner or printer system.

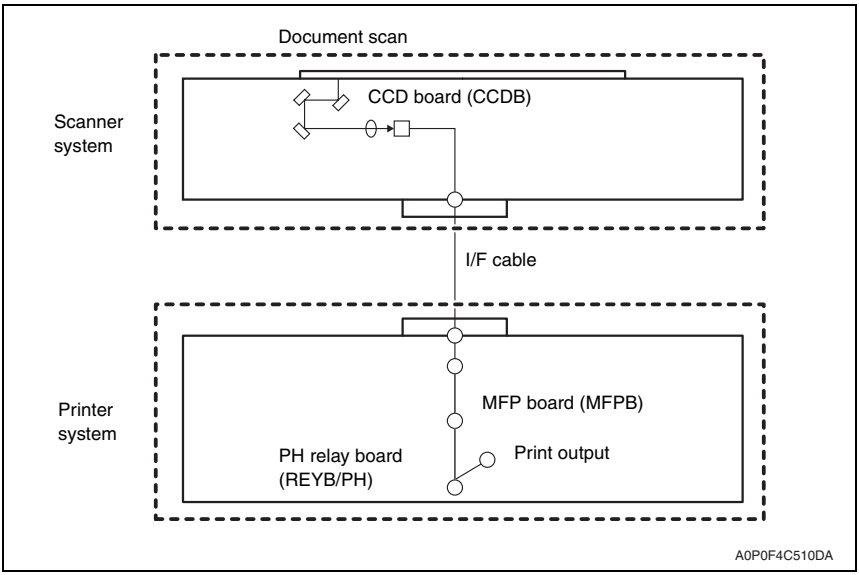

- Evaluation procedure

Image problem	Action	Result	Cause	Next step
Lines, bands	From [Service Mode], select [Test Mode] → [Halftone Pattern] → [SINGLE] → [HYPER] → [Gradation] → [C→M→Y→K] → [Density 64], and produce a test print. Is image problem evident?	YES	Printer	Initial check items 3
		NO	Scanner	P.862

C. Initial check items 3

- If the printer is responsible for the image problem, let the machine produce a test print and determine whether the image problem occurs in a specific single color or four colors

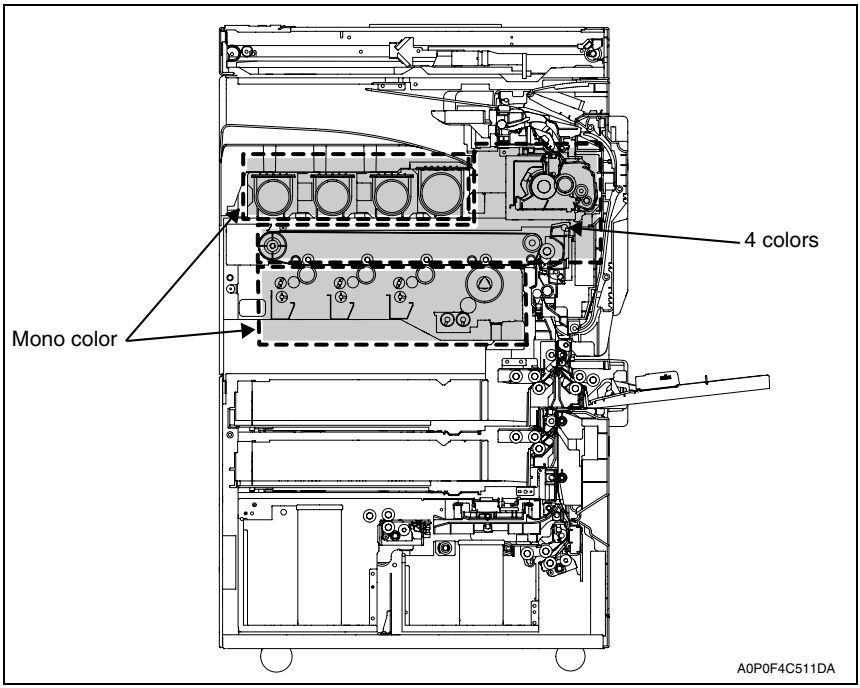

- Evaluation procedure

Image problem	Action	Result	Cause	Next step
Lines, bands	From [Service Mode], select [Test Mode] → [Halftone Pattern] → [SINGLE] → [HYPER] → [Gradation] → [C→M→Y→K] → [Density 64], and produce a test print. Is image problem evident in each of all four colors?	YES	Printer, 4 colors	P.891
		NO	Printer, single color	P.877

22.3 Solution

NOTE

- **Typical faulty image samples shown in the following are all printed with A3 setting.**

22.3.1 Scanner system: white lines, white bands, colored lines and colored bands in sub scan direction

A. Typical faulty images

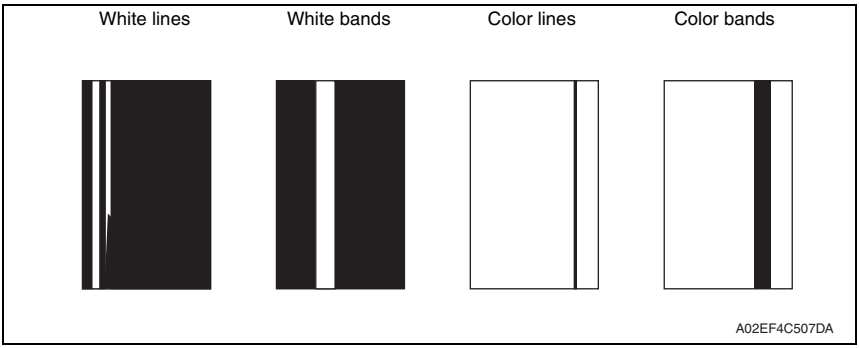

B. Troubleshooting procedure

(1) When the original glass is used

Step	Section	Check item	Result	Action
1	Original	Original is damaged or dirty.	YES	Change original.
2	ADF	Original pad is dirty.	YES	Clean.
3	Original glass	Original glass is dirty.	YES	Wipe the surface clean with a soft cloth.
4	Shading sheet	Shading sheet is dirty.	YES	Wipe the surface clean with a soft cloth.
5	Mirror, lens, exposure Lamp, and reflectors	Mirror is dirty	YES	Clean.
		Lens is dirty	YES	Clean.
		Exposure lamp is dirty	YES	Clean.
		Reflectors are dirty	YES	Clean.
6	Machine → Scan Area → Image Position: Side Edge (Service Mode)	The adjustment value for [Image Position: Side Edge] falls within the specified range.	NO	Readjust.
7		The white lines/bands or colored lines/bands are blurry.	YES	Change exposure unit. Change CCD unit.

(2) When the ADF is used

Step	Section	Check item	Result	Action
1	Original	Original is damaged or dirty.	YES	Change original.
2	ADF reading section	Glass is dirty.	YES	Clean.
3	ADF scanning guide	ADF scanning guide is damaged or dirty.	YES	Clean.
4	Shading sheet	Shading sheet is dirty.	YES	Wipe the surface clean with a soft cloth.
5	Mirror, lens, exposure lamp, and reflectors	Mirror is dirty	YES	Clean.
		Lens is dirty	YES	Clean.
		Exposure lamp is dirty	YES	Clean.
		Reflectors are dirty	YES	Clean.
6	ADF → Original Stop Position (Service Mode)	The adjustment value for [Main Scanning Direction] falls within the specified range.	NO	Readjust.
7	Glass step sheet for the original glass moving unit	The glass step sheet is tilted.	YES	Readjust.
8	ADF read position	The white lines/bands or colored lines/bands occurs when reading the original from ADF.	YES	Readjust.
9		The white lines/bands or colored lines/bands are blurry.	YES	Change exposure unit. Change CCD unit.

22.3.2 Scanner system: white lines, white bands, colored lines and colored bands in main scan direction

A. Typical faulty images

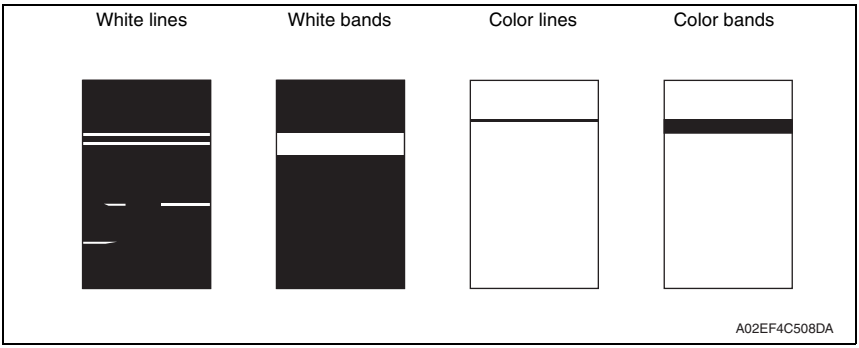

B. Troubleshooting procedure

Step	Section	Check item	Result	Action
1	Original	Original is damaged or dirty.	YES	Change original.
2	ADF	Original pad is dirty.	YES	Clean.
3	Original glass	Original glass is dirty.	YES	Wipe the surface clean with a soft cloth.
4	Machine → Scan Area → Image Position: Top Edge (Service Mode)	The adjustment value for [Image Position: Leading Edge] falls within the specified range.	NO	Readjust.
5		The problem has been eliminated through the checks of steps up to 4.	NO	Change exposure unit. Change CCD unit.

22.3.3 Scanner system: color spots

A. Typical faulty images

A02EF4C509DA

B. Troubleshooting procedure

Step	Section	Check item	Result	Action
1	Original	Original is damaged or dirty.	YES	Change original.
2	ADF	Original pad is dirty.	YES	Clean.
3	Original glass	Original glass is dirty.	YES	Wipe the surface clean with a soft cloth.
4		The problem has been eliminated through the checks of steps up to 3.	NO	Change exposure unit. Change CCD unit.

22.3.4 Scanner system: fog

A. Typical faulty images

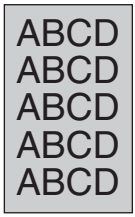

A02EF4C510DA

B. Troubleshooting procedure

Step	Section	Check item	Result	Action
1	Original	Original is damaged or dirty.	YES	Change original.
2	ADF	Original pad is dirty.	YES	Clean.
3		ADF does not lie flat.	YES	Change ADF if it is deformed or hinges are broken.
4	Original glass	Original glass is dirty.	YES	Wipe the surface clean with a soft cloth.
5	Shading sheet	Shading sheet is dirty.	YES	Wipe the surface clean with a soft cloth.
6	Mirror, lens, exposure lamp, and reflectors	Mirror is dirty.	YES	Clean.
7		Lens is dirty.	YES	Clean.
8		Exposure lamp is dirty.	YES	Clean.
9		Reflectors are dirty.	YES	Clean.
10	Basic screen Quality/Density	The problem is eliminated when the image is produced in the manual exposure setting.	NO	Try another exposure level in manual.
11		The problem has been eliminated through the checks of steps up to 10.	NO	Change exposure unit. Change CCD unit.

22.3.5 Scanner system: blurred image, blotchy image

A. Typical faulty images

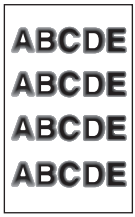

A02EF4C511DA

B. Troubleshooting procedure

Step	Section	Check item	Result	Action
1	Original	Original does not lie flat.	YES	Change original.
2	ADF	ADF does not lie flat.	YES	Change ADF if it is deformed or hinges are broken.
3	Original glass	Original glass tilts.	YES	Position original glass correctly. Check original loading position.
4	2nd/3rd mirrors carriage	Exposure unit is not aligned with the 2nd/3rd mirrors carriage.	YES	Perform “Focus Positioning of the scanner and 2nd/3rd mirrors carriage” and “Scanner Position Adjustment.”
5		The problem has been eliminated through the checks of steps up to 4.	NO	Change exposure unit. Change CCD unit.

22.3.6 Scanner system: incorrect color image registration, sync shift (lines in main scan direction)

A. Typical faulty images

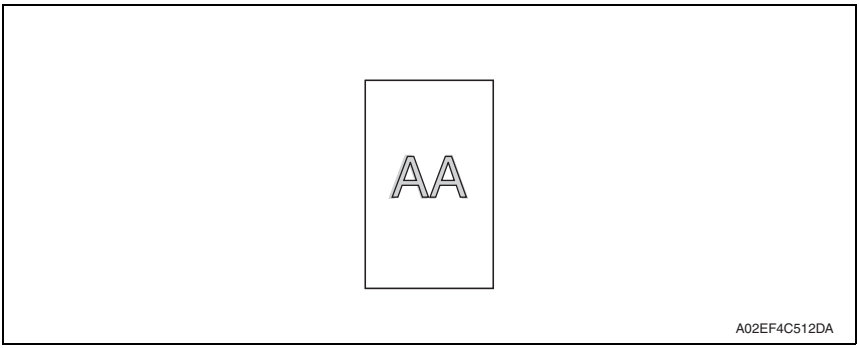

B. Troubleshooting procedure

Step	Section	Check item	Result	Action
1	Original	Original does not lie flat.	YES	Change original.
2	ADF	ADF does not lie flat.	YES	Change ADF if it is deformed or hinges are broken.
3	Scanner rails	Foreign matter on rails.	YES	Clean and apply lubricant.
4	Drive cables	Cable kinks or is damaged.	YES	Correct or change.
5	Exposure unit	Scanner moves smoothly.	NO	Adjust the scanner motor timing belt. → Change bushing. → Change scanner motor. → Change scanner relay board.
6		The problem has been eliminated through the checks of steps up to 5.	NO	Change CCD unit.

22.3.7 Scanner system: moire

A. Typical faulty images

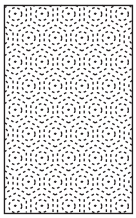

A02EF4C513DA

B. Troubleshooting procedure

Step	Section	Check item	Result	Action
1	Original	Moire distortions recur even after the orientation of original has been changed.	NO	Change the original mode (select one other than that resulted in moire).
2	Basic screen Quality/Density	Moire distortions recur even after the original mode has been changed.	YES	Select “Text Mode” or “Photo Mode”.
3	Basic screen Zoom	The problem has been eliminated through the checks of steps up to 2.	NO	Change the zoom ratio.

22.3.8 Scanner system: skewed image

A. Typical faulty images

A02EF4C514DA

B. Troubleshooting procedure

Step	Section	Check item	Result	Action
1	Original	Original is skew.	YES	Reposition original.
2	Original glass	Original glass is in positive contact with the flat spring without being tilt.	NO	Reinstall the glass. Check the original loading position.
3	2nd/3rd mirrors carriage	Exposure unit is not properly aligned with 2nd/3rd mirrors carriage.	YES	Perform “Focus Positioning of the scanner and 2nd/3rd mirrors carriage” and “Scanner Position Adjustment.”
4		The problem has been eliminated through the checks of steps up to 3.	NO	Change exposure unit. Change CCD unit.

22.3.9 Scanner system: distorted image

A. Typical faulty images

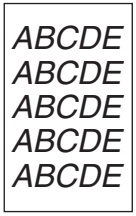

A02EF4C515DA

B. Troubleshooting procedure

Step	Section	Check item	Result	Action
1	Installation	Machine is installed on a level surface.	NO	Reinstall.
2	2nd/3rd mirrors carriage	Exposure unit is not properly aligned with 2nd/3rd mirrors carriage.	YES	Perform “Focus positioning of the scanner and 2nd/3rd mirrors carriage” and “Scanner Position Adjustment.”
3		The problem has been eliminated through the checks of steps up to 2.	NO	Change exposure unit. Change CCD unit.

22.3.10 Scanner system: low image density, rough image

A. Typical faulty images

A02EF4C516DA

B. Troubleshooting procedure

Step	Section	Check item	Result	Action
1	Original glass	Original Glass is dirty.	YES	Wipe the surface clean with a soft cloth.
2	Shading sheet	Shading sheet is dirty.	YES	Wipe the surface clean with a soft cloth.
3	Mirror, lens, exposure lamp, and reflectors	Mirror is dirty.	YES	Clean.
4		Lens is dirty.	YES	Clean.
5		Exposure lamp is dirty.	YES	Clean.
6		Reflectors are dirty.	YES	Clean.
7		The problem has been eliminated through the checks of steps up to 6.	NO	Clean exposure lamp. → Change exposure unit. → Change CCD unit.

22.3.11 Scanner system: defective ACS

A. Typical faulty images

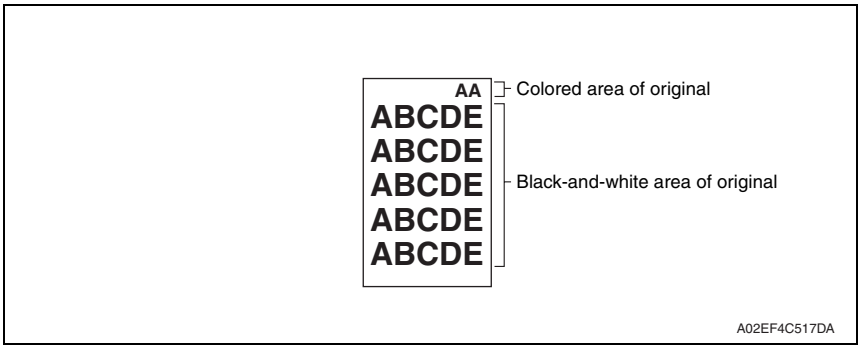

B. Troubleshooting procedure

Step	Section	Check item	Result	Action
1	Auto Color Level Adjustment [User Setting]	The problem persists even after the ACS determination level adjust function has been changed.	YES	Change the original loading direction. Make manual settings according to the type of original. (If the original contains a colored area in one of its corners, the machine may fail to properly detect the colored area.)

22.3.12 Scanner system: blank copy, black copy

A. Typical faulty images

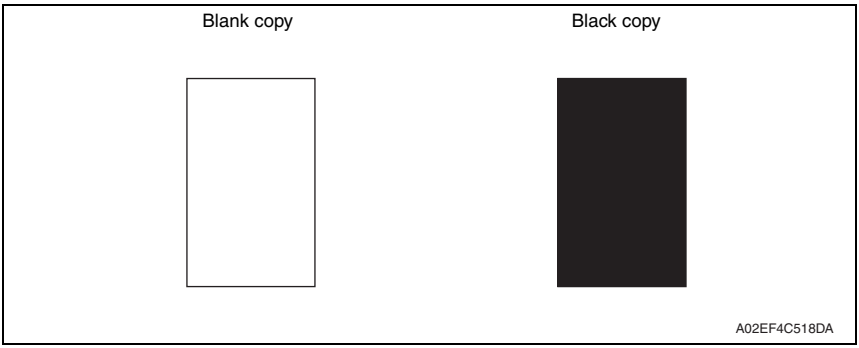

B. Troubleshooting procedure

Step	Section	Check item	Result	Action
1	Cable connecting scanner and printer	Connector is connected properly with no pins bent.	NO	Reconnect.
2	Image processing board (IPB)	Connectors on the image processing board are connected properly.	NO	Reconnect.
3	CCD Unit	Connectors of the CCD unit are connected properly.	NO	Reconnect.
4	Test Mode [Service Mode]	The problem is eliminated as checked with the image on a test pattern produced.	NO	Change I/F connection cable.
5	MFP board (MFPB)	The problem is eliminated after the I/F connection cable has been changed.	NO	Change MFP board.

22.3.13 Scanner system: abnormal image

A. Typical faulty images

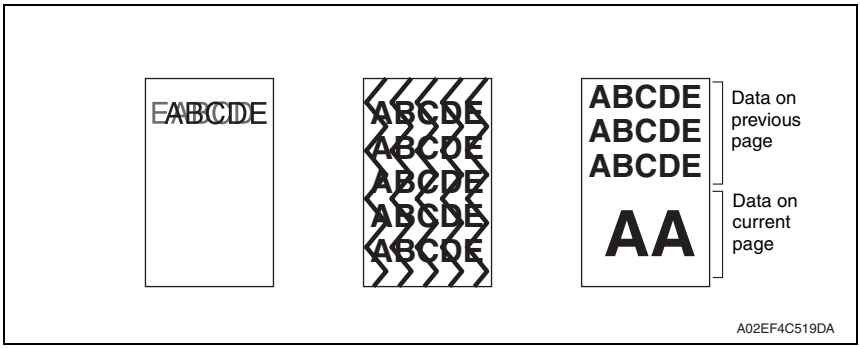

B. Troubleshooting procedure

Step	Section	Check item	Result	Action
1	Cable connecting scanner and printer	Connector is connected properly with no pins bent.	NO	Reconnect.
2	MFP board (MFPB)	Connectors on the MFP board are connected properly.	NO	Reconnect.
3	MFP board (MFPB)	Data on previous page is mixed with data on current page.	NO	Reinstall the memory.
4	Test Mode [Service Mode]	The problem is eliminated as checked with the image on a test pattern produced.	NO	Change interface connection cable.
5	MFP board (MFPB)	The problem is eliminated after the interface connection cable has been changed.	NO	Change MFP board.
6	Printer control board (PRCB) PH relay board (REYB/PH)	Check the connection of connectors, harness, and flat cables between PRCB and REYB/PH, and correct if necessary.	NO	Change printer control board. Change PH relay board.

22.3.14 Scanner system: uneven density

A. Typical faulty images

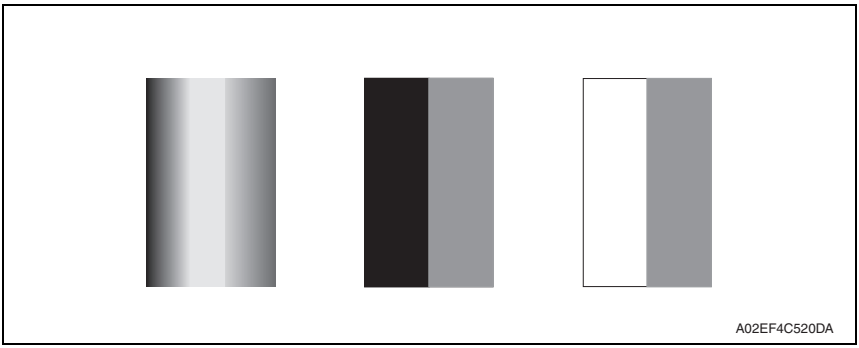

B. Troubleshooting procedure

(1) When the original glass is used

Step	Section	Check item	Result	Action
1	2nd/3rd mirrors carriage	Exposure unit is not properly aligned with 2nd/3rd mirrors carriage.	YES	Perform “Focus positioning of the scanner and 2nd/3rd mirrors carriage” and “Scanner Position Adjustment.”
2	Scanner motor	Scanner motor turns smoothly.	NO	Change belt. Change scanner motor.
3		The problem has been eliminated through the checks of steps up to 2.	NO	Change exposure unit. Change CCD unit.

(2) When the ADF is used

Step	Section	Check item	Result	Action
1	ADF read position	The uneven density occurs when reading the original from ADF.	YES	Readjust.
2	Guide support for the original glass moving unit	Guide support is tilted.	YES	Readjust.
3	Original glass moving unit	The original glass moving unit is tilted.	YES	Readjust.

22.3.15 Printer monocolor: white lines, white bands, colored lines and colored bands in sub scan direction

A. Typical faulty images

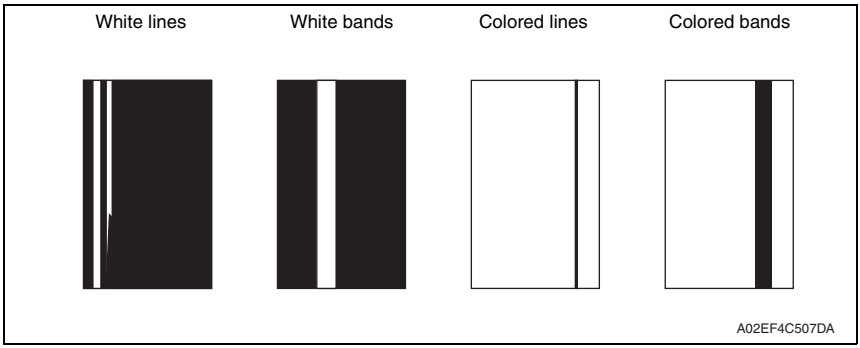

B. Troubleshooting procedure

Step	Section	Check item	Result	Action
1	Image check	A white line or black line in sub scan direction is sharp.	YES	Clean the electrostatic charger wire.
2		When printing thick paper, black lines appear.	YES	Select [Service Mode] → [Machine] → [Thick Paper Mode] and set [Image Quality].
3	Imaging unit	The surface of the PC drum is scratched.	YES	Change imaging unit.
4		Dirty on the outside.	YES	Clean.
5		Contact terminals make good connection between each IU and machine.	NO	Clean contact terminals.
6		Developing bias contact terminal makes good connection.	NO	Clean contact terminal and check terminal position.
7	PH unit	The surface of the PH window is dirty.	YES	Clean with cleaning jig.
8		The problem has been eliminated through the checks of steps up to 7.	NO	Change imaging unit. → Change image transfer belt unit. → Change PH unit.

22.3.16 Printer monocolor: white lines, white bands, colored lines and colored bands in main scan direction

A. Typical faulty images

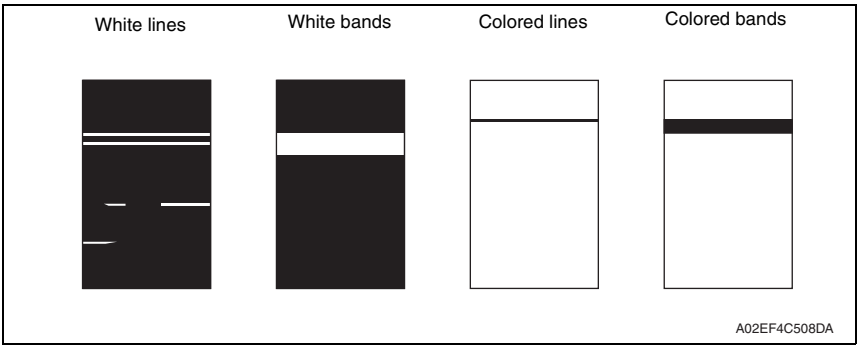

B. Troubleshooting procedure

Step	Section	Check item	Result	Action
1	Image check	A white line or black line in main scan direction is sharp.	NO	Clean the electrostatic charger wire.
2	Imaging unit	The surface of the PC drum is scratched.	YES	Change imaging unit.
3		Dirty on the outside.	YES	Clean.
4		Contact terminals make good connection between each IU and machine.	NO	Clean contact terminals.
5		Developing bias contact terminal makes good connection.	NO	Clean contact terminal and check terminal position.
6	PH unit	The surface of the PH window is dirty.	YES	Clean with cleaning jig.
7		The problem has been eliminated through the checks of steps up to 6.	NO	Change imaging unit. → Change image transfer belt unit. → Change PH unit.

22.3.17 Printer monocolor: uneven density in sub scan direction

A. Typical faulty images

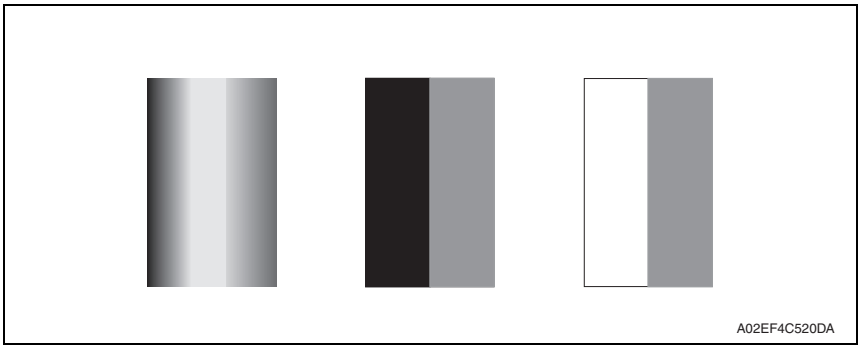

B. Troubleshooting procedure

Step	Section	Check item	Result	Action
1	High image density original	Uneven density in sub scan direction occurs at a pitch of 40 mm to 50 mm when a multi-copy cycle is run using an original with high image density (50% or more).	YES	Feed 10 to 20 blank sheets of paper with no originals placed, as the IU fails to keep up with a high demand for toner.
2	Machine → LD adjustment → LD lightness balance adjust. (Service Mode)	The problem has been eliminated through the LD lightness balance adjust.	NO	Go to next step.
3	Imaging unit	The surface of the PC drum is scratched.	YES	Change imaging unit.
4		Dirty on the outside.	YES	Clean.
5	PH unit	The surface of the PH window is dirty.	YES	Clean with cleaning jig.
6	Transfer belt unit	Is abnormality found in the cam gear?	YES	Change transfer belt unit.
7		The problem has been eliminated through the checks of steps up to 6.	NO	Change IU. → Change PH unit. → Change High voltage unit/2.

22.3.18 Printer monocolor: uneven density in main scan direction

A. Typical faulty images

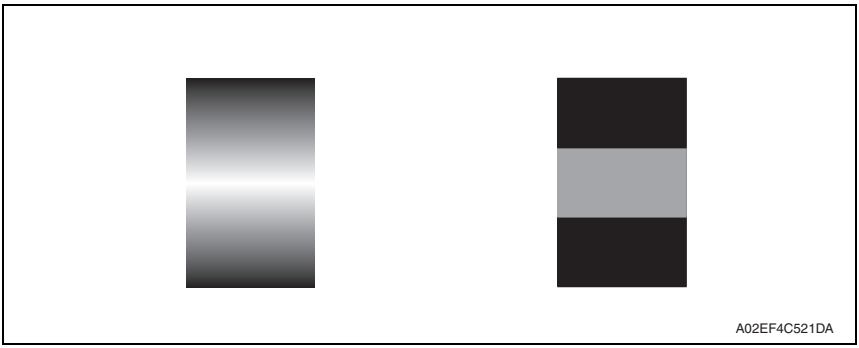

B. Troubleshooting procedure

Step	Section	Check item	Result	Action
1	Machine → LD adjustment → LD lightness balance adjust. (Service Mode)	The problem has been eliminated through the LD lightness balance adjust.	NO	Go to next step.
2	Imaging unit	The surface of the PC drum is scratched.	YES	Change imaging unit.
3		Dirty on the outside.	YES	Clean.
4	PH unit	The surface of the PH window is dirty.	YES	Clean with cleaning jig.
5	Transfer roller	Check that the spring does not come off during the pressure operation of the transfer roller.	NO	Correct. Change transfer roller unit.
6	Transfer belt unit	Transfer belt unit makes positive contact with plates on rails.	NO	Check and correct contacts.
7		Is abnormality found in the cam gear?	YES	Change image transfer belt unit.
8		The problem has been eliminated through the checks of steps up to 7.	NO	Change imaging unit. → Change PH unit. → Change high voltage unit/2.

22.3.19 Printer monocolor: low image density

A. Typical faulty images

A02EF4C516DA

B. Troubleshooting procedure

Step	Section	Check item	Result	Action
1	Warning display	The maintenance call mark is displayed on the panel.	YES	Take action according to the warning code shown on the state confirm screen.
2	State Confirm → Table Number (Service Mode)	Check data for Vg and Vdc. Color Vdc: around 400 V Vg : around 500 V Black Vdc: around 400 V Vg : around 500 V	—	Go to next step.
3	State Confirmation → Level History 1 (Service Mode)	Check TCR data. (specified rang: 6 to 8 %)	NO	Go to next step.
4		IDC output value is around 4.3 V.	NO	Clean IDC sensor and execute the image stabilization. Check image transfer belt for damage and correct as necessary.
5	Level history data check results	Low TCR and low Vg and Vdc	YES	Go to step 10.
6		Low TCR and high Vg and Vdc	YES	Go to step 14.
7		TCR falling within specified range and low Vg and Vdc	YES	Go to step 10.
8		TCR falling within specified range and high Vg and Vdc	YES	Go to step 14.
9		The situations other than the above-mentioned.	YES	Go to step 10.
10	Imaging unit	Dirty on the outside.	YES	Clean.
11	PH unit	The surface of the PH window is dirty.	YES	Clean with cleaning jig.
12	Transfer belt unit	Transfer belt unit makes positive contact with plates on rails.	NO	Check and correct contacts.
13		Is abnormality found in the cam gear?	YES	Change image transfer belt unit.

Step	Section	Check item	Result	Action
14	Hopper unit	Connectors are loose.	YES	Reconnect.
15		Gear is cracked.	YES	Change gear.
16	Image Process Adjustment → TCR Toner Supply (Service Mode)	Toner is properly supplied when TCR toner supply is run.	NO	Go to next step.
17	Image Process Adjustment →Gradation Adjust (Service Mode)	"Conv. Value" falls within the specified range as checked through gradation adjust. Dark: 0 ± 100 Highlight: 0 ± 60	YES	Go to step 20.
18	Image Process Adjustment → D Max Density (Service Mode)	The problem has been eliminated through the adjust of D Max.	NO	Go to next step.
19	Image Process Adjustment → Stabilizer → Initialize + Image Stabilization (Service Mode)	After the Initialize + Image Stabilization sequence has been completed, run gradation adjust.	NO	Go to next step.
20		The problem has been eliminated through the checks of steps up to 19.	NO	Change imaging unit. → Change printer control board →Change PH unit. →Change high voltage unit/2.

22.3.20 Printer monocolor: gradation reproduction failure

A. Typical faulty images

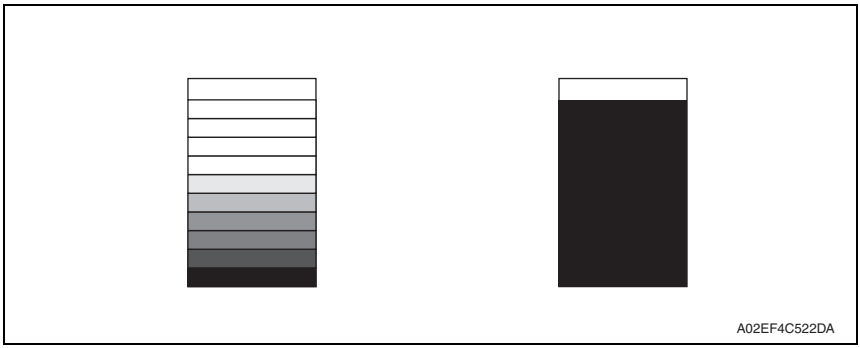

B. Troubleshooting procedure

Step	Section	Check item	Result	Action
1	Warning display	The maintenance call mark is displayed on the panel.	YES	Take action according to the warning code shown on the state confirm screen.
2	Photo/density	Original type and screen pattern are selected properly.	NO	Change screen pattern.
3	Imaging unit	Dirty on the outside.	YES	Clean.
4	PH unit	The surface of the PH window is dirty.	YES	Clean with cleaning jig.
5	State Confirmation → Level History 1 (Service Mode)	IDC output value is around 4.3 V.	NO	Clean IDC sensor and execute the image stabilization. Check image transfer belt for damage and correct as necessary.
6	Image Process Adjustment →Gradation Adjust (Service Mode)	"Conv. Value" falls within the specified range as checked through gradation adjust. Dark: 0 ± 100 Highlight: 0 ± 60	YES	Go to step 9.
7	Image Process Adjustment → D Max Density (Service Mode)	The problem has been eliminated through the adjust of D Max.	NO	Go to next step.
8	Image Process Adjustment → Stabilizer → Initialize + Image Stabilization (Service Mode)	After the Initialize + Image Stabilization sequence has been completed, run gradation adjust;	NO	Go to next step.
9		The problem has been eliminated through the checks of steps up to 8.	NO	Change imaging unit. → Change printer control board → Change PH unit. → Change high voltage unit/2.

22.3.21 Printer monocolor: foggy background

A. Typical faulty images

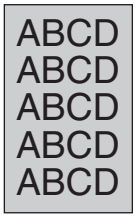

A02EF4C510DA

B. Troubleshooting procedure

Step	Section	Check item	Result	Action
1	Warning display	The maintenance call mark is displayed on the panel.	YES	Take action according to the warning code shown on the state confirm screen.
2	State Confirmation → Table Number (Service Mode)	Check data for Vg and Vdc. Color Vdc: around 400 V Vg : around 500 V Black Vdc: around 400 V Vg : around 500 V	NO	Go to next step.
3	State Confirmation → Level History 1 (Service Mode)	Check TCR data. (specified rang: 6 to 8 %)	NO	Go to next step.
4		IDC output value is around 4.3 V.	NO	Clean IDC sensor and execute the image stabilization. Check image transfer belt for damage and correct as necessary.
5	Level history data check results	Low TCR and low Vg and Vdc	YES	Go to step 10.
6		Low TCR and high Vg and Vdc	YES	Go to step 12.
7		TCR falling within specified range and low Vg and Vdc	YES	Go to step 10.
8		TCR falling within specified range and high Vg and Vdc	YES	Go to step 12.
9		The situations other than the above-mentioned.	YES	Go to step 10.
10	Imaging unit	Dirty on the outside.	YES	Clean.
11	PH unit	The surface of the PH window is dirty.	YES	Clean with cleaning jig.
12	Image Process Adjustment → Background Voltage Margin (Service Mode)	The problem is eliminated after background voltage margin has been adjusted.	NO	Go to next step.

Step	Section	Check item	Result	Action
13	Image Process Adjustment →Gradation Adjust (Service Mode)	"Conv. Value" falls within the specified range as checked through gradation adjust. Dark: 0 ± 100 Highlight: 0 ± 60	YES	Go to step 17.
14	Image Process Adjustment → D Max Density (Service Mode)	The problem has been eliminated through the adjust of D Max.	NO	Go to next step.
15	Image Process Adjustment → Stabilizer → Initialize + Image Stabilization (Service Mode)	After the Initialize + Image Stabilization sequence has been completed, run gradation adjust.	NO	Go to next step.
16	Printer control board (PRCB) PH relay board (REYB/PH)	Check the connection of connectors, harness, and flat cables between PRCB and REYB/PH, and correct if necessary.	NO	Change printer control board. Change PH relay board.
17		The problem has been eliminated through the checks of steps up to 16.	NO	Change imaging unit. → Change PH unit. → Change high voltage unit/2.

22.3.22 Printer monocolor: void areas, white spots

A. Typical faulty images

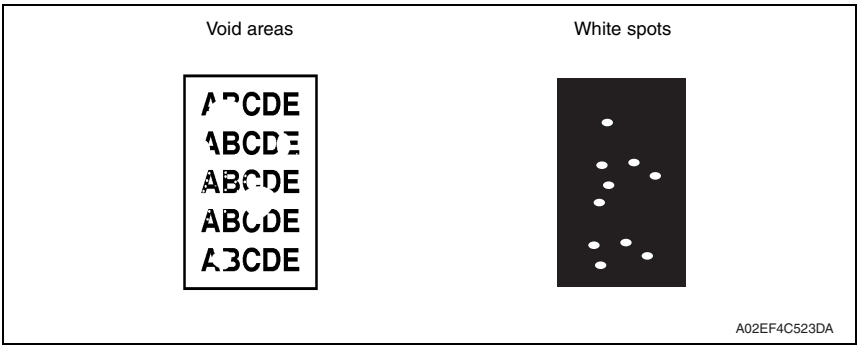

B. Troubleshooting procedure

Step	Section	Check item	Result	Action
1	Image Check	There are void areas at the front side or high density section.	YES	See P.881
2		There is void area at the rear side section.	YES	Perform [Transfer Adjust] of [Image Process Adjustment] under Service Mode.
3	Imaging unit	The surface of the PC drum is scratched.	YES	Change imaging unit.
4		Dirty on the outside.	YES	Clean.
5	Toner cartridge	Foreign matter or caked toner in the toner cartridge.	YES	Remove foreign matter.
6	Installation environment	Is the atmospheric pressure at the installation site low?	YES	Make the following adjustment: [Service Mode] → [Image Process Adjustment] → [Dev. Bias Choice].

22.3.23 Printer monocolor: colored spots

A. Typical faulty images

A02EF4C524DA

B. Troubleshooting procedure

Step	Section	Check item	Result	Action
1	Imaging unit	Developing bias contact terminal makes good connection.	NO	Clean contact terminal and check terminal position.
2		The surface of the PC drum is scratched.	YES	Change imaging unit.
3		Dirty on the outside.	YES	Clean.

22.3.24 Printer monocolor: blurred image

A. Typical faulty images

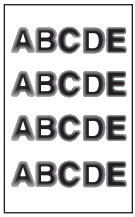

A02EF4C511DA

B. Troubleshooting procedure

Step	Section	Check item	Result	Action
1	PH unit	The surface of the PH window is dirty.	YES	Clean with cleaning jig.
2	Imaging unit	Dirty on the outside.	YES	Clean.
3		The problem has been eliminated through the checks of steps up to 2.	NO	Change imaging unit. → Change PH unit.

22.3.25 Printer monocolor: blank copy, black copy

A. Typical faulty images

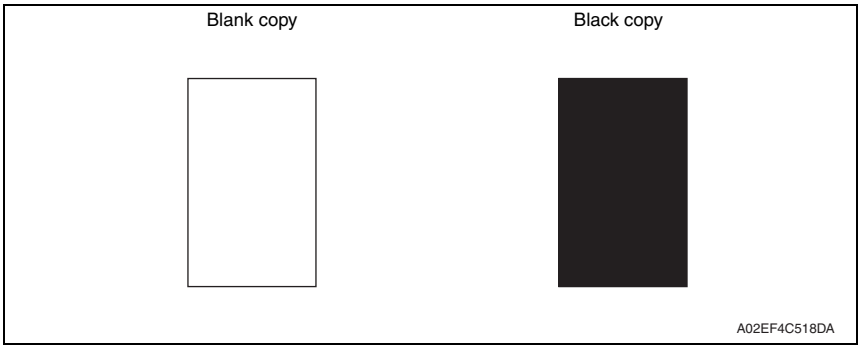

B. Troubleshooting procedure

Step	Section	Check item	Result	Action
1	Image check	A blank copy occurs.	YES	Check PH unit connector for proper connection.
2	Imaging unit	Coupling of IU drive mechanism is installed properly.	NO	Check and correct drive transmitting coupling. Change IU.
3		The PC drum charge corona voltage contact or PC drum ground contact of the imaging unit is connected properly.	NO	Check, clean, or correct the contact.
4	High voltage unit/1	Connector is connected properly.	NO	Reconnect.
5		The problem has been eliminated through the check of step 4.	NO	Change high voltage unit/1. → Change printer control board → Change PH unit.

22.3.26 Printer monocolor: uneven image

A. Typical faulty images

A02EF4C525DA

B. Troubleshooting procedure

Step	Section	Check item	Result	Action
1	Toner cartridge	The toner cartridge of every color is surely installed.	NO	Re-install it.
2	PH unit	The PH unit is surely installed.	NO	Re-install it.
3	Toner cartridge	There is any stain or breakage on the drive section of the toner cartridge.	YES	Clean/replace the toner cartridge.
4	Imaging unit	There is any stain, damage or abrasion on the PC drum.	YES	Replace the imaging unit.
5	Transfer roller	There is any stain, damage, deformation or abrasion on the transfer roller.	YES	Replace the transfer roller.
6	Fusing unit	There is any stain, damage, deformation or abrasion on the roller and drive section of the fusing unit.	YES	Replace the fusing unit.
7		The problem has been eliminated through the check of step 6.	NO	Replace the image transfer belt unit.

22.3.27 Printer 4-color: white lines, white bands, colored lines and colored bands in sub scan direction

A. Typical faulty images

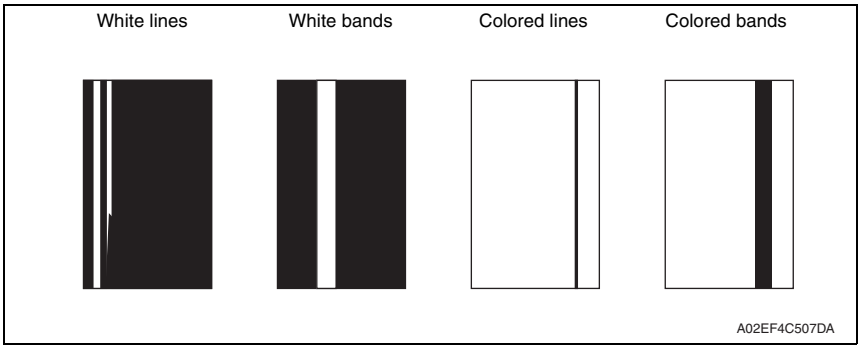

B. Troubleshooting procedure

Step	Section	Check item	Result	Action
1	Image check	A white line or colored line in sub scan direction.	YES	Clean the comb electrode.
2	Transfer belt unit	Fingerprints, oil, or other foreign matter is evident on the transfer belt.	YES	Clean with specified solvent. (See Maintenance.)
3		Transfer belt is dirty or scratched.	YES	Clean dirty belt with a soft cloth. Change transfer belt unit if belt is damaged.
4		Cleaning blade is not effective in removing toner completely.	YES	Clean cleaning blade. Change transfer belt unit.
5	Transfer roller unit	Transfer roller is dirty or scratched.	YES	Change transfer roller unit.
6	Paper path	There is foreign matter on paper path.	YES	Remove foreign matter.
7		Image transfer paper separator fingers are damaged or dirty.	YES	Clean or change.
8	Fusing unit	Fusing entrance guide plate is dirty or damaged.	YES	Clean. Change fusing unit.
9		Fusing paper separator fingers are dirty.	YES	Clean.
10		The problem has been eliminated through the checks of steps up to 9.	NO	Change printer control board

22.3.28 Printer 4-color: white lines, white bands, colored lines and colored bands in main scan direction

A. Typical faulty images

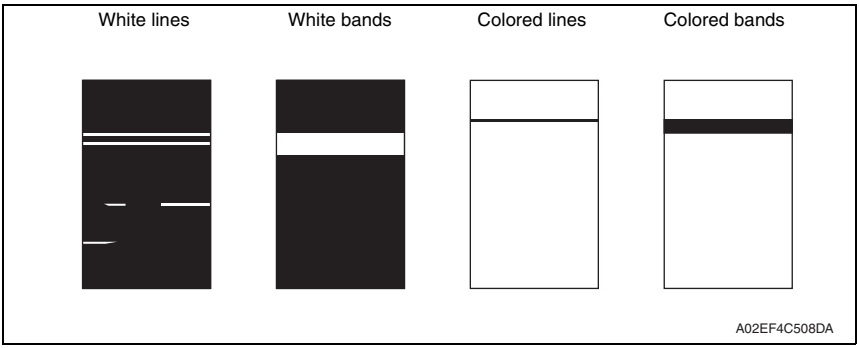

B. Troubleshooting procedure

Step	Section	Check item	Result	Action
1	Transfer belt unit	Fingerprints, oil, or other foreign matter is evident on the transfer belt.	YES	Clean with specified solvent. (See Maintenance.)
2		Transfer belt is dirty or scratched.	YES	Clean dirty belt with a soft cloth. Change transfer belt unit if belt is damaged.
3		Cleaning brush is not effective in removing toner completely.	YES	Clean cleaning brush. Change transfer belt unit.
4	Transfer roller unit	Transfer roller is dirty or scratched.	YES	Change transfer roller unit.
5	Paper path	There is foreign matter on paper path.	YES	Remove foreign matter.
6		Image transfer paper separator fingers are damaged or dirty.	YES	Clean or change.
7	Fusing unit	Fusing entrance guide plate is dirty or damaged.	YES	Clean. Change fusing unit.
8		Fusing paper separator fingers are dirty.	YES	Clean.
9	Neutralizing brush	The resistance values between the neutralizing brush and the ground terminal is not ∞.	NO	Check the contact. Change neutralizing brush.
10		The problem has been eliminated through the checks of steps up to 9.	NO	Change printer control board

22.3.29 Printer 4-color: uneven density in sub scan direction

A. Typical faulty images

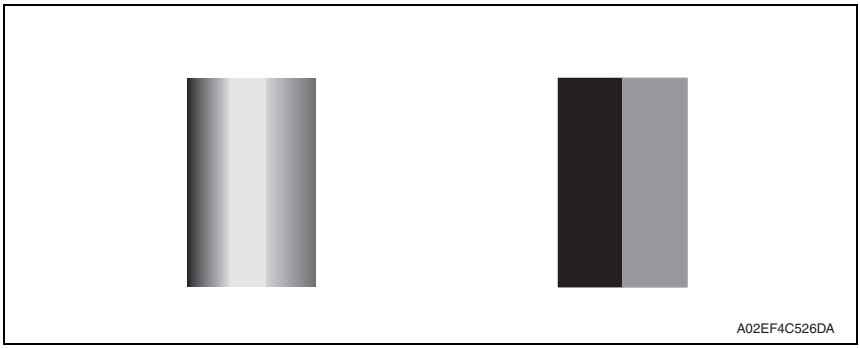

B. Troubleshooting procedure

Step	Section	Check item	Result	Action
1	Transfer belt unit	Fingerprints, oil, or other foreign matter is evident on the transfer belt.	YES	Clean with specified solvent. (See Maintenance.)
2		Transfer belt is dirty or scratched.	YES	Clean dirty belt with a soft cloth. Change transfer belt unit if belt is damaged.
3		Terminal is dirty.	YES	Clean.
4	Transfer roller unit	Image transfer roller is installed properly.	NO	Reinstall.
5		Image transfer roller is dirty or scratched.	YES	Change transfer roller unit.
6		The problem has been eliminated through the checks of steps up to 5.	NO	Change transfer belt unit.

22.3.30 Printer 4-color: uneven density in main scan direction

A. Typical faulty images

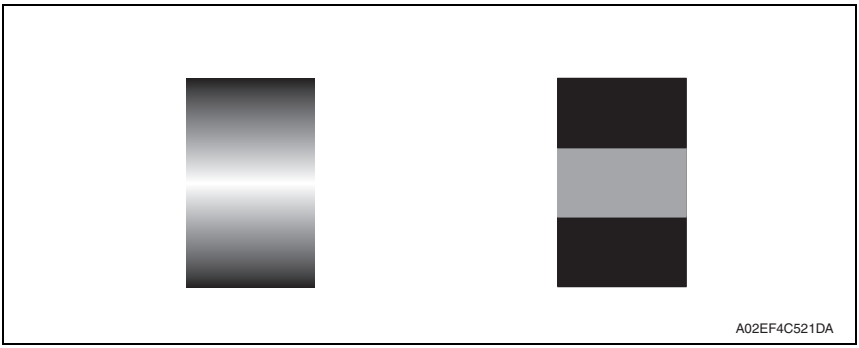

B. Troubleshooting procedure

Step	Section	Check item	Result	Action
1	Transfer belt unit	Fingerprints, oil, or other foreign matter is evident on the transfer belt.	YES	Clean with specified solvent. (See Maintenance.)
2		Transfer belt is dirty or scratched.	YES	Clean dirty belt with a soft cloth. Change transfer belt unit if belt is damaged.
3		Terminal is dirty.	YES	Clean.
4	Transfer roller unit	Image transfer roller is installed properly.	NO	Reinstall.
5		Image transfer roller is dirty or scratched.	YES	Change transfer roller unit.
6		The problem has been eliminated through the checks of steps up to 5.	NO	Change transfer belt unit. → Change high voltage unit/2.

22.3.31 Printer 4-color: low image density

A. Typical faulty images

A02EF4C516DA

B. Troubleshooting procedure

Step	Section	Check item	Result	Action
1	Paper	Paper is damp.	YES	Change paper to one just unwrapped from its package.
2	Transfer belt unit	Terminal is dirty.	YES	Clean.
3	Transfer roller unit	Transfer roller is installed properly.	NO	Reinstall.
4		Charge neutralizing needle is not separated and ground terminal is connected properly.	NO	Correct or change.
5	IDC sensor	Sensor is dirty.	YES	Clean IDC sensor and execute the image stabilization.
6	Image Process Adjustment →Gradation Adjust (Service Mode)	"Conv. Value" falls within the specified range as checked through gradation adjust. Dark: 0 ± 100 Highlight: 0 ± 60	YES	Go to step 9.
7	Image Process Adjustment → D Max Density (Service Mode)	The problem has been eliminated through the adjust of D Max Density.	NO	Go to next step.
8	Image Process Adjustment → Stabilizer → Reset + Stabilizer (Service Mode)	After the Initialize + Image Stabilization sequence has been completed, run gradation adjust.	NO	Go to next step.
9		The problem has been eliminated through the checks of steps up to 8.	NO	Change image transfer belt unit. → Change printer control board → Change high voltage unit/2.

22.3.32 Printer 4-color: poor color reproduction

A. Typical faulty images

A02EF4C527DA

B. Troubleshooting procedure

Step	Section	Check item	Result	Action
1	Paper	Paper is damp.	YES	Change paper to one just unwrapped from its package.
2	Transfer belt unit	Terminal is dirty.	YES	Clean.
3	Transfer roller unit	Transfer roller is installed properly.	NO	Reinstall.
4		Charge neutralizing needle is not separated and ground terminal is connected properly.	NO	Correct or change.
5	IDC sensor	Sensor is dirty.	YES	Clean IDC sensor and execute the image stabilization.
6	Image Process Adjustment → Gradation Adjust (Service Mode)	"Conv. Value" falls within the specified range as checked through gradation adjust. Dark: 0 ± 100 Highlight: 0 ± 60	YES	Go to step 9.
7	Image Process Adjustment →D Max Density (Service Mode)	The problem has been eliminated through the adjust of D Max Density.	NO	Go to next step.
8	Image Process Adjustment → Stabilizer → Reset + Stabilizer (Service Mode)	After the Reset + Stabilizer sequence has been completed, run gradation adjust.	NO	Go to next step.
9		The problem has been eliminated through the checks of steps up to 8.	NO	Change transfer belt unit. → Change printer control board → Change high voltage unit/2.

22.3.33 Printer 4-color: incorrect color image registration

A. Typical faulty images

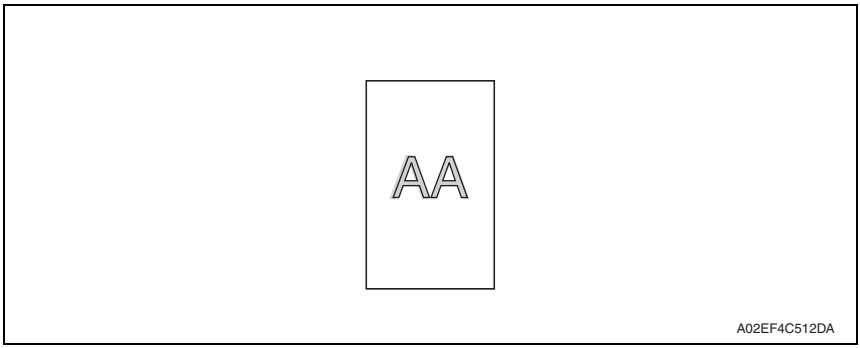

B. Troubleshooting procedure

Step	Section	Check item	Result	Action
1	Warning display	The maintenance call mark is displayed on the panel.	YES	Take action according to the warning code shown on the state confirm screen.
2	Machine condition	Vibration is given to the machine after main power switch has been turned ON.	YES	Turn off the main power switch and turn it on again more than 10 seconds after.
3	Transfer belt unit	Fingerprints, oil, or other foreign matter is evident on the transfer belt.	YES	Clean with specified solvent. (See Maintenance.)
4		Transfer belt is dirty or scratched.	YES	Clean dirty belt with a soft cloth. Change transfer belt unit if belt is damaged.
5		Drive coupling to the machine is dirty.	YES	Clean.
6	Imaging unit	The surface of the PC drum is scratched.	YES	Change imaging unit.
7	Transfer roller unit	Transfer roller is installed properly.	NO	Reinstall.
8		Transfer roller is dirty or scratched.	YES	Change transfer roller unit.
9	Machine → Fusing Transport Speed (Service Mode)	Brush effect or blurred image occurs.	YES	Readjust fusing transport speed.
10	Machine → Color registration Adjustment (Service Mode)	Check the specific color in which color shift occurs.	YES	Perform “Color registration Adjustment.” If color shift is not corrected even with a correction of ± 1 dot, go to next step.
⚠1 11	PH relay board	REYB/PH ICP3, ICP4 or ICP5 conduction check	NO	Change PH relay board.
⚠1 12	Printer control board	PRCB ICP17 conduction check	NO	Change printer control board.
13		The problem has been eliminated through the checks of steps up to 10.	NO	Change transfer belt unit.

22.3.34 Printer 4-color: void areas, white spots

A. Typical faulty images

Void areas

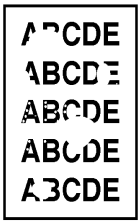

White spots

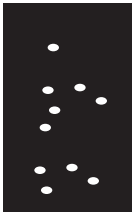

A02EF4C523DA

B. Troubleshooting procedure

Step	Section	Check item	Result	Action
1	Image check	There are void areas at the front side or high density section.	YES	See P.896
2		There are void areas in the trailing edge.	YES	Perform [Transfer Adjust] of [Image Process Adjustment] under Service Mode.
3	Transfer belt unit	Fingerprints, oil, or other foreign matter is evident on the transfer belt.	YES	Clean with specified solvent. (See Maintenance.)
4		Transfer belt is dirty or scratched.	YES	Clean dirty belt with a soft cloth. Change transfer belt unit if belt is damaged.
5	Transfer roller unit	Transfer roller is dirty or scratched.	YES	Change 2nd image transfer roller unit.
6		Charge neutralizing needle is not separated and ground terminal is connected properly.	NO	Correct or change.
7	Paper path	There is foreign matter on paper path.	YES	Remove foreign matter.
8		Pre-image transfer guide plate is damaged or dirty.	YES	Clean or change.
9		The problem has been eliminated through the checks of steps up to 8.	NO	Change transfer belt unit.

22.3.35 Printer 4-color: colored spots

A. Typical faulty images

A02EF4C509DA

B. Troubleshooting procedure

Step	Section	Check item	Result	Action
1	Imaging unit	The surface of the PC drum is scratched.	YES	Change imaging unit.
2	Transfer belt unit	Fingerprints, oil, or other foreign matter is evident on the image transfer belt.	YES	Clean with specified solvent. (See Maintenance.)
3		Transfer belt is dirty or scratched.	YES	Clean dirty belt with a soft cloth. Change transfer belt unit if belt is damaged.
4	Transfer roller unit	Transfer roller is dirty or scratched.	YES	Change transfer roller unit.
5	Paper path	There is foreign matter on paper path.	YES	Remove foreign matter.
6	Fusing unit	Fusing belt is dirty or scratched.	YES	Change fusing unit.
7		The problem has been eliminated through the checks of steps up to 6.	NO	Change transfer belt unit.

22.3.36 Printer 4-color: poor fusing performance, offset

A. Typical faulty images

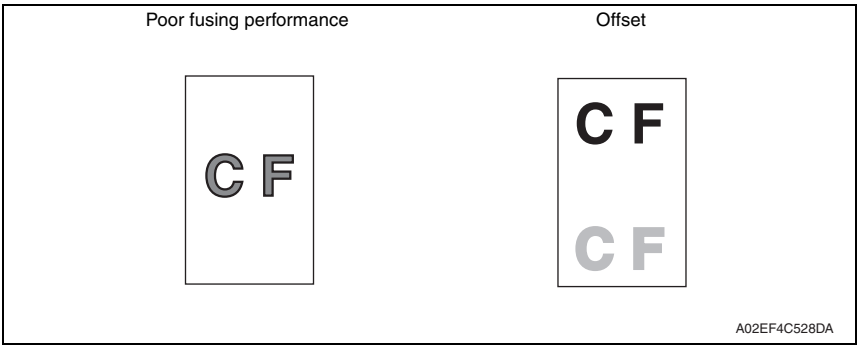

B. Troubleshooting procedure

Step	Section	Check item	Result	Action
1	Paper	Paper type does not match.	YES	Change the setting.
2	Machine→ Fusing Temperature (Service Mode)	Changing fusing temperature eliminates the problem of poor fusing performance and offset.	YES	Readjust fusing temperature.
3		The problem has been eliminated through the checks of steps up to 2.	NO	Change fusing unit.

22.3.37 Printer 4-color: brush effect, blurred image

A. Typical faulty images

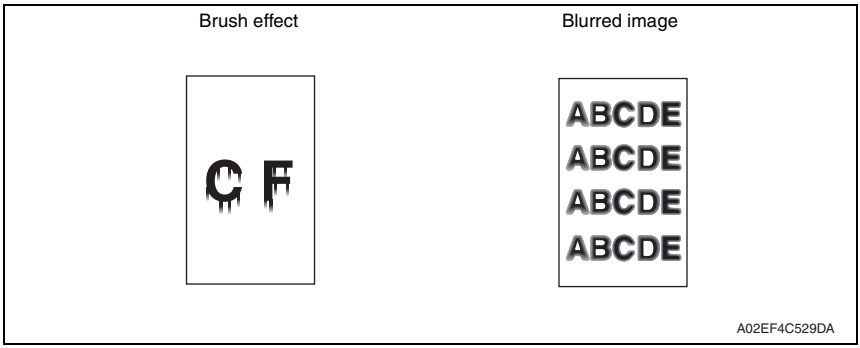

B. Troubleshooting procedure

Step	Section	Check item	Result	Action
1	Paper	Paper is damp.	YES	Change paper to one just unwrapped from its package.
2		Paper type does not match.	YES	Change the setting.
3	Fusing unit	Fusing unit is installed properly.	NO	Reinstall.
4		Fusing entrance guide plate is dirty.	YES	Clean.
5		Fusing belt is dirty or scratched.	YES	Change fusing unit.
6	Machine → Fusing Transport Speed (Service Mode)	Changing fusing speed eliminates the problem of brush effect and blurred image.	YES	Readjust fusing transport speed.

22.3.38 Printer 4-color: back marking

A. Typical faulty images

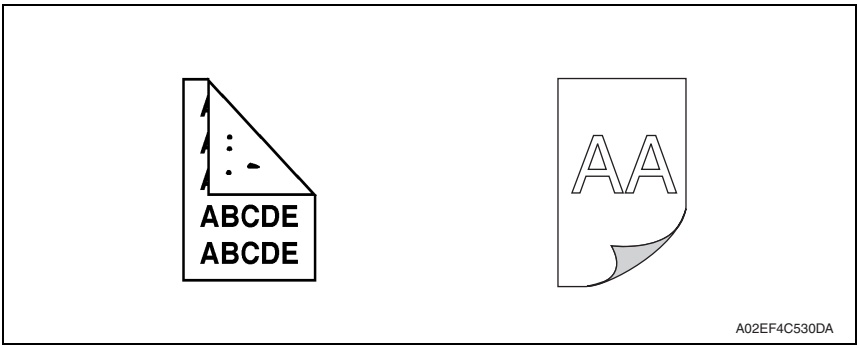

B. Troubleshooting procedure

Step	Section	Check item	Result	Action
1	2nd image transfer roller unit	Image transfer roller is scratched or dirty.	YES	Change transfer roller unit.
2	Paper path	There is foreign matter on paper path.	YES	Remove foreign matter.
3	Fusing unit	Fusing entrance guide plate is scratched or dirty.	YES	Clean or change.
4		Lower fusing roller is scratched or dirty.	YES	Change fusing unit.
5	Transfer belt unit	Fingerprints, oil, or other foreign matter is evident on the transfer belt.	YES	Clean with specified solvent. (See Maintenance.)
6		The problem has been eliminated through the checks of steps up to 5.	NO	Change transfer belt unit. → Change high voltage unit/2.

22.3.39 Printer 4-color: uneven image

A. Typical faulty images

A02EF4C525DA

B. Troubleshooting procedure

Step	Section	Check item	Result	Action
1	Toner cartridge	The toner cartridge of every color is surely installed.	NO	Re-install it.
2	PH unit	The PH unit is surely installed.	NO	Re-install it.
3	Toner cartridge	There is any stain or breakage on the drive section of the toner cartridge.	YES	Clean/replace the toner cartridge.
4	Imaging unit	There is any stain, damage or abrasion on the PC drum.	YES	Replace the imaging unit.
5	Transfer roller unit	There is any stain, damage, deformation or abrasion on the transfer roller.	YES	Replace the transfer roller unit.
6	Fusing unit	There is any stain, damage, deformation or abrasion on the roller and drive section of the fusing unit.	YES	Replace the fusing unit.
7		The problem has been eliminated through the check of step 6.	NO	Replace the transfer belt unit.

23. IC protector

23.1 Outline

- To increase product safety, this MFP has an IC protector (ICP) installed in each board. ICP is a component that protects IC. If the amount of the current supplied to the electrical parts such as motor exceeds the set level, ICP trips to protect IC from over current. The following list contains ICP installed in each board, related devices, and symptoms that occur when ICP trips.

23.2 IC protector list

23.2.1 Main body

A. Printer control board

ICP No.	Symbol	Target part name	When ICP trips	
			Symptom in each load	Trouble code and others
ICP1	M9	Toner supply motor/Y	Abnormally low toner density caused by toner supply motor/Y and its adjustment failure	C-2555/ C-255B/C-2563
	M10	Toner supply motor/M	Abnormally low toner density caused by toner supply motor/M and its adjustment failure	C-2553/ C-255A/C-2562
ICP2	M11	Toner supply motor/C	Abnormally low toner density caused by toner supply motor/C and its adjustment failure	C-2551/ C-2559/C-2561
	M12	Toner supply motor/K	Abnormally low toner density caused by toner supply motor/K and its adjustment failure	C-2557/ C-255C/C-2564
ICP3	M20	Waste toner agitating motor	Waste toner agitating motor's failure to turn	C-2204
ICP4	M21	1st transfer pressure retraction motor	Transfer belt pressure/retraction failure	C-2152
ICP5	M13	Toner cartridge motor Y/M	Toner empty detection (TC replacement message)	—
	M14	Toner cartridge motor C/K	Toner empty detection (TC replacement message)	—
ICP6	FM3	Cooling fan motor	Cooling fan motor's failure to turn	C-5356
	FM7	Toner suction fan motor	Toner suction fan motor's failure to turn	C-2350
	FM13	Paper cooling fan motor	Paper cooling fan motor's failure to turn	C-0351
ICP7	FM16	Rear side cooling fan motor	Rear side cooling fan motor's failure to turn	C-2354
	SD1	Gate switch solenoid	Paper exit section jam	—
ICP8	FM101	Tucking fan motor/1	Occurrence of tucking problem	—
	FM102	Tucking fan motor/2	Occurrence of tucking problem	—
	FM103	Tucking fan motor/3	Occurrence of tucking problem	—

ICP No.	Symbol	Target part name	When ICP trips	
			Symptom in each load	Trouble code and others
ICP9	FM2	Fusing cooling fan motor/1	Fusing cooling fan motor/1's failure to turn	C-3303
	FM6	Ozone ventilation fan motor	Ozone ventilation fan motor's failure to turn	C-5354
ICP10	FM10	IH cooling fan motor/1	IH cooling fan motor/1's failure to turn	C-5304
	FM12	IH cooling fan motor/2	IH cooling fan motor/2's failure to turn	C-5306
ICP11	EL/Y	Main erase lamp/Y	No change (Unlit. Image persistence and stain on copy may occur.)	—
	EL/M	Main erase lamp/M		—
	EL/C	Main erase lamp/C		—
	EL/K	Main erase lamp/K		—
ICP12	—	Key counter	Unable to count	—
	TCT	Total counter	Unable to make a copy (LED of Start Key blinks in red.)	—
ICP13	M16	Color PC drum motor	Color PC drum motor's failure to turn	C-2253
	M17	Color developing motor	Color developing motor's failure to turn	C-2255
ICP14	M18	K PC drum motor	K PC drum motor's failure to turn	C-225B
	M19	K developing motor	K developing motor's failure to turn	C-2259
ICP15	M1	Transfer belt motor	Transfer belt motor's failure to turn	C-5104
	REDB	Relay drive board	No change (Dehumidifier heater remains ON, causing no negative effects.)	—
ICP16	M30	Fusing motor	Fusing motor's failure to turn	C-3201
ICP17	TCRS/Y	TCR sensor/Y	Abnormally high toner density detected by TCR sensor/Y and its adjustment failure	C-2556/C-255B
	TCRS/M	TCR sensor/M	Abnormally high toner density detected by TCR sensor/M and its adjustment failure	C-2554/C-255A
	TCRS/C	TCR sensor/C	Abnormally high toner density detected by TCR sensor/C and its adjustment failure	C-2552/C-2559
	TCRS/K	TCR sensor/K	Abnormally high toner density detected by TCR sensor/K and its adjustment failure	C-2558/C-255C
	REYB/PH	PH relay board	P-14 color shift may occur.	P-14
	INDEX B	Index board	Laser failure	C-4501
	PZS_K	Toner empty sensor/K	K toner empty detection (TC replacement message)	—

ICP No.	Symbol	Target part name	When ICP trips	
			Symptom in each load	Trouble code and others
ICP17	IDCS/F	IDC registration sensor/F	IDC registration sensor/F malfunction	P-5
	IDCS/R	IDC registration sensor/R	IDC registration sensor/R malfunction	P-28
	TEMS1	Heating roller temperature sensor/1	Fusing heater failure/abnormally low fusing temperature/ fusing sensor wire disconnection /stain on fusing sensor	C-3425/ C-3825/ C-3925/C-392A
	TEMS2	Heating roller temperature sensor/2	Fusing sensor wire disconnection	C-3921
	TEMS3	Heating roller temperature sensor/3	Abnormally low fusing temperature/fusing sensor wire disconnection	C-3822/C-3922
ICP18	M38	Cleaner motor	Cleaner motor's failure to turn	C-2257

B. MFP board

ICP No.	Symbol	Target part name	When ICP trips	
			Symptom in each load	Trouble code and others
F201	—	—	Control panel unlit (As polyswitch is used, the problem disappears by turning OFF the main power switch and leaving MFP alone.	—
F250	—	—	MFP does not boot up. (As polyswitch is used, the problem disappears by turning OFF the main power switch and leaving MFP alone.)	—
F300	—	—	USB device does not work. (As polyswitch is used, the problem disappears by turning OFF the main power switch and leaving MFP alone.)	—
F301	—	—	Unable to download (As polyswitch is used, the problem disappears by turning OFF the main power switch and leaving MFP alone.)	—
ICP 200	—	—	Management device does not communicate.	—
Q206	—	—	Unable to download (Download screen does not appear.)	—

C. Paper feed/transport drive board

ICP No.	Symbol	Target part name	When ICP trips	
			Symptom in each load	Trouble code and others
ICP1	LUDB	LU drive board	LCT feed section/transport section jam	—
	PS3	Paper feed sensor	LCT feed section/transport section jam	—
	PS28	Intermediate roller sensor	Tray 3/4 intermediate transport roller section jam	—
	PS4	Tray1 vertical transport sensor	Tray 1 feed section jam	—
	PS5	Tray1 paper feed sensor	Tray 1 feed section jam	—
	PS12	Tray2 vertical transport sensor	Tray 2 feed section jam	—
	PS13	Tray2 paper feed sensor	Tray 2 feed section jam	—
ICP2	FM1	Suction fan motor	Suction fan motor's failure to turn	C-0301
	FM4	Fusing cooling fan motor/2	Fusing cooling fan motor/2's failure to turn	C-3304
	FM5	Fusing cooling fan motor/3	Fusing cooling fan motor/3's failure to turn	C-3305
ICP3	CL1	Tray 1 paper feed clutch	Tray 1 feed section jam	—
	CL2	Tray2 paper feed clutch	Tray 2 feed section jam	—
ICP4	CL5	Tray3 paper feed clutch	Tray 3 feed section jam	—
	CL6	Tray3 transport clutch	Tray 3/4 horizontal transport section jam	—
	CL7	Tray4 paper feed clutch	Tray 3 feed section jam	—
ICP5	CL3	Horizontal Transport clutch	Tray 3/4 horizontal transport section jam	—
ICP6	M25	Transport motor	Tray 3/4 feeder transport motor failure to turn detection	C-0104

D. PH relay board

ICP No.	Symbol	Target part name	When ICP trips	
			Symptom in each load	Trouble code and others
ICP1	FM14	PH cooling fan motor	PH cooling fan motor's failure to turn	C-4301
	FM15	IU cooling fan motor	IU cooling fan motor's failure to turn	C-2353
ICP2	M34	Polygon motor	Polygon motor's turning at abnormal timing	C-4101
ICP3	M37	Skew correction motor/C	P-14 color shift may occur.	P-14
ICP4	M36	Skew correction motor/M	P-14 color shift may occur.	P-14
ICP5	M35	Skew correction motor/Y	P-14 color shift may occur.	P-14

ICP No.	Symbol	Target part name	When ICP trips	
			Symptom in each load	Trouble code and others
ICP6	LDDB/Y	Laser drive board/Y	Laser failure	C-4501
	LDDB/M	Laser drive board/M	Laser failure	C-4501
	LDDB/C	Laser drive board/C	Laser failure	C-4501
	LDDB/K	Laser drive board/K	Laser failure	C-4501

E. High voltage unit/1

ICP No.	Symbol	Target part name	When ICP trips	
			Symptom in each load	Trouble code and others
IP101	—	Charge corona/grid/developing section_Y	Abnormal image (Stabilization is not completed successfully.)	P-6/7/8/9
IP201	—	Charge corona/grid/developing section_M	Abnormal image (Stabilization is not completed successfully.)	P-6/7/8/9
IP301	—	Charge corona/grid/developing section_C	Abnormal image (Stabilization is not completed successfully.)	P-7/8
IP401	—	Charge corona/grid/developing section_K	Abnormal image (Stabilization is not completed successfully.)	P-6/9

F. High voltage unit/2

ICP No.	Symbol	Target part name	When ICP trips	
			Symptom in each load	Trouble code and others
IP101	—	Image transfer	Abnormal image (transfer failure, ATVC malfunction)	P-27

G. DC power supply

ICP No.	Symbol	Target part name	When ICP trips	
			Symptom in each load	Trouble code and others
F551	FM9	Power supply cooling fan motor	Power supply cooling fan motor's failure to turn	C-5351

H. Scanner relay board

ICP No.	Symbol	Target part name	When ICP trips	
			Symptom in each load	Trouble code and others
PTR1	PS14	Empty sensor	JAM caused by the last original fed from DF	—
	RS201	Original cover sensor	Unable to detect a close of DF	—
	REYB/ SCAN	Scanner relay board_WAKE signal generation section	Opening and closing DF or placing original on DF cannot cause MFP to wake from sleep mode.	—
	MCMB	Machine condition monitor board	Unlit InfoLine (blue and orange) located at the front of scanner section	—
	—	Local interface board (option)	USB device does not work.	—
PTR2	PS204	Original size detection sensor/ 1	Wrong original size detection	—
	PS205	Original size detection sensor/ 2	Wrong original size detection	—
F1	FM201	Optical cooling fan motor	Optical cooling fan motor's failure to turn	C-8302

⚠1 23.2.2 DF-618

A. DF control board

ICP Symbol	Symbol	Relevant parts	When ICP trips	
			Symptom in each load	Trouble code and others
F8	—	DC to DC converter input section 24V line	Unable to produce DC5V in ADF and MFP unable to detect ADF	—
F6	SD1	Switch back solenoid	ADF paper exit / image reading section JAM	—
	SD2	Exit switch back solenoid	ADF image reading section JAM	—
F7	SD3	Stamp solenoid	Unable to place a stamp	—
	FM1	Cooling fan	Cooling fan failure	C-8302
F10	PS3	Registration sensor	ADF transport section JAM	—
	PS8	Reverse Registration sensor	ADF turnover section JAM	—
	PS4	After separate sensor	ADF transport section JAM	—
F9	PS7	Reverse roller sensor	Turn around pressure welding alienation trouble	C-8102
	PS9	Before read sensor	ADF transport section JAM	—
	PS10	Length sensor/1	Wrong original size detection	—
	PS11	Length sensor/2	Wrong original size detection	—
	PS12	Length sensor/3	Wrong original size detection	—
	PS15	Lift up lower sensor	Lift up mechanism failure	C-8106
F11	PS20	Original set sensor	Original reset indication	—
F2	M7	Registration motor	ADF transport section JAM	—
F3	M1	Reading motor	ADF image reading section JAM	—

ICP Symbol	Symbol	Relevant parts	When ICP trips	
			Symptom in each load	Trouble code and others
F1	M3	Exit motor	ADF paper exit section	—
F4	M2	Take-up motor	ADF paper feed section JAM	—
PS1	M6	Lift-up motor	Lift up mechanism failure	C-8106
PS2	M5	Switchback roller pressure/ retraction motor	Turn around pressure welding alienation trouble	C-8102
PS3	M4	Reading roller pressure/retraction motor	Before reading pressure welding alienation mechanism	C-8101

1 23.2.3 LU-301/LU-204

A. LU drive board

ICP Symbol	Symbol	Relevant parts	When ICP trips	
			Symptom in each load	Trouble code and others
ICP2	M1	Lift-up motor	LCT up/down abnormality	C-0216
ICP3	M3	Transport motor	LCT transport section JAM	—
ICP4	M2	Paper feed motor	LCT feed section JAM	—
ICP5	PS3	Paper feed sensor	LCT feed section JAM	—

1 23.2.4 JS-504

A. JS control board

ICP Symbol	Symbol	Relevant parts	When ICP trips	
			Symptom in each load	Trouble code and others
F1	—	FN main power switch	Unable to supply 24V to FN and MFP unable to detect FN	C-1004
F2	—	DC to DC converter input section 24 V line	Unable to produce DC5V in FN and MFP unable to detect FN	C-1004
F3	Unused			
F4	T1FD TB/ PR	Lower tray paper full detect board/PR	Continuous tray 1 full detection	—
	T2FD TB/ PR	Upper tray paper full detect board/PR	Continuous tray 2 full detection	
F6	M2	Shift motor	Shift motor drive failure	C-1182
F7	M1	Transport motor	Transport section JAM	—

⚠1 23.2.5 ZU-606

A. ZU control board

ICP Symbol	Symbol	Relevant parts	When ICP trips	
			Symptom in each load	Trouble code and others
ICP1	—	DC5V sensor and others in the board	Unable to be detected	—
ICP3	M601	Registration motor	Entrance JAM	—
ICP4	M606	Main motor	Folding section JAM	—
ICP5	M605	Punch shift motor	Punch shift motor drive malfunction	C-1133
ICP6	M603	2nd stopper motor	2nd stopper motor drive malfunction	C-1131
ICP7	M602	1st stopper motor	1st stopper motor drive malfunction	C-1130
ICP8	SD601	Gate solenoid/Lw	Main motor cooling fan drive malfunction	C-1134
	SD602	Gate solenoid/Up		
	CL601	Punch clutch		
	FM601	Main motor cooling fan		
ICP9	M608	Punch switchover motor	Punch switchover motor drive malfunction	C-1136
ICP10	M604	Punch motor	Punch motor drive malfunction	C-1135
ICP12	M607	Punch scraps conveyance motor	Punch scraps full	—

⚠1 23.2.6 FS-526

A. FS control board

ICP Symbol	Symbol	Relevant parts	When ICP trips	
			Symptom in each load	Trouble code and others
ICP1	M5	Main tray lift motor	Main tray Up/Down motor malfunction	C-1102
ICP2	M4	Exit roller motor	Paper exit roller drive motor malfunction	C-1104
	SD1	Route change gate solenoid	SD staple section JAM	—
	SD2	Bypass gate solenoid	Bypass transport JAM	—
	SD3	Sub tray gate solenoid	Sub tray exit JAM	—
	SD4	Switch back solenoid	JAM during saddle stitch with paper fed from PI	—
	SD404	3rd Entrance switching solenoid	Job tray paper exit JAM	—
ICP3	M1	Transport motor/1	Entrance JAM	—
	M2	Transport motor/2	Entrance JAM	—

ICP Symbol	Symbol	Relevant parts	When ICP trips	
			Symptom in each load	Trouble code and others
ICP4	M11	Alignment plate motor/F	Side-staple front adjust drive motor malfunction	C-1103
	M12	Alignment plate motor/R	Side-staple rear adjust drive motor malfunction	C-1140
	M15	Trail edge paddle motor	Trail edge paddle up/down drive malfunction	—
	M18	Rewind paddle motor	Rewind paddle motor drive malfunction	—
	M19	2 staples trail edge stopper motor	End stopper drive motor malfunction	C-1145
ICP5	M3	Bypass transport motor	Bypass transport motor drive malfunction	—
	M13	2 staples stapler movement motor	Side-staple stapler drive malfunction	C-1106
ICP6	M6	Paper output roller motor	Paper exit auxiliary roller motor malfunction	C-1105
	M10	Stacker entrance motor	Stacker entrance motor drive malfunction	—
ICP7	—	DC5V sensor and others in the board	Unable to be detected	—
ICP8	—	DC3.3V sensor and others in the board	Unable to be detected	—
ICP9	M17	Stacker plate motor	Spare stacker board drive motor malfunction	C-1144
ICP10	M14	2 staples stapler motor	Side-staple stapler motor drive malfunction	C-1109
ICP11	—	24V in interlock board	Side-staple stapler motor drive malfunction	C-1109
ICP12	M34	Exit motor (SD-508)	Center-staple paper exit motor malfunction	C-1152
ICP13	M16	Paddle motor	Side-staple paddle roller motor malfunction	C-1141

B. Interlock board

ICP Symbol	Symbol	Relevant parts	When ICP trips	
			Symptom in each load	Trouble code and others
ICP1	—	DC5V sensor and others in the board	Side-staple stapler motor drive malfunction	C-1109

C. Transport control board

ICP Symbol	Symbol	Relevant parts	When ICP trips	
			Symptom in each load	Trouble code and others
ICP1	M201	Transport motor	Transport section JAM	—
ICP2	FM1 FM2	Fan motor/1 Fan motor/2	Fan motor drive malfunction	—
ICP3	—	DC5V sensor and others in the board	Unable to be detected	—

23.2.7 SD-508

A. SD drive board

ICP Symbol	Symbol	Relevant parts	When ICP trips	
			Symptom in each load	Trouble code and others
ICP2	M22	Leading edge stopper motor	Center-staple lead edge stopper motor malfunction	C-1113
ICP3	—	DC5V sensor and others in the board	Unable to be detected	—
ICP4	M20	Center staple alignment motor / F	Center-staple front adjust drive motor malfunction	C-1114
	M21	Center staple alignment motor / R	Center-staple rear adjust drive motor malfunction	C-1150
	M23	Center staple motor	Center-staple stapler drive motor malfunction	C-1151
	M26	Center staple paddle lift motor/C	Center-staple paddle up-down motor malfunction	C-1153
ICP5	M29	Center staple paddle/T	Center-staple paddle roller motor malfunction (trailing edge)	C-1156
	M30	Center staple paddle/C	Center-staple paddle roller motor malfunction (middle)	C-1157
	M33	Transport motor	Exit motor drive malfunction	C-1116
	SD5	Tri-folding change solenoid	SD paper exit JAM	—
	SD6	Exit grip solenoid		—
ICP6	M25	Clincher motor	Center-staple clinch roller motor malfunction	C-1112
ICP7	M24	Staple motor	Center-staple head roller motor malfunction	C-1110
ICP8	M32	Center fold knife motor	Center-staple knife drive motor malfunction	C-1115

23.2.8 PK-516

A. Punch control board

ICP Symbol	Symbol	Relevant parts	When ICP trips	
			Symptom in each load	Trouble code and others
ICP1	M302	Punch oscillating motor	Output OP punch driving motor malfunction	C-1132
ICP2	—	DC5V sensor and others in the board	Unable to be detected	—
ICP4	M301	Punch drive motor	Punch shift motor drive malfunction	C-1127

23.2.9 PI-505

A. PI drive board

ICP Symbol	Symbol	Relevant parts	When ICP trips	
			Symptom in each load	Trouble code and others
ICP1	CL201	Transfer clutch /Up	Paper feed JAM	—
	CL202	Transfer clutch /Lw		—
	CL203	Registration clutch		—
	SD201	Pick-up solenoid /Up		—
	SD202	Pick-up solenoid /Lw		—
ICP2	M201	Tray lift motor /Up	Sheet feeder up/down drive failure (upper)	C-1125
	M202	Tray lift motor /Lw	Sheet feeder up/down drive failure (lower)	C-1124
ICP3	—	DC5V sensor and others in the board	Unable to be detected	—
ICP4	M203	Transfer motor	Paper feed JAM	—

23.2.10 FS-527

A. FS control board

ICP Symbol	Symbol	Relevant parts	When ICP trips	
			Symptom in each load	Trouble code and others
F1	—	Between connection with MFP and 24V power line	No operation (Due to no power supply to CPU, FS connection not detected)	—
F3	—	24V to 5V DC to DC converter		—
F4	—	5V to 3.3V DC to DC converter		—
F5	M1	Paper passage motor/1	JAM between MFP and the paper receiving section	—
F6	M3	Paper passage motor/2	JAM between RU and the intermediate section	—
F7	M4	Conveyance motor	JAM between the intermediate and lower path sections	—

ICP Symbol	Symbol	Relevant parts	When ICP trips	
			Symptom in each load	Trouble code and others
F8	M5	Exit motor	JAM or multiple sheets/sets ejection JAM between the accommodation and exit sections.	—
F9	M11	Stapler movement motor	Stapler movement drive failure	C-11B0
F10	M13	Alignment plate motor	Alignment plate motor drive malfunction	C-1190
F11	M14	Leading edge stopper motor	Leading edge stopper motor drive malfunction	C-1194
F12	SD1	Accommodation paddle solenoid	Accommodation section JAM	—
F13	M16	Tray2 shift motor	Shift motor drive failure	C-1182
F14	M2	Duplex path switching motor	Duplex path switching motor drive malfunction (Paper may be fed in the mode where this motor does not operate)	C-11E0
F15	M6	Upper lower path switching motor	Upper lower path switching motor drive malfunction (Paper may be fed when no finishing options are selected.)	C-11E1
F16	M8	Tray1 path switching motor	Tray1 path switching motor drive malfunction (Paper may be fed when it is not ejected to the tray 1.)	C-11E2
F17	M17	Tray3 exit roller retraction motor	Tray 3 exit roller pressure/ retraction failure (Only when JS is installed)	C-11A7
F18	M9	Exit roller retraction motor	Tray 2 exit roller pressure/ retraction failure	C-11A1
F19	M10	Accommodation roller retraction motor	Accommodation roller pressure/ retraction failure	C-11A2
F20	M100	Punch motor/1	Punch motor drive malfunction (Only during the initial operation or the punch operation in punch mode)	C-11C0
F21	M18	Stapler motor	Staple drive failure (Paper may be fed when stapling is not selected)	C-11B2
F22	M15	Elevate motor	Elevate drive malfunction	C-1183
F23	M12	Accommodation paddle motor	Accommodation section JAM (Depending on conditions, paper may be ejected when no finishing options are selected.)	—
F25	M15	Elevate motor	Elevate drive malfunction	C-1183
F26	PS200	Punch cam position sensor	Punch motor drive malfunction	C-11C0
	PS300	Punch pulse sensor/1		
	PS100	Punch home sensor/1		
F27	—	Stapler home sensor	Staple drive failure (Likely to staple repeatedly depending on conditions)	C-11B2
	—	Stapler self-priming sensor		
	—	Staple empty sensor		

ICP Symbol	Symbol	Relevant parts	When ICP trips	
			Symptom in each load	Trouble code and others
F29	PS1	Paper passage sensor/1	JAM	—
	PS2	Paper passage sensor/2		
	PS10	Registration sensor		
	PS30	Punch hole full sensor		
F30	PS9	Lower path sensor	JAM	—
	PS16	Tray2 paper detection sensor		

1 23.2.11 SD-509

A. SD drive board

ICP Symbol	Symbol	Relevant parts	When ICP trips	
			Symptom in each load	Trouble code and others
F1	PS43	Paper detection sensor/1	Saddle section JAM	—
	PS44	Paper detection sensor/2		
F2	—	24V to 5V DC to DC converter	No operation (Due to no power supply to CPU, SD connection is not detected)	—
F3	M24	Center staple alignment motor/F	Center-staple front adjust drive motor malfunction	C-1114
F4	M23	Center staple alignment motor/R	Center-staple rear adjust drive motor malfunction	C-1150
F5	M20	Leading edge stopper motor	Center-staple lead edge stopper motor malfunction	C-1113
F7	M26	Center fold plate motor	Center-staple knife drive motor malfunction	C-1115
F8	—	Saddle stapler	Saddle stapler drive failure	C-11B5
F9	SD3	Leading edge grip solenoid	Misalignment, misalignment of sheets in a copy set, and misaligned saddle stitch and fold positions	—
F10	—	Stapler home sensor	Center-stapler drive failure or staple empty indication	C-11B5
	—	Staple empty sensor 1		
	—	Staple empty sensor 2		
F11	M25	Center fold roller motor	Center-staple transfer motor malfunction	C-1116
F12	M25	Center fold roller motor	Center-staple transfer motor malfunction	C-1116
F13	M21	Upper paddle motor	Center-staple paddle roller motor malfunction (trailing edge)	C-1156
F14	M22	Lower paddle motor	Center-staple paddle roller motor malfunction (Leading edge)	C-1158

APPENDIX

24. PARTS LAYOUT DRAWING

24.1 Main body

24.1.1 Scanner section

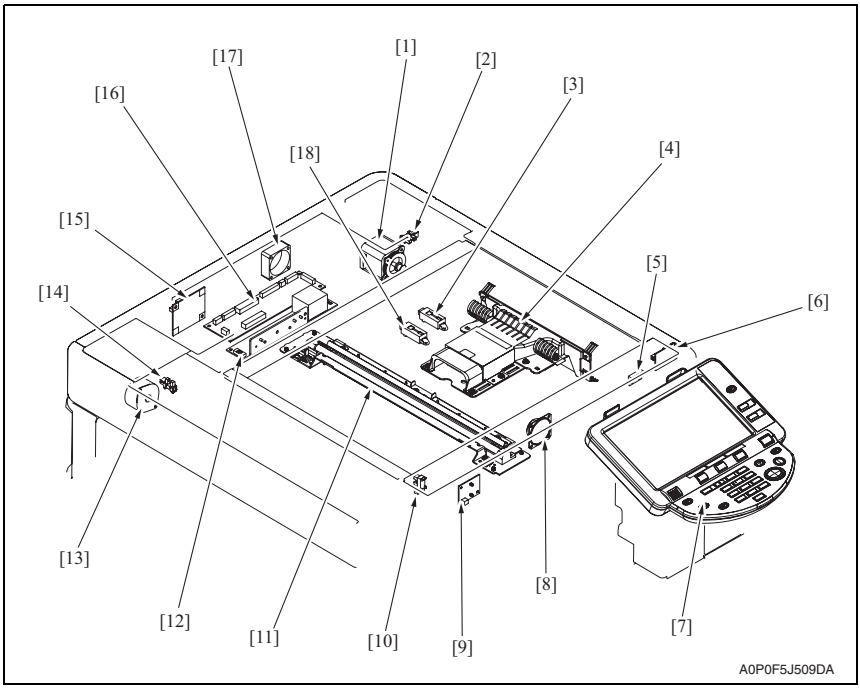

[1] Scanner motor (M201)
[2] 15 degree sensor (PS202)
[3] Original size detection sensor/1 (PS204)
[4] CCD board (CCDB)
[5] Original cover sensor (RS201)
[6] USB board (UB)
[7] Control panel assy
[8] Fax speaker (SP)
[9] Machine condition monitor board (MCMB)
[10] Scanner home sensor (PS201)
[11] Exposure lamp (FL201)
[12] Inverter board (INVB)
[13] Original glass moving motor (M202)
[14] Glass home sensor (PS203)
[15] Original glass position control board (OGPCB)
[16] Scanner relay board (REYB/SCAN)
[17] Optical cooling fan motor (FM201)
[18] Original size detection sensor/2 (PS205)

24.1.2 Front side

A. Load

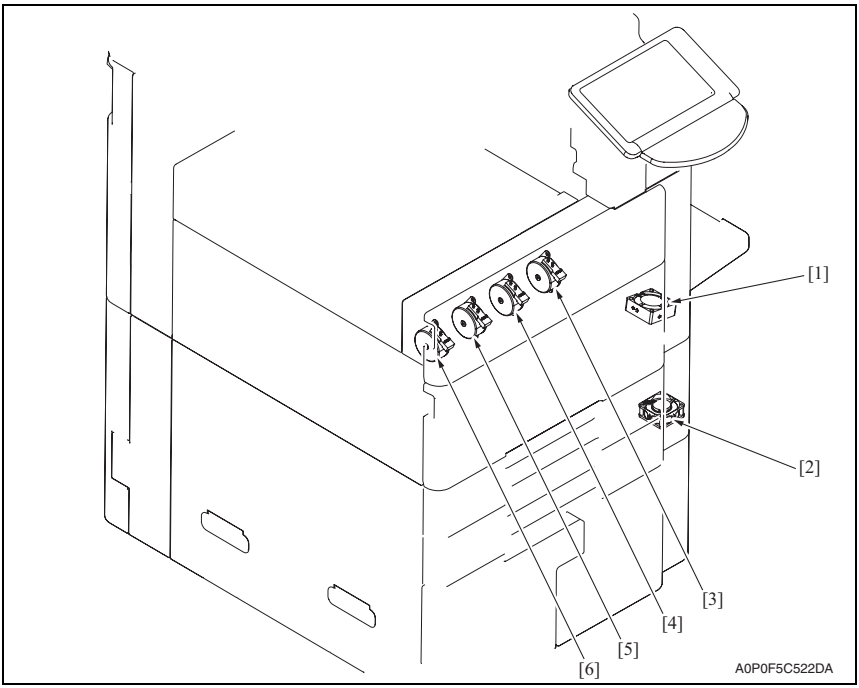

[1] IH cooling fan motor/2 (FM12)
[2] IH cooling fan motor/1 (FM10)
[3] Toner supply motor/K (M12)
[4] Toner supply motor/M (M11)
[5] Toner supply motor/C (M10)
[6] Toner supply motor/Y (M9)

B. Board/switch/sensor/others

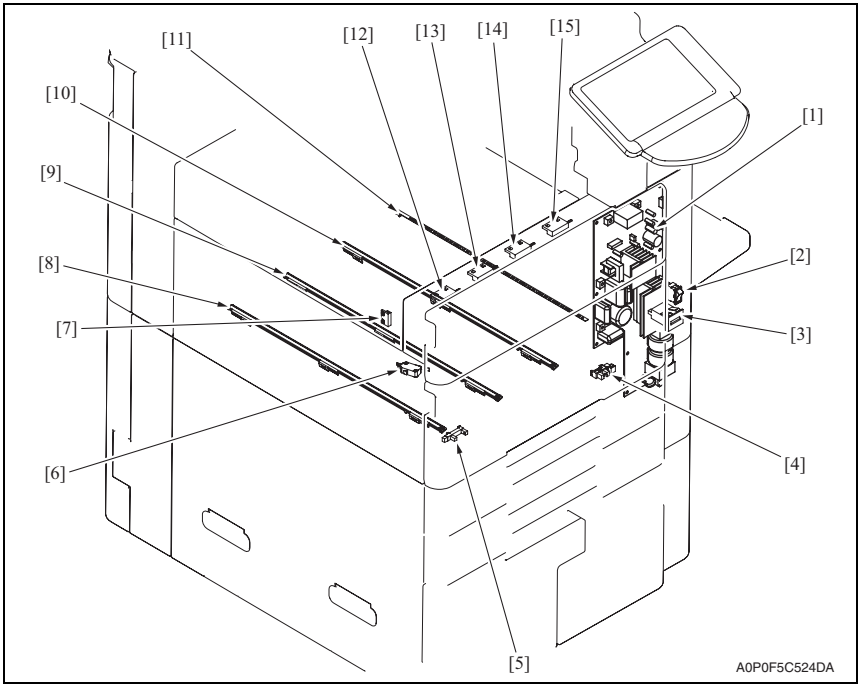

[1] IH power supply (IHPU)
[2] Power switch (SW1)
[3] Total counter (TCT)
[4] Waste toner box set sensor (PS53)
[5] Waste toner full sensor (PS54)
[6] Front door switch (MS3)
[7] Toner cartridge cover switch (RS1)
[8] Main erase lamp/Y (EL/Y)
[9] Main erase lamp/M (EL/M)
[10] Main erase lamp/C (EL/C)
[11] Main erase lamp/K (EL/K)
[12] Toner empty sensor/Y (RS/Y)
[13] Toner empty sensor/M (RS/M)
[14] Toner empty sensor/C (RS/C)
[15] Toner empty sensor/K (PZS/K)

24.1.3 Back side

A. Board

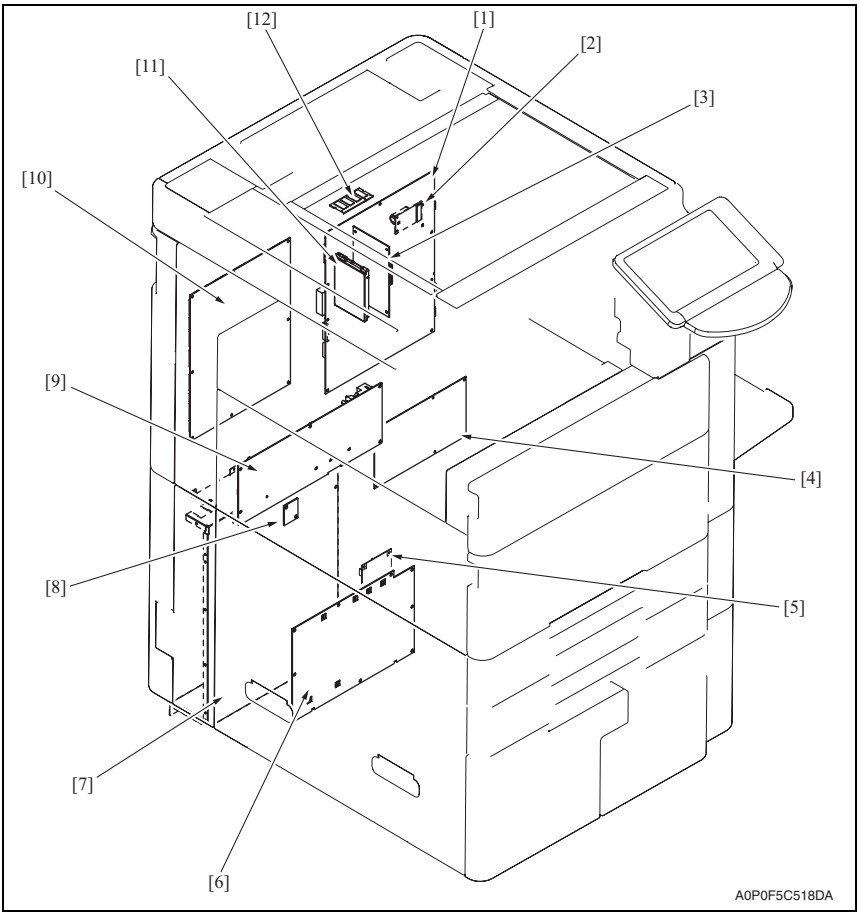

[1] MFP board (MFPB)
[2] NVRAM board (NRB)
[3] PCI board (PCIB)
[4] Paper feed/transport drive board (PFTDB)
[5] Relay drive board (REDB)
[6] High voltage unit/1 (HV1)
[7] DC power supply (DCPU)
[8] Service EEPROM board (SVERB)
[9] High voltage unit/2 (HV2)
[10] Printer control board (PRCB)
[11] Hard disk (HDD)
[12] DIMM0

B. Load

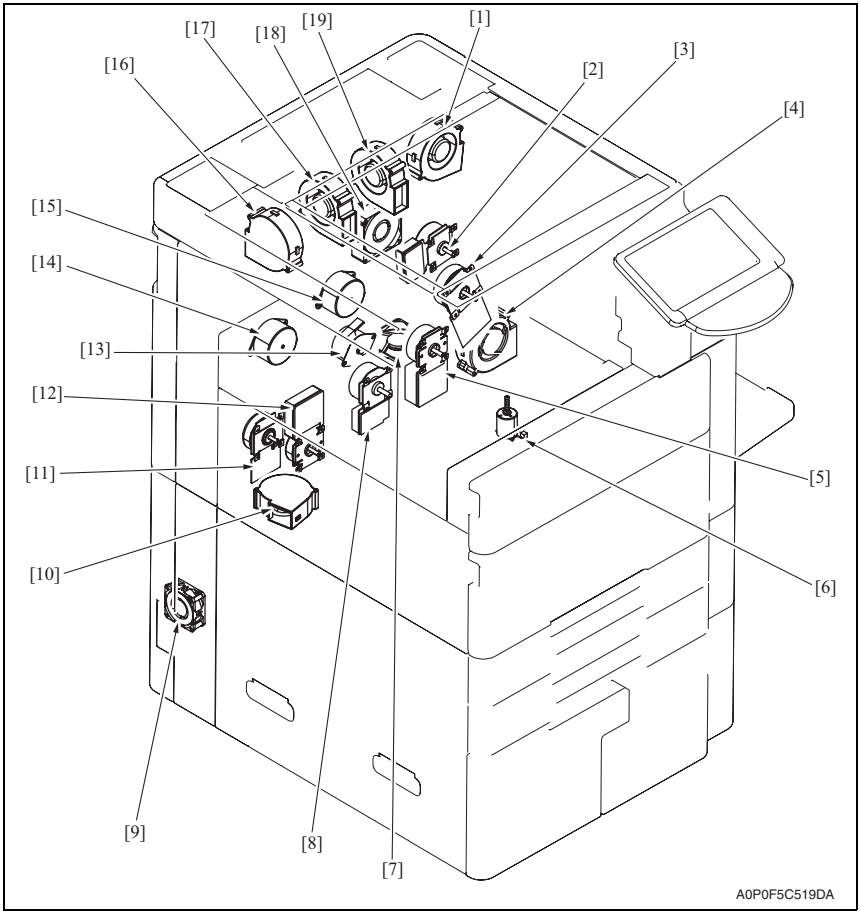

[1] Fusing cooling fan motor/1 (FM2)
[2] Transfer belt motor (M1)
[3] K PC drum motor (M18)
[4] Ozone ventilation fan motor (FM6)
[5] K developing motor (M19)
[6] Charge cleaning motor/K (M15)
[7] MFP control board cooling fan motor (FM17)
[8] Color PC drum motor (M16)
[9] Power supply cooling fan motor (FM9)
[10] IU cooling fan motor (FM15)
[11] Cleaner motor (M38)
[12] Color developing motor (M17)
[13] 1st transfer pressure retraction motor (M21)
[14] Toner cartridge motor Y/M (M13)
[15] Toner cartridge motor C/K (M14)
[16] Toner suction fan motor (FM7)
[17] Cooling fan motor (FM3)
[18] Rear side cooling fan motor (FM16)
[19] Paper cooling fan motor (FM13)

C. Switch/sensor/others

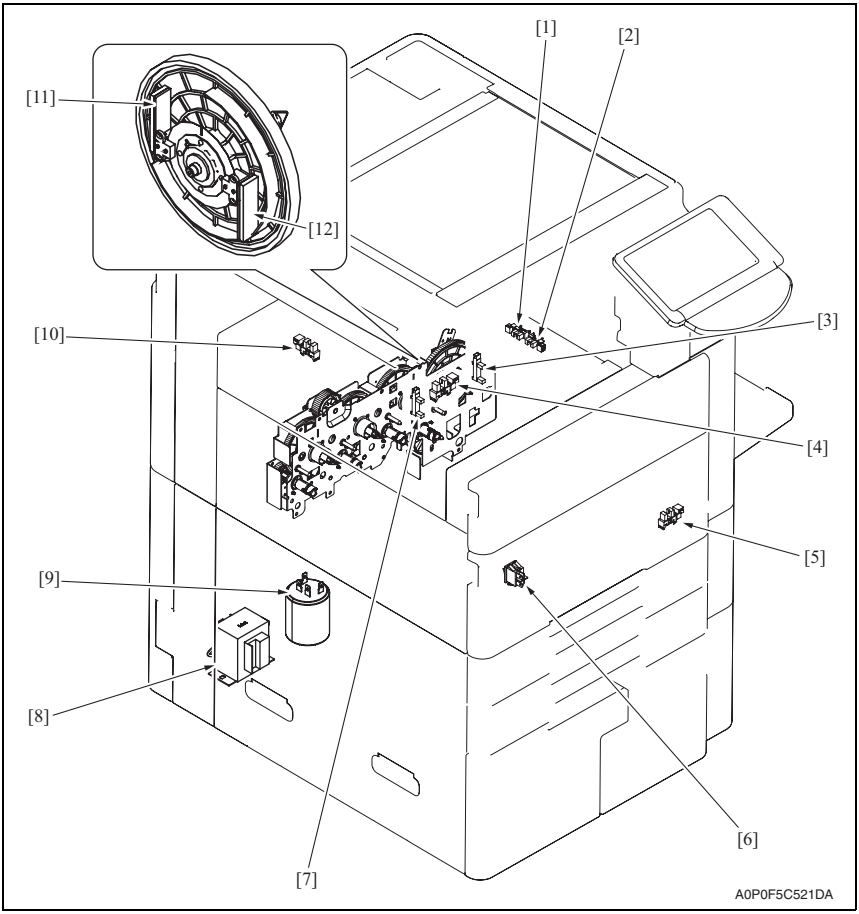

[1] Loop amount detection sensor/1 (PS41)
[2] Loop amount detection sensor/2 (PS42)
[3] Pressure welding alienation sensor/K (PS51)
[4] Charging cleaner home sensor (PS43)
[5] Charging cleaner return sensor (PS44)
[6] Dehumidification heater switch (SW2)
[7] Pressure welding alienation sensor/color (PS52)
[8] Dehumidifier heater transformer (T1)
[9] Noise filter (NF1) *200 V area only
[10] USB cover sensor (PS60)
[11] K PC encoder sensor/1 (PS45)
[12] K PC encoder sensor/2 (PS46)

24.1.4 Around the write section

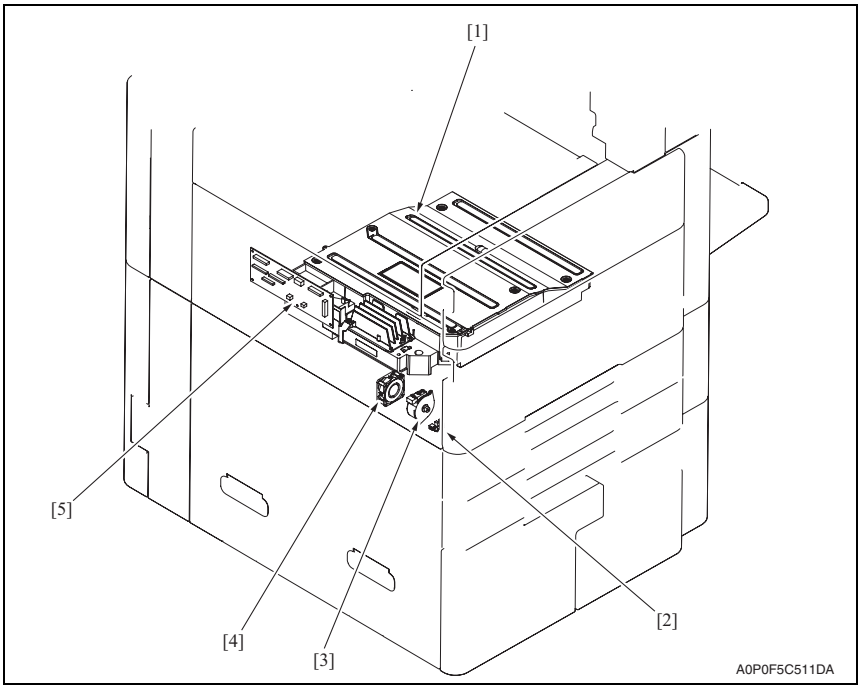

[1] PH unit

[2] Waste toner agitating motor lock sensor (PS23)

[3] Waste toner agitating motor (M20)

[4] PH cooling fan motor (FM14)

[5] PH relay board (REYB/PH)

24.1.5 Manual bypass tray

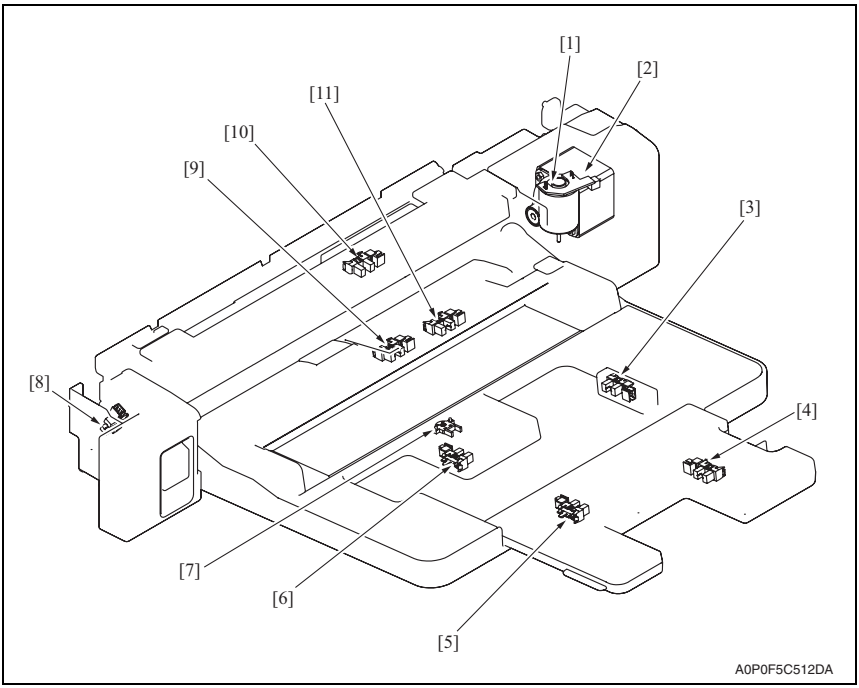

[1] Bypass tray up down motor (M28)
[2] Bypass paper feed motor (M27)
[3] Bypass sub tray set sensor (PS37)
[4] Multi FD size sensor/3 (PS33)
[5] Multi FD size sensor/2 (PS32)
[6] Multi FD size sensor/1 (PS31)
[7] Bypass paper width detection resistor (VR1)
[8] Bypass set sensor (PS30)
[9] Bypass paper empty sensor (PS34)
[10] Bypass paper limit sensor (PS35)
[11] Bypass paper lower sensor (PS36)

24.1.6 Tray 1

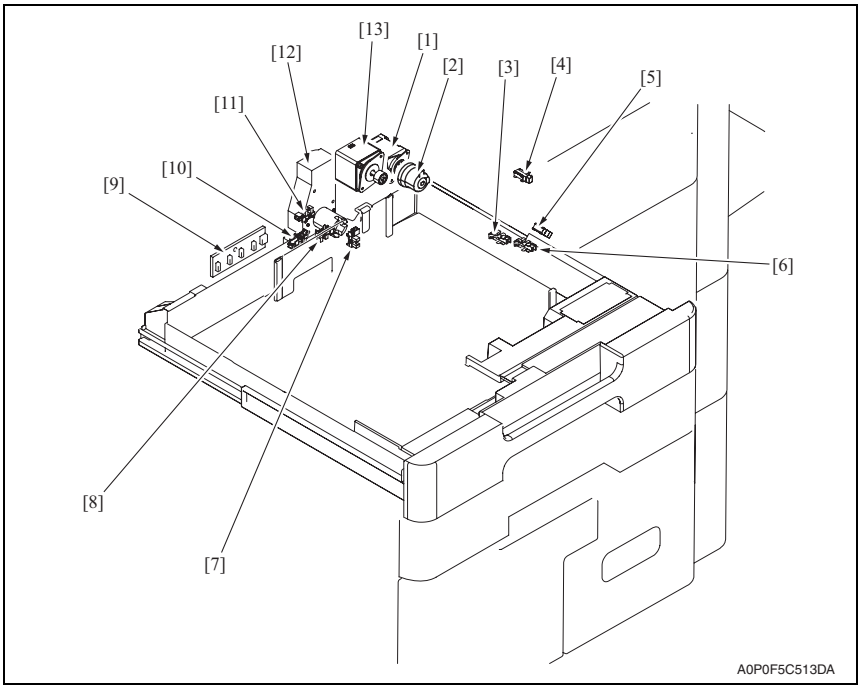

[1] Tray1 vertical transport motor (M5)
[2] Tray 1 paper feed clutch (CL1)
[3] Tray1 upper limit sensor (PS6)
[4] Tray1 vertical transport sensor (PS4)
[5] Tray1 paper feed sensor (PS5)
[6] Tray1 paper empty sensor (PS2)
[7] Tray1 near empty sensor (PS3)
[8] Tray1 CD paper size sensor/1 (PS7)
[9] Paper size detect board/1 (PSDTB/1)
[10] Tray1 CD paper size sensor/2 (PS8)
[11] Tray1 device detection sensor (PS1)
[12] Tray1 lift-up motor (M6)
[13] Take-up motor (M22)

24.1.7 Tray 2

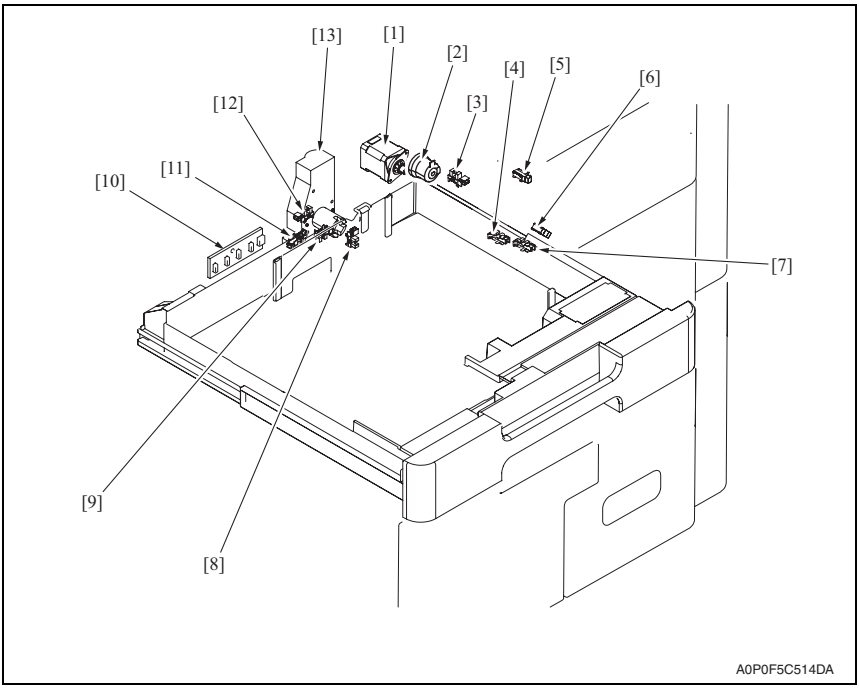

[1] Tray2 vertical transport motor (M7)
[2] Tray2 paper feed clutch (CL2)
[3] Tray2 door set sensor (PS17)
[4] Tray2 upper limit sensor (PS14)
[5] Tray2 vertical transport sensor (PS12)
[6] Tray2 paper feed sensor (PS13)
[7] Tray2 paper empty sensor (PS10)
[8] Tray2 near empty sensor (PS11)
[9] Tray2 CD Paper size sensor/1 (PS15)
[10] Paper size detect board/2 (PSDTB/2)
[11] Tray2 CD Paper size sensor/2 (PS16)
[12] Tray2 device detection sensor (PS9)
[13] Tray2 lift-up motor (M8)

24.1.8 Tray 3

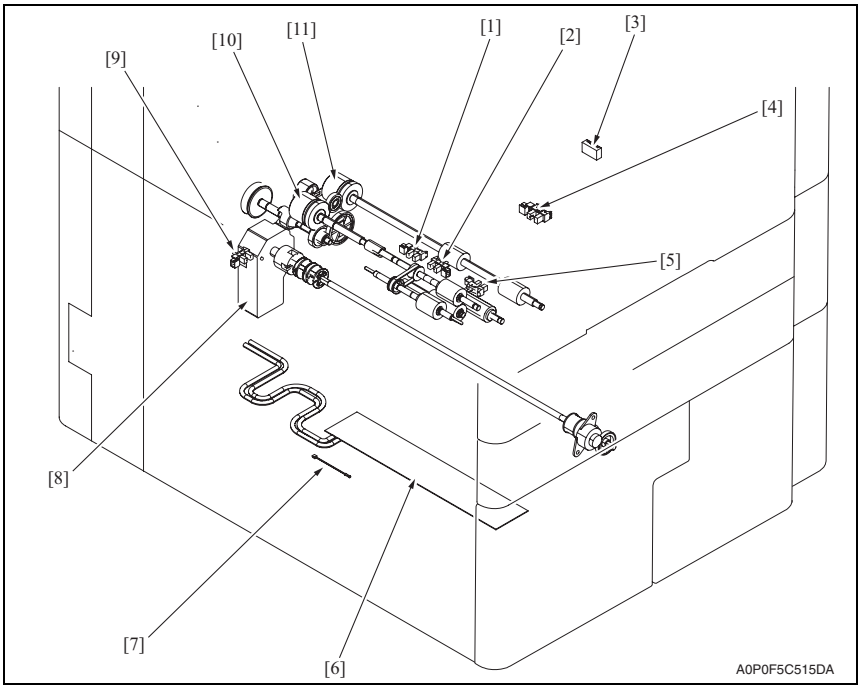

[1] Tray3 near empty sensor (PS20)
[2] Tray3 paper empty sensor (PS19)
[3] Intermediate roller sensor (PS28)
[4] Horizontal transport sensor (PS29)
[5] Tray3 paper feed sensor (PS21)
[6] Tray3 dehumidifier heater (DH1)
[7] Paper temperature thermistor (TH8)
[8] Tray3 lift-up motor (M23)
[9] Tray3 upper limit sensor (PS22)
[10] Tray3 paper feed clutch (CL5)
[11] Tray3 transport clutch (CL6)

24.1.9 Tray 4

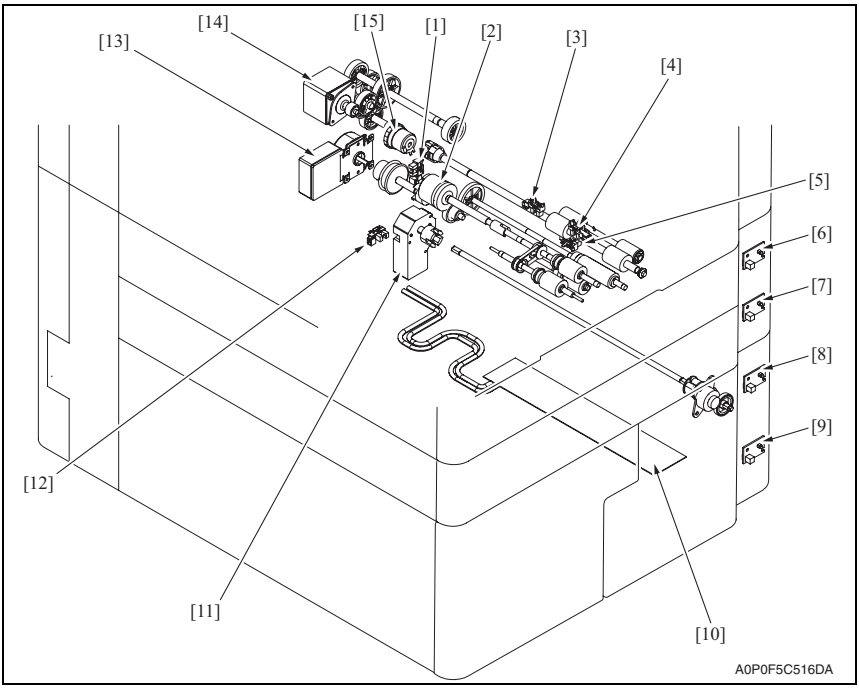

[1] Horizontal transport set sensor (PS58)
[2] Tray4 paper feed clutch (CL7)
[3] Tray4 near empty sensor (PS25)
[4] Tray4 paper empty sensor (PS24)
[5] Tray4 paper feed sensor (PS26)
[6] Tray1 paper empty indicator board (PEIB/1)
[7] Tray2 paper empty indicator board (PEIB/2)
[8] Tray3 paper empty indicator board (PEIB/3)
[9] Tray4 paper empty indicator board (PEIB/4)
[10] Tray4 dehumidifier heater (DH2)
[11] Tray4 lift-up motor (M24)
[12] Tray4 upper limit sensor (PS27)
[13] Transport motor (M25)
[14] Vertical transport motor (M26)
[15] Horizontal Transport clutch (CL3)

24.1.10 2nd transfer section

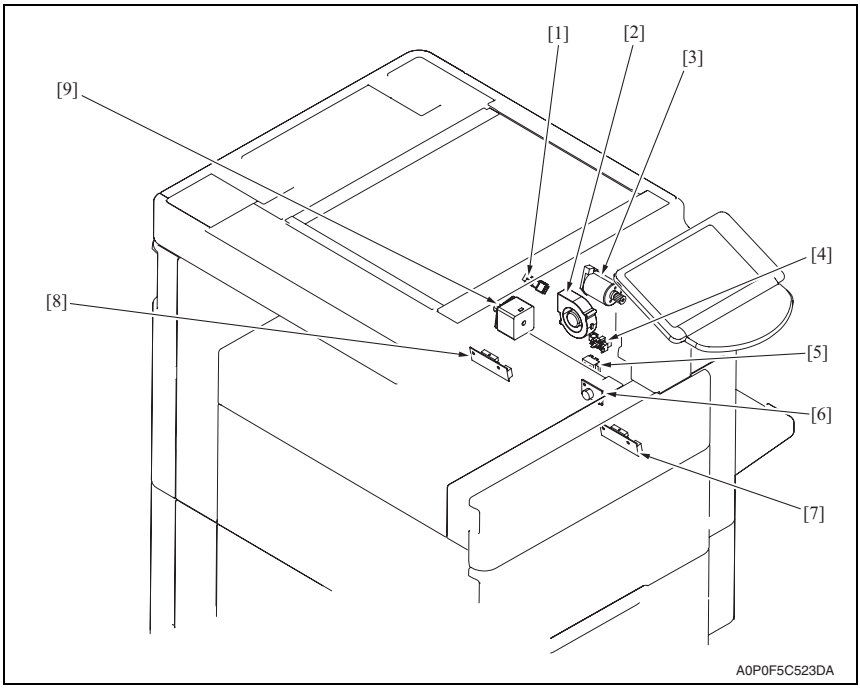

[1] Pressure welding alienation sensor (PS50)
[2] Suction fan motor (FM1)
[3] 2nd transfer pressure retraction motor (M3)
[4] Timing roller sensor (PS38)
[5] OHP detection sensor (PS40)
[6] Temperature/humidity sensor (TEM/HUMS)
[7] IDC registration sensor/F (IDCS/F)
[8] IDC registration sensor/R (IDCS/R)
[9] Registration motor (M2)

24.1.11 Duplex section

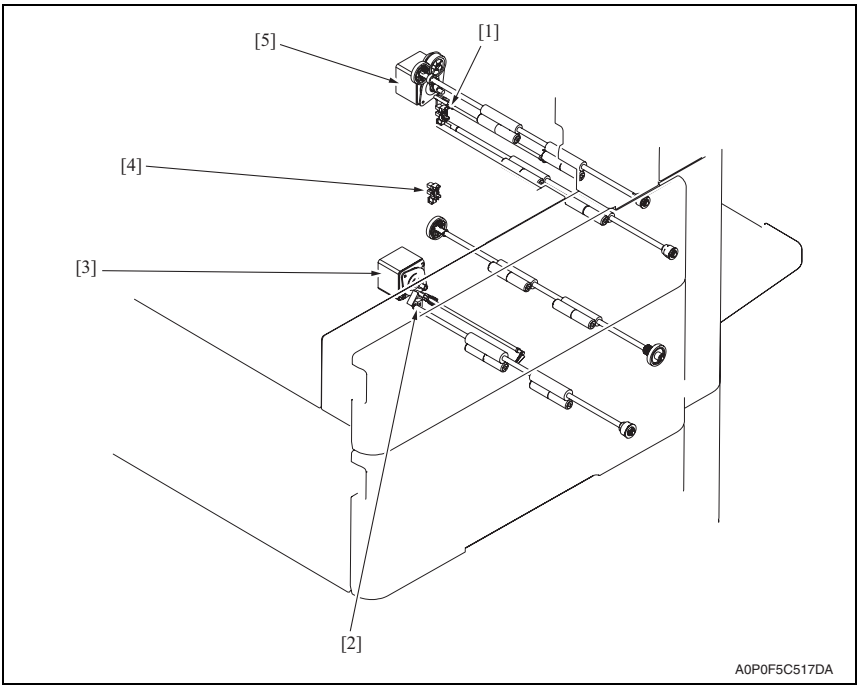

[1] ADU paper passage sensor/1 (PS47)
[2] ADU paper passage sensor/2 (PS48)
[3] ADU transport motor/2 (M32)
[4] ADU door sensor (PS49)
[5] ADU transport motor/1 (M31)

24.1.12 Fusing/paper exit section

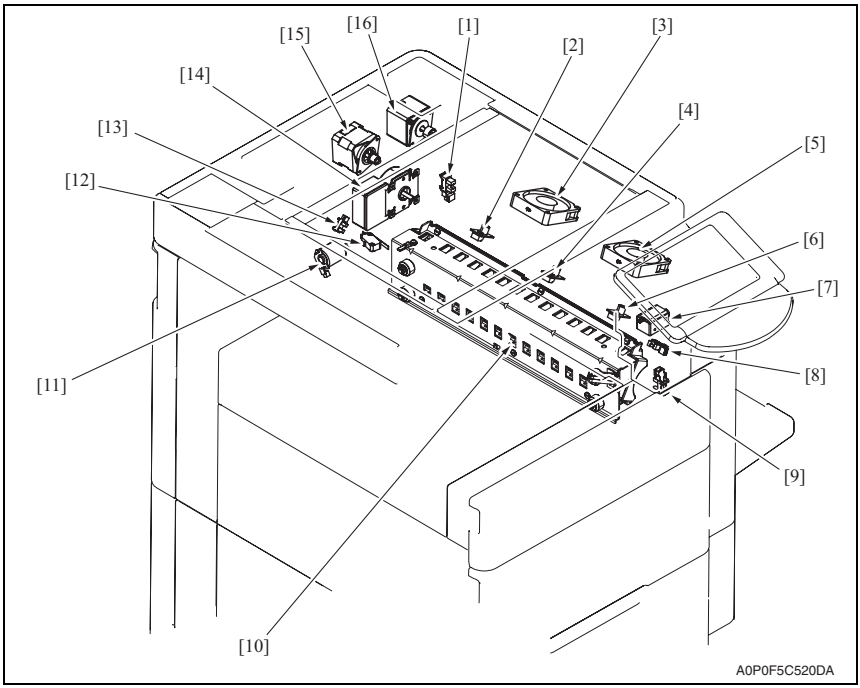

[1]	Heating roller rotation sensor/1 (PS56)	[9]	Pressure home sensor (PS55)
[2]	Heating roller temperature sensor/2 (TEMS2)	[10]	IH coil (FH1)
[3]	Fusing cooling fan motor/3 (FM5)	[11]	Fusing pressure retraction motor (M29)
[4]	Heating roller temperature sensor (TEMS1)	[12]	Right door switch (MS2)
[5]	Fusing cooling fan motor/2 (FM4)	[13]	Fusing retraction position sensor (PS59)
[6]	Heating roller temperature sensor/3 (TEMS3)	[14]	Fusing motor (M30)
[7]	Gate switch solenoid (SD1)	[15]	Exit motor (M4)
[8]	Paper exit sensor (PS39)	[16]	Switchback Motor (M33)

24.2 DF-618/SP-501

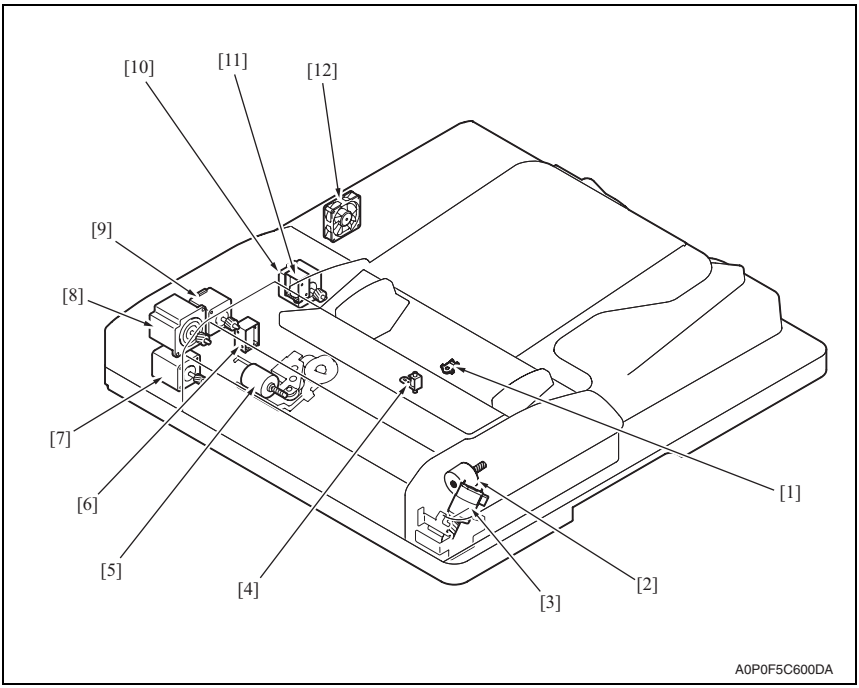

[1] Document width detection variable resistor (VR1)
[2] Switchback roller pressure/retraction motor (M5)
[3] Reading roller pressure/retraction motor (M4)
[4] Stamp solenoid (SD3) *
[5] Lift-up motor (M6)
[6] Exit switch back solenoid (SD2)
[7] Reading motor (M1)
[8] Registration motor (M7)
[9] Take-up motor (M2)
[10] Exit motor (M3)
[11] Switch back solenoid (SD1)
[12] Cooling fan (FM1)

*: Option

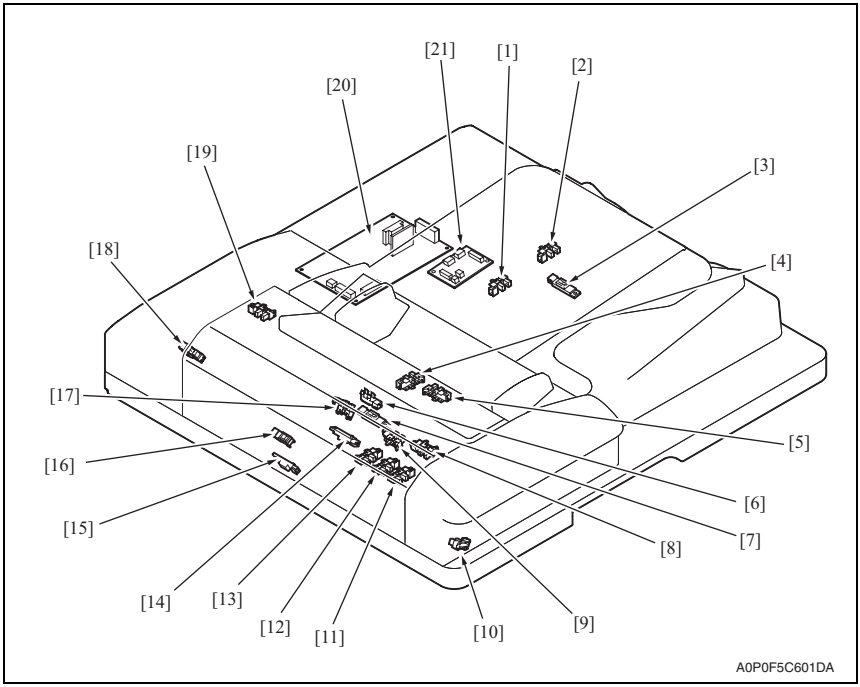

[1] Length sensor/1 (PS10)
[2] Length sensor/3 (PS12)
[3] Length sensor/2 (PS11)
[4] Lift-up upper sensor (PS16)
[5] Empty sensor (PS14)
[6] After separate sensor (PS4)
[7] Original set sensor (PS20)
[8] Reverse roller sensor (PS7)
[9] Lift up lower sensor (PS15)
[10] Read roller sensor (PS6)
[11] Consolidation/3 (PS17)
[12] Consolidation/2 (PS18)
[13] Consolidation/1 (PS19)
[14] Reverse registration sensor (PS8)
[15] Before read sensor (PS9)
[16] Registration sensor (PS3)
[17] Exit sensor (PS5)
[18] Read open/close sensor (PS2)
[19] Feed open/close sensor (PS1)
[20] DF control board (DFCB)
[21] Relay board (REYB)

24.3 LU-301 (Option)

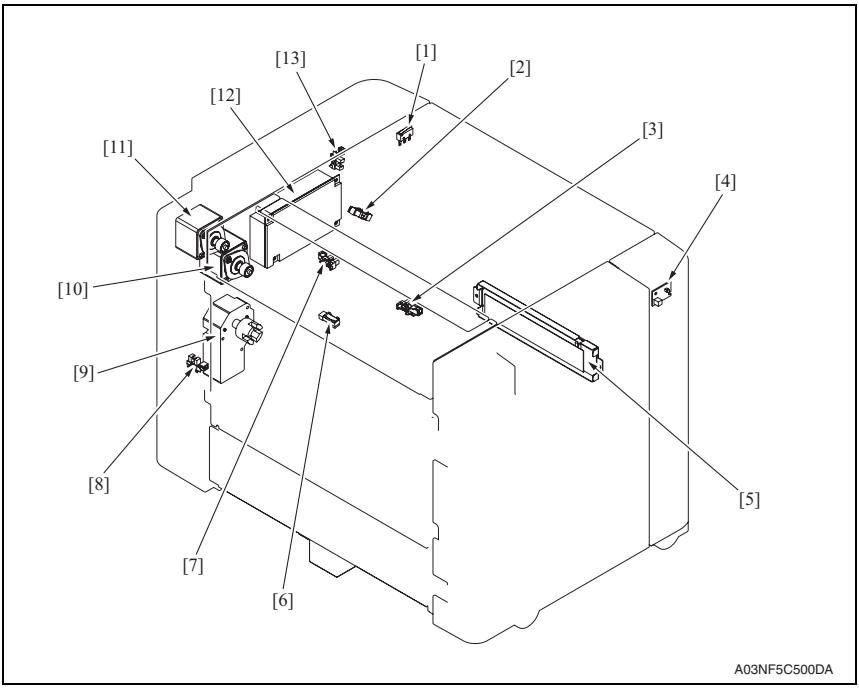

[1] LU door switch (MS1)
[2] Near empty sensor /2 (PS6)
[3] Paper empty sensor(PS4)
[4] Tray LED(LED)
[5] Dehumidification heater (DH)
[6] Paper feed sensor(PS3)
[7] Upper limit sensor(PS2)
[8] Tray set sensor (PS1)
[9] Lift-up motor (M1)
[10] Paper feed motor (M2)
[11] Transport motor (M3)
[12] LU drive board (LUDB)
[13] Near empty sensor /1 (PS5)

24.4 LU-204 (Option)

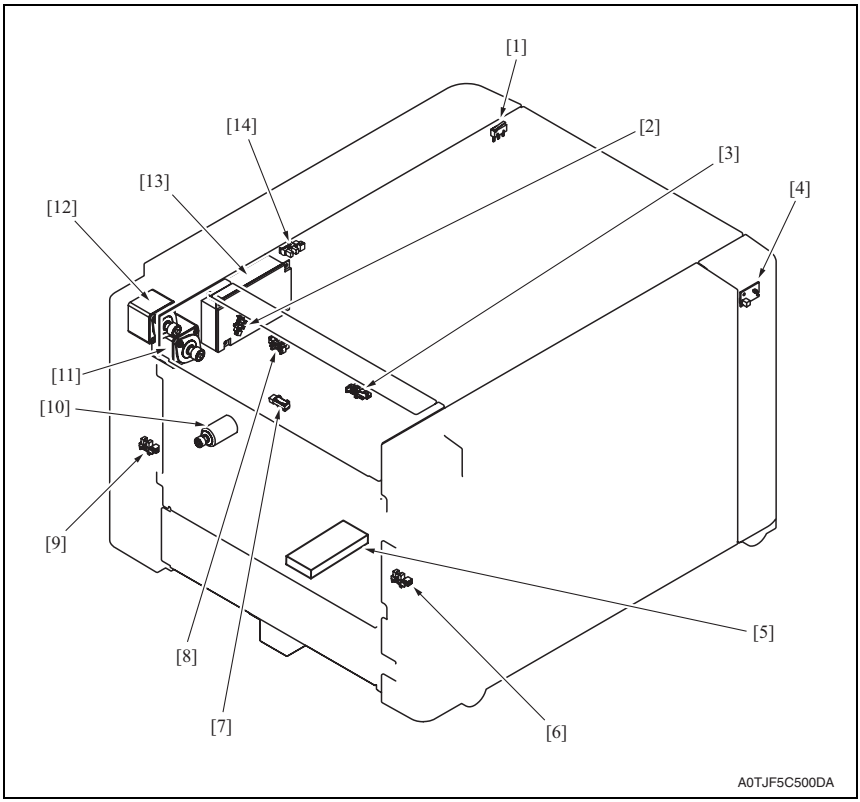

[1] LU door switch (MS1)
[2] Near empty sensor /2 (PS6)
[3] Paper empty sensor(PS4)
[4] Tray LED(LED)
[5] Dehumidification heater (DH)
[6] Tray set sensor/2 (PS7)
[7] Paper feed sensor(PS3)
[8] Upper limit sensor(PS2)
[9] Tray set sensor/1 (PS1)
[10] Lift-up motor (M1)
[11] Paper feed motor (M2)
[12] Transport motor (M3)
[13] LU drive board (LUDB)
[14] Near empty sensor /1 (PS5)

24.5 JS-504 (Option)

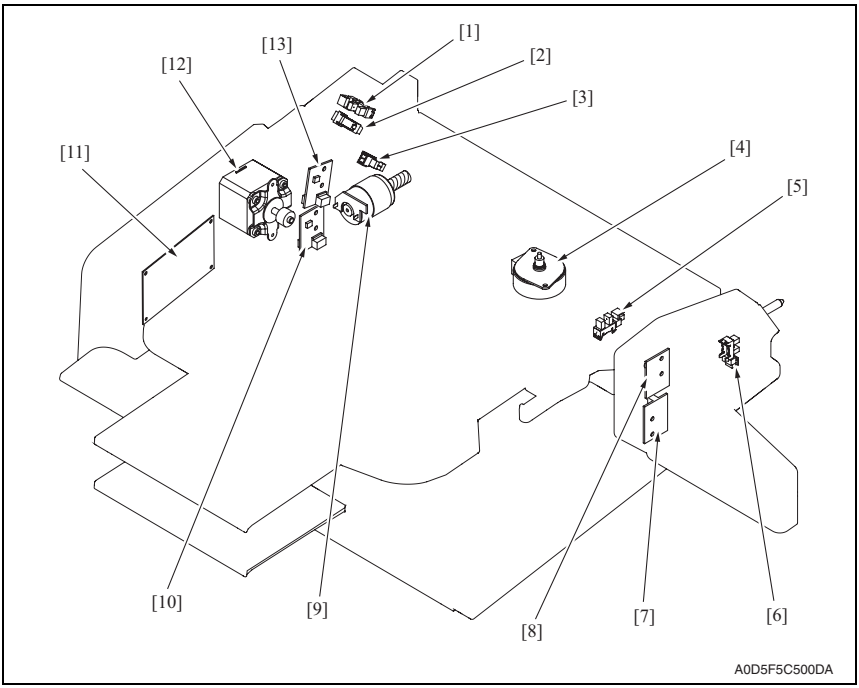

[1] Upper tray exit sensor (PS2)

[2] Lower tray exit sensor (PS1)

[3] Route change home sensor (PS4)

[4] Shift motor (M2)

[5] Shift home sensor (PS6)

[6] Front door sensor (PS3)

[7] Lower tray paper full detect board/LED (T1FDTB/LED)

[8] Upper tray paper full detect board/LED (T2FDTB/LED)

[9] Route change motor (M3)

[10] Lower tray paper full detect board/PR (T1FDTB/PR)

[11] JS control board (JSCB)

[12] Transport motor (M1)

[13] Upper tray paper full detect board/PR (T2FDTB/PR)

24.6 JS-603 (Option)

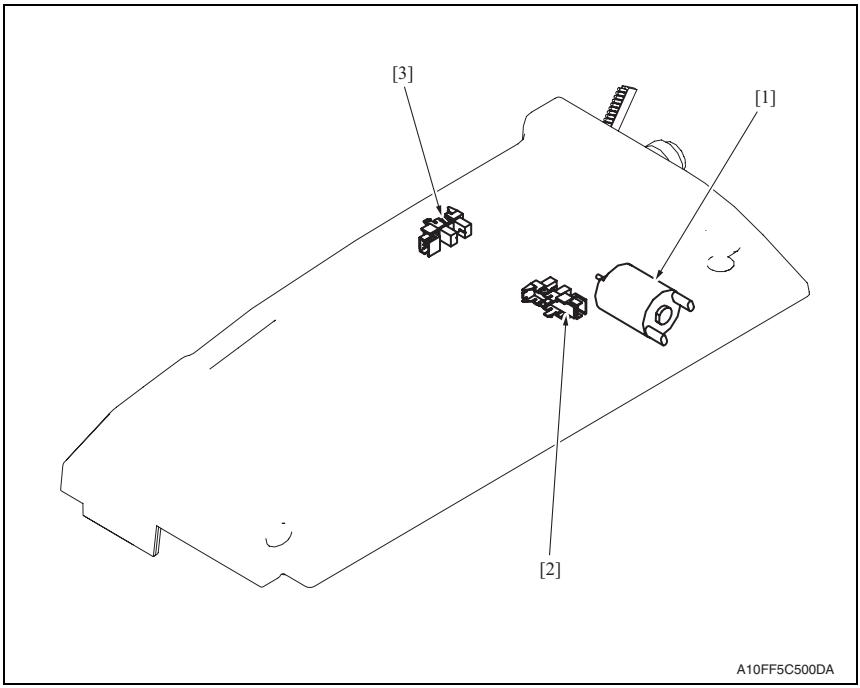

[1] Tray3 exit roller retraction motor (M17)
[2] Tray3 exit roller retraction sensor (PS35)
[3] Tray3 full sensor (PS36)

24.7 ZU-606 (Option)

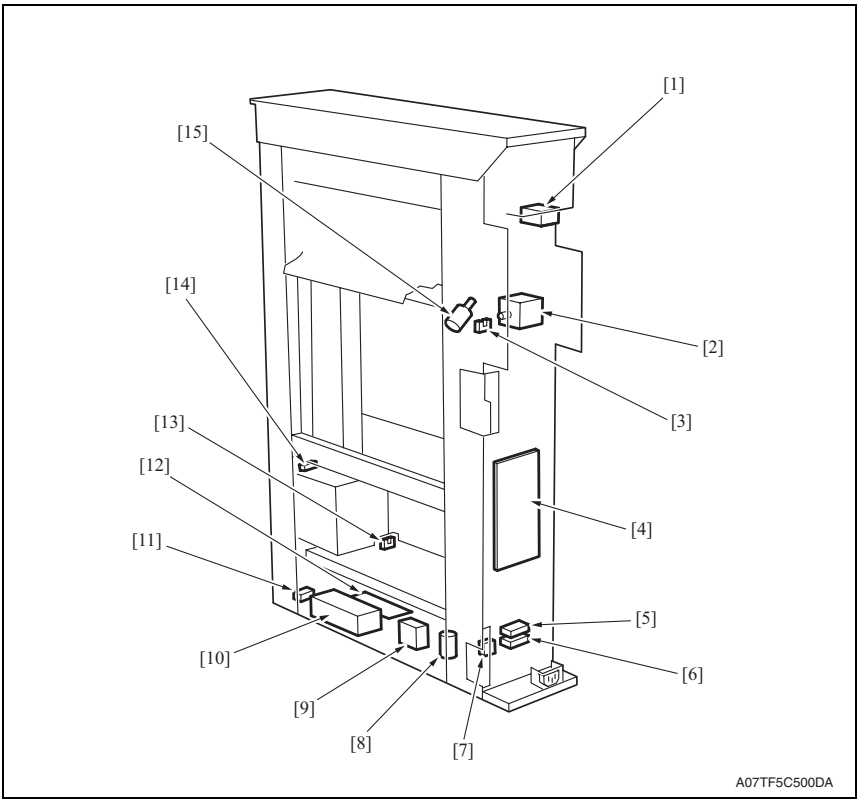

[1] Main motor cooling fan (FM601)
[2] Punch shift motor (M605)
[3] Punch shift home sensor (PS605)
[4] ZU control board (ZUCB)
[5] Circuit breaker/2 (CBR2)
[6] Circuit breaker/1 (CBR1)
[7] Power relay (RY1)
[8] Noise filter (NF1)
[9] Coil (COIL)
[10] DC power supply/1 (DCPU1)
[11] Door switch (MS602)
[12] DC power supply/2 (DCPU2)
[13] Punch scraps box set sensor (PS607)
[14] Punch scraps full sensor (PS608)
[15] Punch scraps conveyance motor (M607)

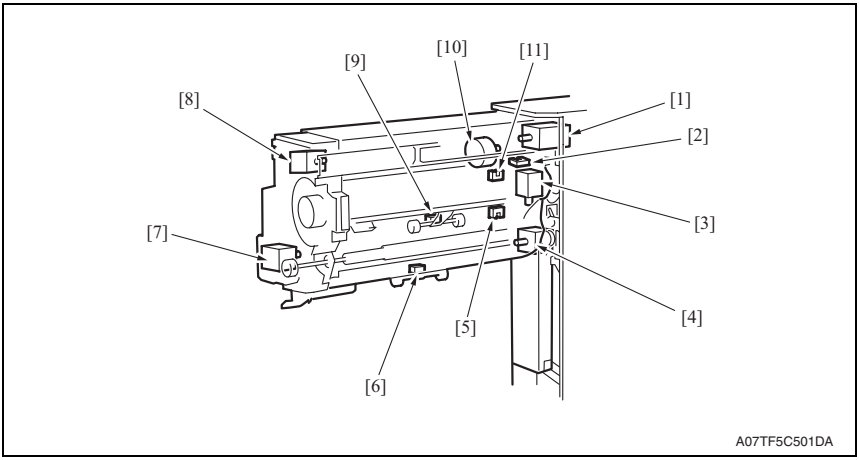

[1] Main motor (M606)
[2] Conveyance encoder sensor (PS610)
[3] Gate solenoid/Lw (SD601)
[4] Registration motor (M601)
[5] 2nd folding stopper home sensor (PS604)
[6] Exit sensor (PS609)
[7] 2nd folding stopper motor (M603)
[8] Gate solenoid/Up (SD602)
[9] Conveyance sensor (PS601)
[10] 1st folding stopper motor (M602)
[11] 1st folding stopper home sensor (PS603)

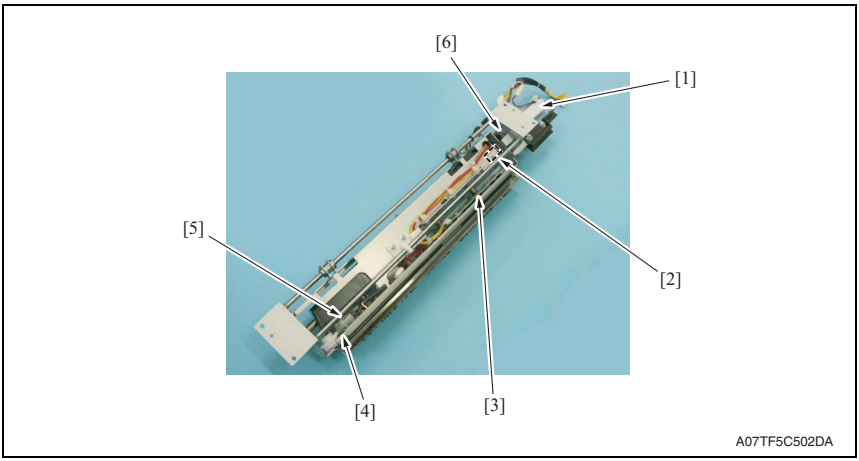

[1] Punch motor (M604)
[2] Punch home sensor (PS606)
[3] Paper size detect board (PSDTB)
[4] Punch switchover switch (MS601)
[5] Punch switchover motor (M608)
[6] Punch clutch (CL601)

24.8 OT-503 (Option)

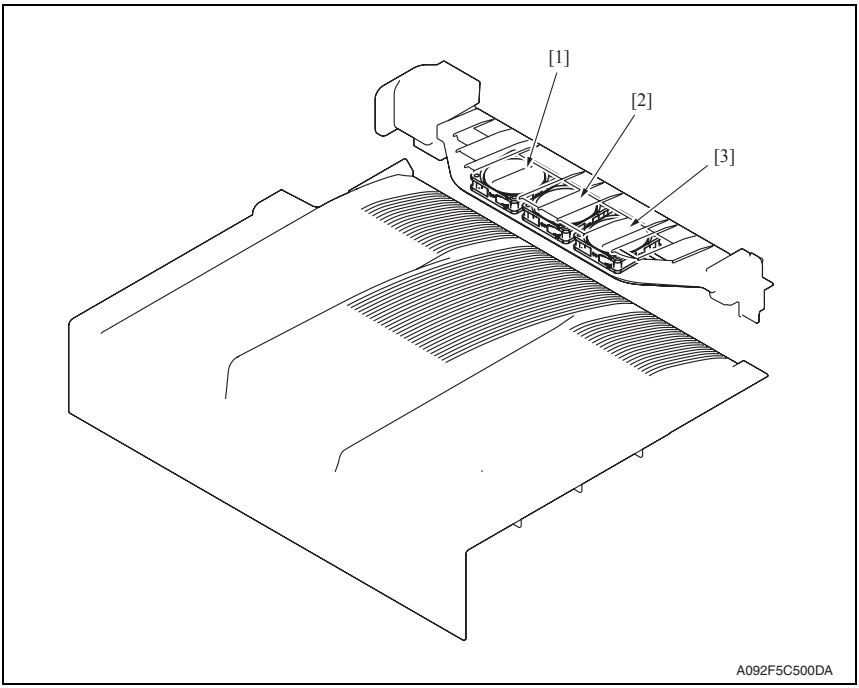

[1] Exit paper cooling fun motor/2 (FM102)
[2] Exit paper cooling fun motor/3 (FM103)
[3] Exit paper cooling fun motor/1 (FM101)

24.9 FS-526 (Option)

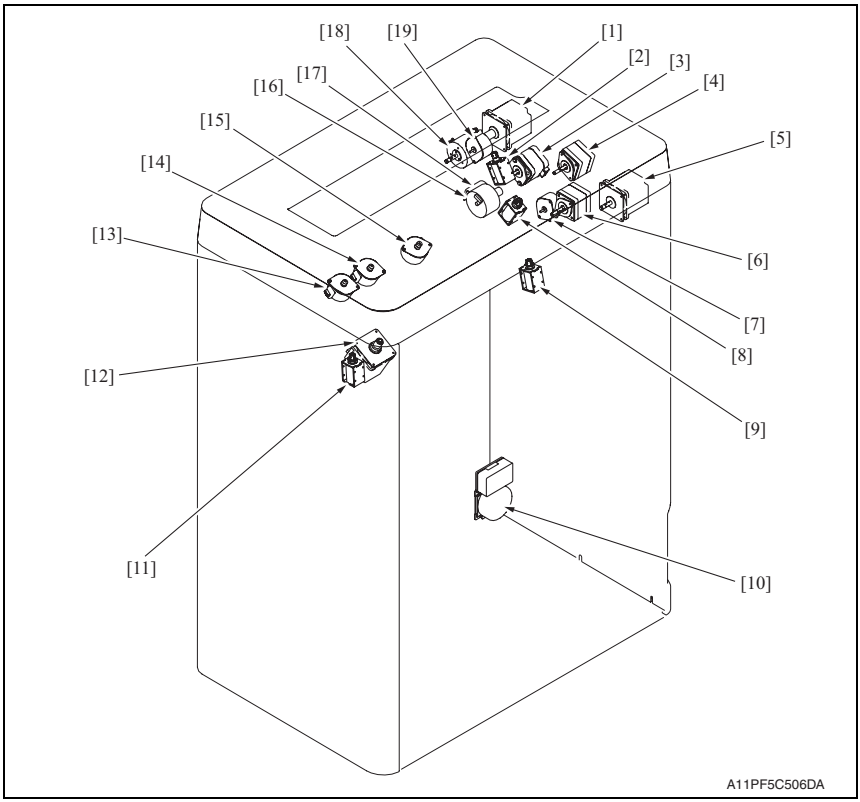

[1] Paper output roller motor (M6)
[2] Sub tray gate solenoid (SD3)
[3] Bypass transport motor (M3)
[4] Transport motor/2 (M2)
[5] Transport motor/1 (M1)
[6] Stacker entrance motor (M10)
[7] Trail edge paddle motor (M15)
[8] Bypass gate solenoid (SD2)
[9] Route change gate solenoid (SD1)
[10] Main tray lift motor (M5)
[11] Switch back solenoid (SD4)
[12] 2 staples stapler movement motor (M13)
[13] Alignment plate motor/F (M11)
[14] Alignment plate motor/R (M12)
[15] 2 staples trail edge stopper motor (M19)
[16] Paddle motor (M16)
[17] Stacker plate motor (M17)
[18] Exit roller motor (M4)
[19] Rewind paddle motor (M18)

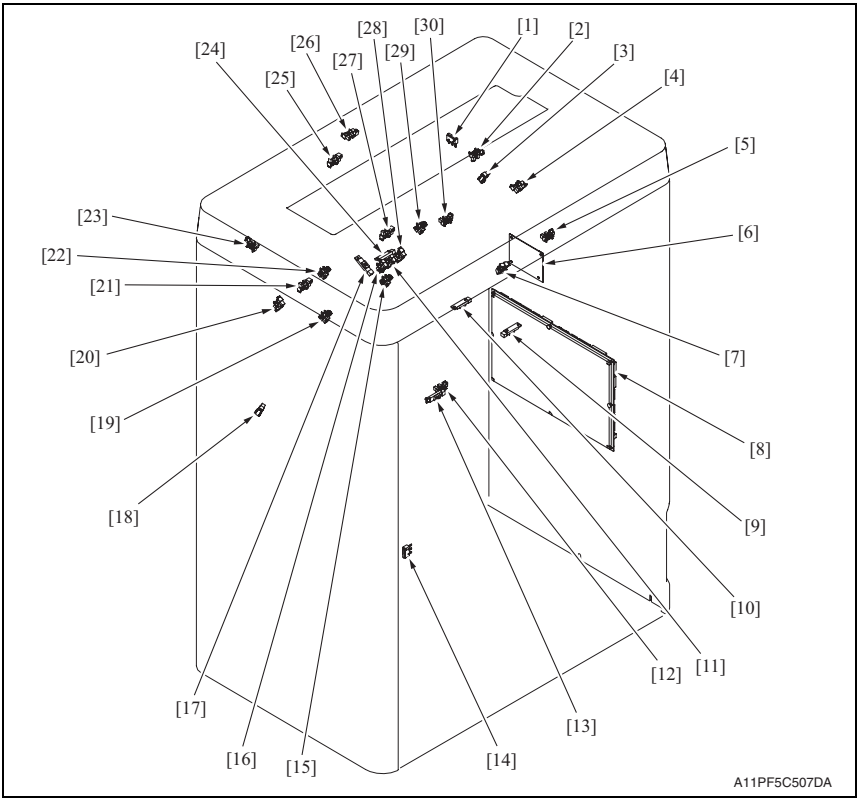

[1] Shutter open/close switch (MS2)
[2] Rewind paddle home sensor (PS16)
[3] Paper output roller home sensor (PS10)
[4] Trail edge paddle home sensor (PS20)
[5] 2 staples paddle phase sensor (PS19)
[6] Interlock board (IRB)
[7] Stapler position sensor/1 (PS50)
[8] FS control board (FSCB)
[9] FNS pass sensor (PS1)
[10] Z-fold Punch regist sensor (PS2)
[11] 2 staples trail edge stopper standby sensor/1 (PS23)
[12] Main tray lower limit sensor (PS5)
[13] Center staple pass sensor (PS12)
[14] Door switch (MS1)
[15] Stapler position sensor/2 (PS51)
[16] 2 staples trail edge stopper home sensor (PS22)
[17] 2 staples stacker empty sensor (PS15)
[18] Stapler position sensor/4 (PS53)
[19] Stapler position sensor/3 (PS52)
[20] 2 staples alignment motor home sensor/F (PS17)
[21] Staple paper exit top surface sensor (PS7)
[22] Stacker plate home sensor (PS11)
[23] Shutter open/close sensor (PS24)
[24] 2 staples stacker sensor (PS3)
[25] Sub tray full sensor (PS9)
[26] Sub tray exit sensor (PS8)
[27] Main tray top surface sensor (PS4)
[28] 2 staples trail edge stopper standby sensor/2 (PS42)
[29] 2 staples alignment motor home sensor/R (PS18)
[30] Main tray empty sensor (PS6)

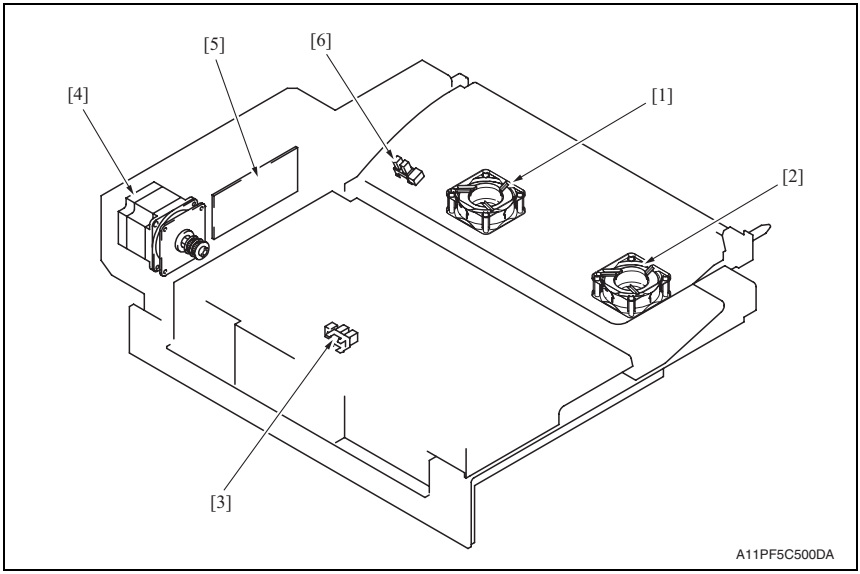

[1] Fan motor/2 (FM2)
[2] Fan motor/1 (FM1)
[3] Paper pass sensor (PS202)
[4] Transport motor (M201)
[5] Transport control board (TRCB)
[6] Door open/close sensor (PS201)

24.10 SD-508 (Option)

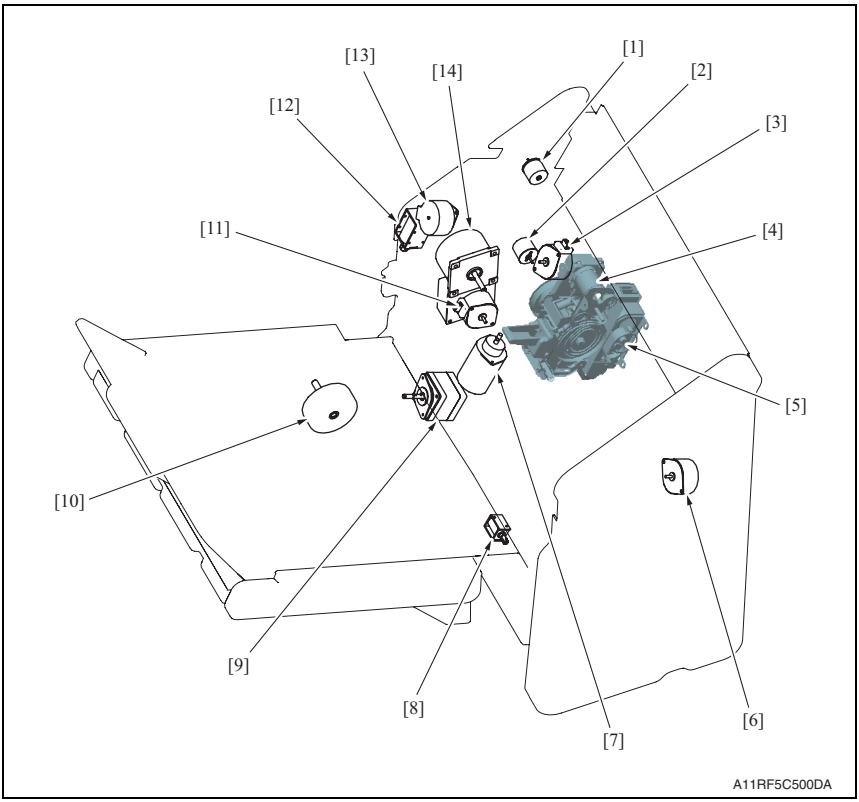

[1] Center staple paddle/T (M29)
[2] Center staple paddle/C (M30)
[3] Center staple alignment motor /R (M21)
[4] Staple motor (M24)
[5] Clincher motor (M25)
[6] Center staple alignment motor /F (M20)
[7] Center fold knife motor (M32)
[8] Exit grip solenoid (SD6)
[9] Leading edge stopper motor (M22)
[10] Exit motor (M34)
[11] Center staple paddle lift motor/C (M26)
[12] Tri-folding change solenoid (SD5)
[13] Center staple motor (M23)
[14] Transport motor (M33)

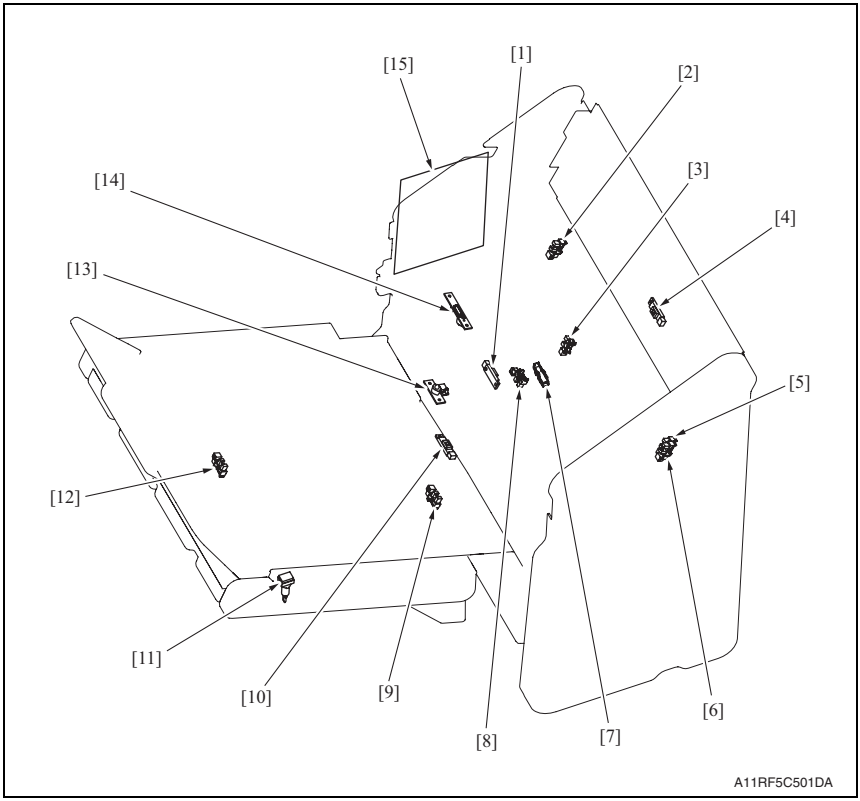

[1]	Center staple stacker empty sensor/2 (PS39)	[9]	Leading edge stopper home sensor (PS32)
[2]	Center staple alignment motor home sensor/R (PS31)	[10]	SD exit full sensor (PS35)
[3]	Center fold knife home sensor (PS34)	[11]	Lift up switch (SW3)
[4]	Center staple stacker empty sensor/1 (PS26)	[12]	SD exit upper limit sensor (PS41)
[5]	Stapler home sensor (PS33)	[13]	SD exit sensor/LED (PS28)
[6]	Center staple alignment motor home sensor/F (PS30)	[14]	SD exit sensor/PR (PS29)
[7]	Paddle home sensor/C (PS37)	[15]	SD drive board (SDDB)
[8]	Fold sensor (PS27)		

24.11 PK-516 (Option)

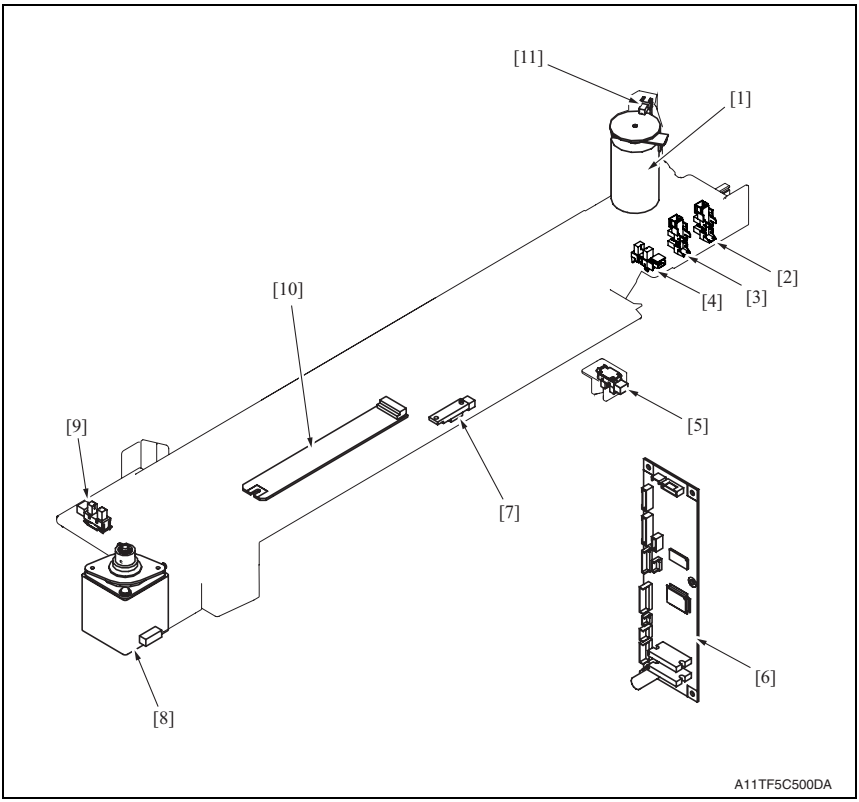

[1] Punch drive motor (M301)
[2] PK punch front sensor (PS308)
[3] 2 hole position sensor (PS307)
[4] Punch drive motor (PS301)
[5] PK punch scraps box set sensor (PS304)
[6] Punch control board (PKDB)
[7] PK punch scraps box full sensor (PS302)
[8] Punch oscillating motor (M302)
[9] PK punch oscillating home sensor (PS303)
[10] Paper size detect board (PSDTB)
[11] Punch motor pulse sensor (PS306)

24.12 JS-602 (Option)

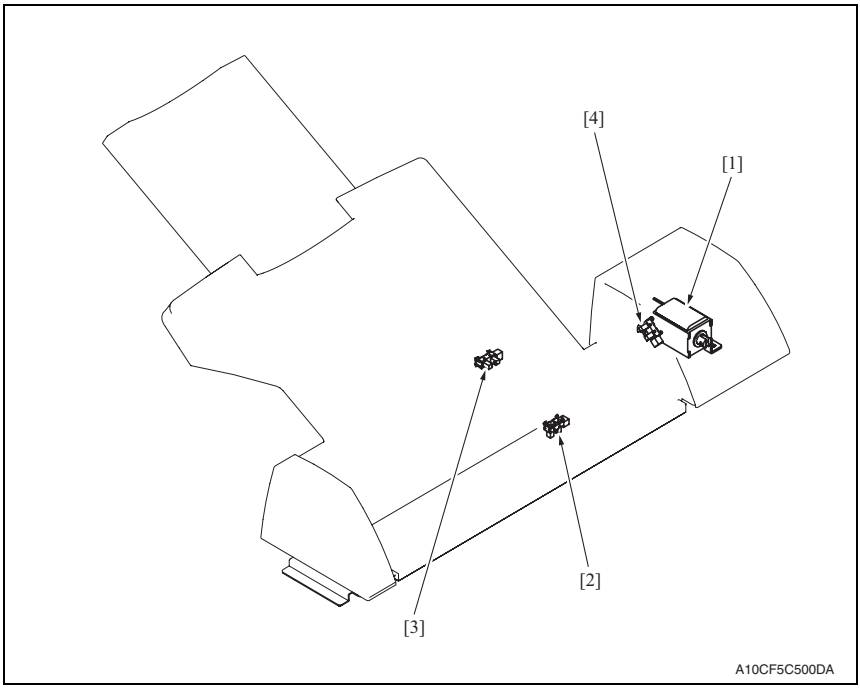

[1] 3rd Entrance switching solenoid (SD401)
[2] Job tray paper exit sensor (PS402)
[3] Job tray full sensor(PS403)
[4] Job tray cover sensor (PS401)

24.13 PI-505 (Option)

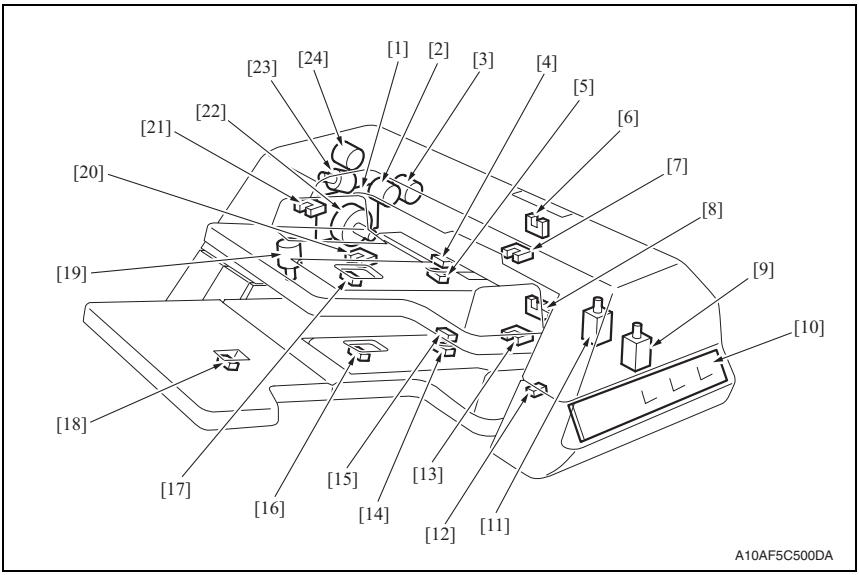

[1] PI drive board (PIDB)
[2] Transfer clutch /Lw (CL202)
[3] Registration clutch (CL203)
[4] Paper empty sensor /Up (PS202)
[5] Paper size VR /Up (VR201)
[6] Paper entrance sensor /Up (PS201)
[7] Tray upper limit sensor /Up (PS204)
[8] Paper entrance sensor /Lw (PS206)
[9] Pick-up solenoid /Lw (SD202)
[10] PI control board (PIOB)
[11] Pick-up solenoid /Up (SD201)
[12] Upper door open/close switch (MS205)
[13] Tray upper limit sensor /Lw (PS209)
[14] Paper size VR /Lw (VR202)
[15] Paper empty sensor /Lw (PS207)
[16] Paper set sensor /Lw (PS208)
[17] Paper set sensor /Up (PS203)
[18] L size sensor /Lw (PS212)
[19] Tray lift motor /Lw (M202)
[20] Tray lower limit sensor /Lw (PS210)
[21] Tray lower limit sensor /Up (PS205)
[22] Transfer motor (M203)
[23] Tray lift motor /Up (M201)
[24] Transfer clutch /Up (CL201)

24.14 FS-527 (Option)

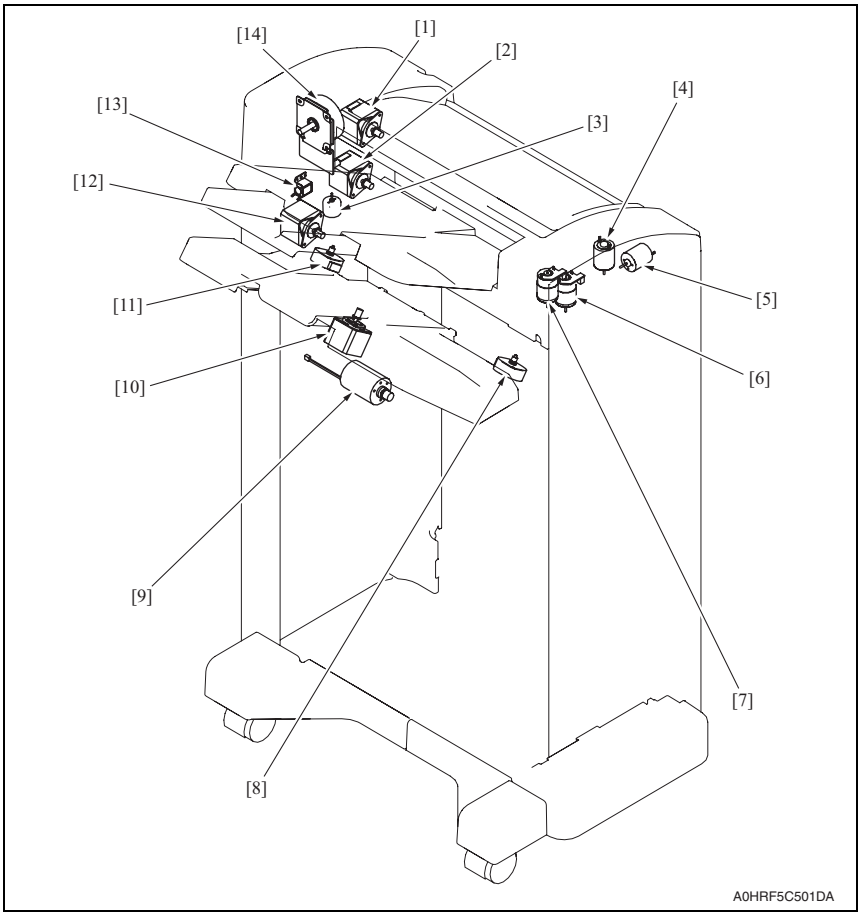

[1]	Paper passage motor/2 (M3)	[8]	Leading edge stopper motor (M14)
[2]	Conveyance motor (M4)	[9]	Tray1 shift motor (M16)
[3]	Accommodation paddle motor (M12)	[10]	Stapler movement motor (M11)
[4]	Tray2 path switching motor (M8)	[11]	Alignment plate motor (M13)
[5]	Upper lower path switching motor (M6)	[12]	Exit motor (M5)
[6]	Accommodation roller retraction motor (M10)	[13]	Accommodation paddle solenoid (SD1)
[7]	Exit roller retraction motor (M9)	[14]	Elevate motor (M15)

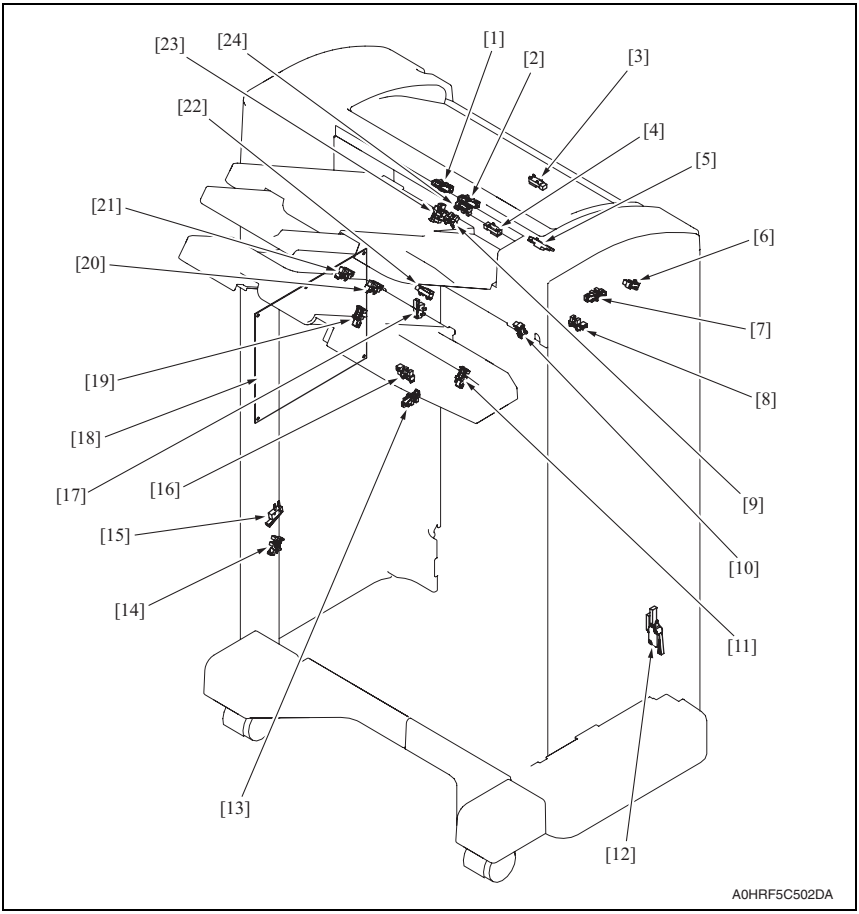

[1] Tray2 full sensor (PS22)
[2] Upper door sensor (PS14)
[3] Registration sensor (PS10)
[4] lower path sensor (PS9)
[5] Punch hole full sensor (PS30)
[6] Upper lower path switching sensor (PS26)
[7] Tray2 path switching home sensor (PS7)
[8] Accommodation roller pressure sensor (PS13)
[9] Upper path sensor (PS8)
[10] Exit roller pressure sensor (PS12)
[11] Stapler home sensor/2 (PS19)
[12] Front door switch (SW1)
[13] Tray1 shift home sensor (PS25)
[14] Tray1 lower position sensor (PS21)
[15] Tray1 lower position switch (SW3)
[16] Tray1 upper position sensor (PS24)
[17] Tray1 upper position switch (SW2)
[18] FS control board (FSCB)
[19] Stapler home sensor/1 (PS18)
[20] Leading edge stopper home sensor (PS20)
[21] Alignment plate home sensor (PS17)
[22] Tray1 paper detection sensor (PS16)
[23] Saddle path sensor (PS11)
[24] Tray2 path sensor (PS6)

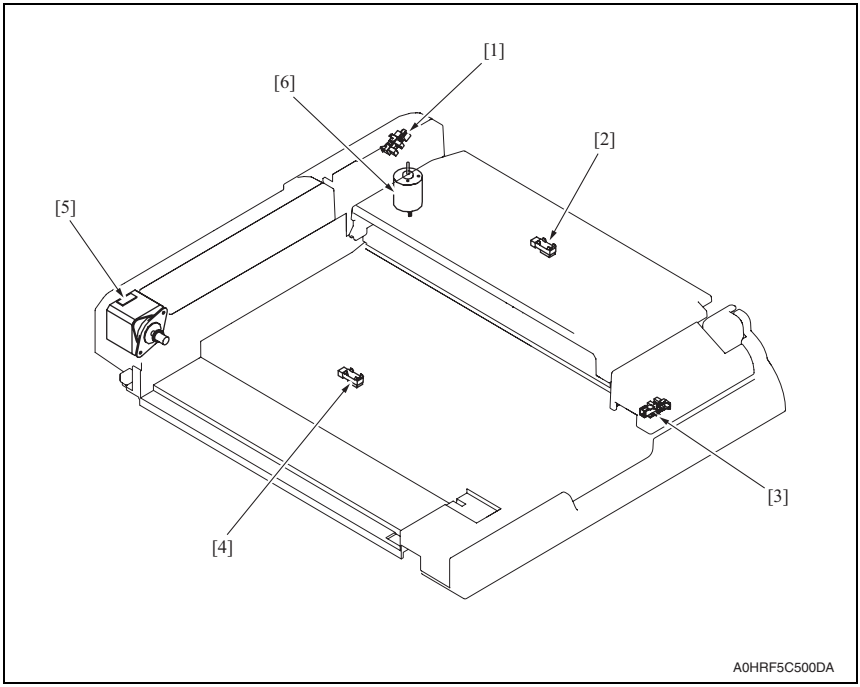

[1] Duplex path switching sensor (PS3)
[2] Paper passage sensor/1 (PS1)
[3] Horizontal conveyance cover sensor (PS5)
[4] Paper passage sensor/2 (PS2)
[5] Paper passage motor/1 (M1)
[6] Duplex path switching motor (M2)

24.15 SD-509 (Option)

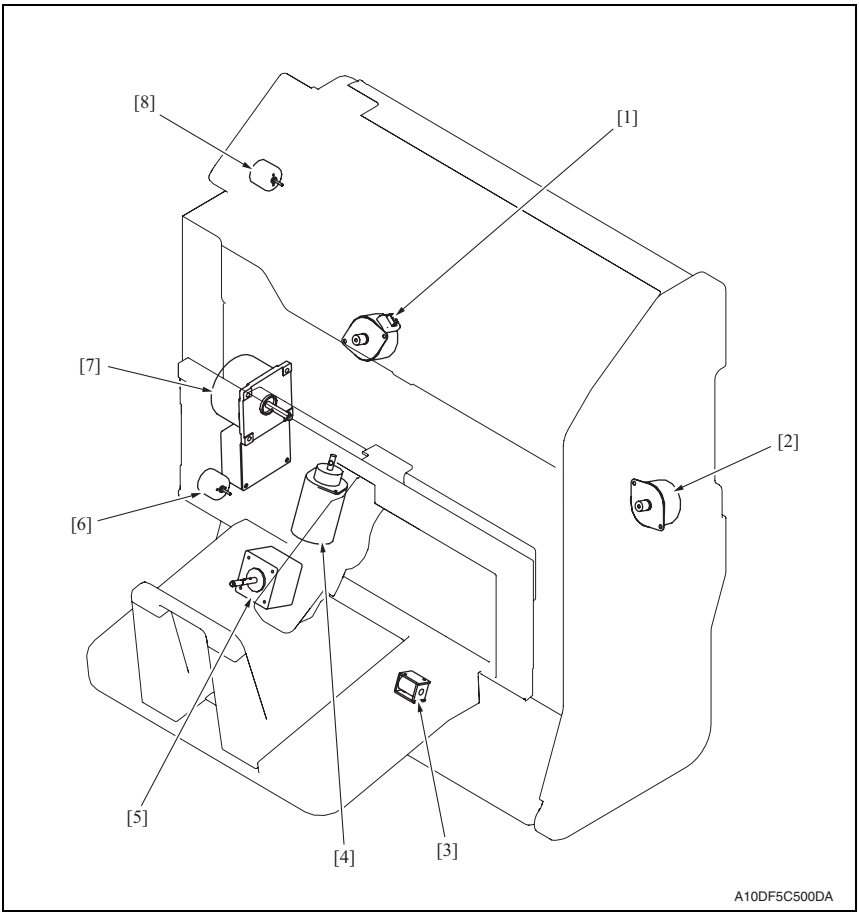

[1] Center staple alignment motor/R (M23)
[2] Center staple alignment motor/F (M24)
[3] Leading edge grip solenoid (SD3)
[4] Center fold plate motor (M26)
[5] Leading edge stopper motor (M20)
[6] Lower paddle motor (M22)
[7] Center fold roller motor (M25)
[8] Upper paddle motor (M21)

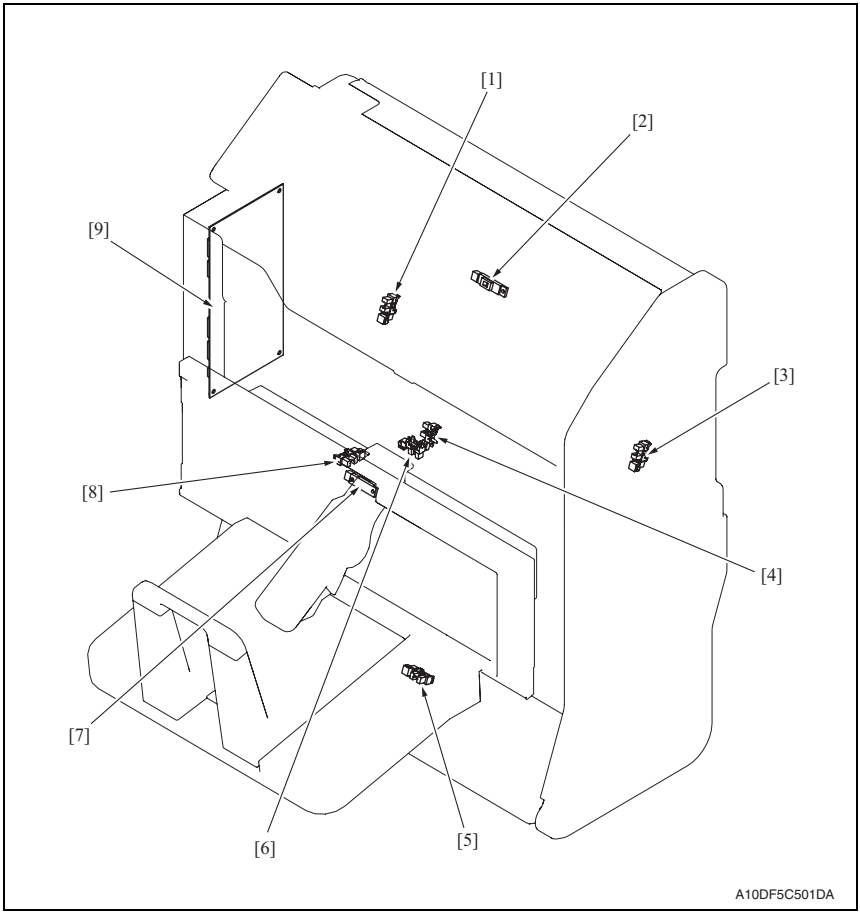

[1] Center staple alignment home sensor/R (PS41)
[2] Paper detection sensor/1 (PS43)
[3] Center staple alignment home sensor/F (PS42)
[4] Center fold plate home sensor (PS47)
[5] Leading edge stopper home sensor (PS45)
[6] Booklet tray full sensor (PS50)
[7] Paper detection sensor/2 (PS44)
[8] Booklet tray near full sensor (PS48)
[9] SD drive board (SDDB)

24.16 PK-517 (Option)

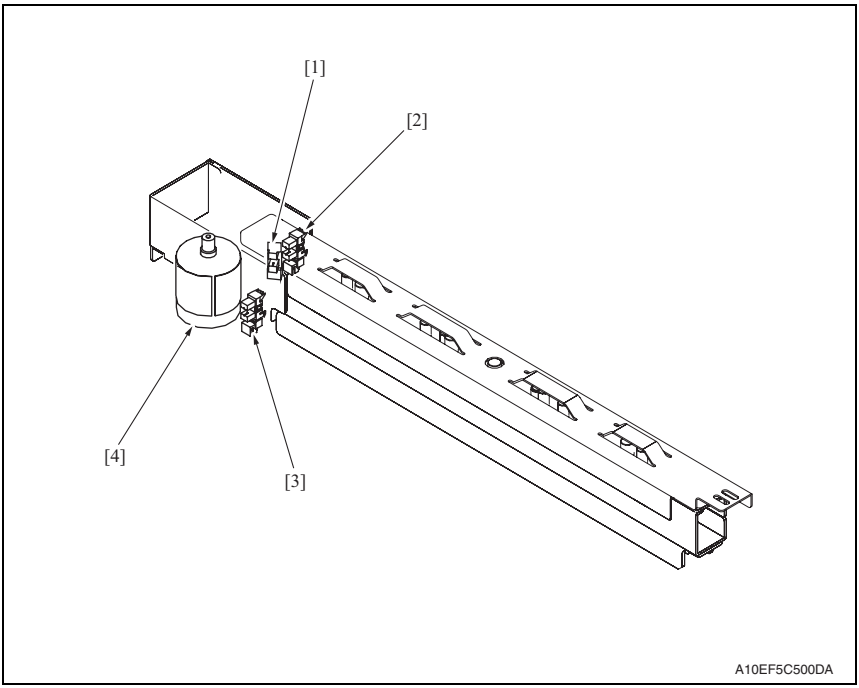

[1] Punch cam position sensor (PS200)
[2] Punch home sensor/1 (PS100)
[3] Punch pulse sensor/1 (PS300)
[4] Punch motor/1 (M100)

25. CONNECTOR LAYOUT DRAWING

25.1 Main body

25.1.1 Printer control board (PRCB)

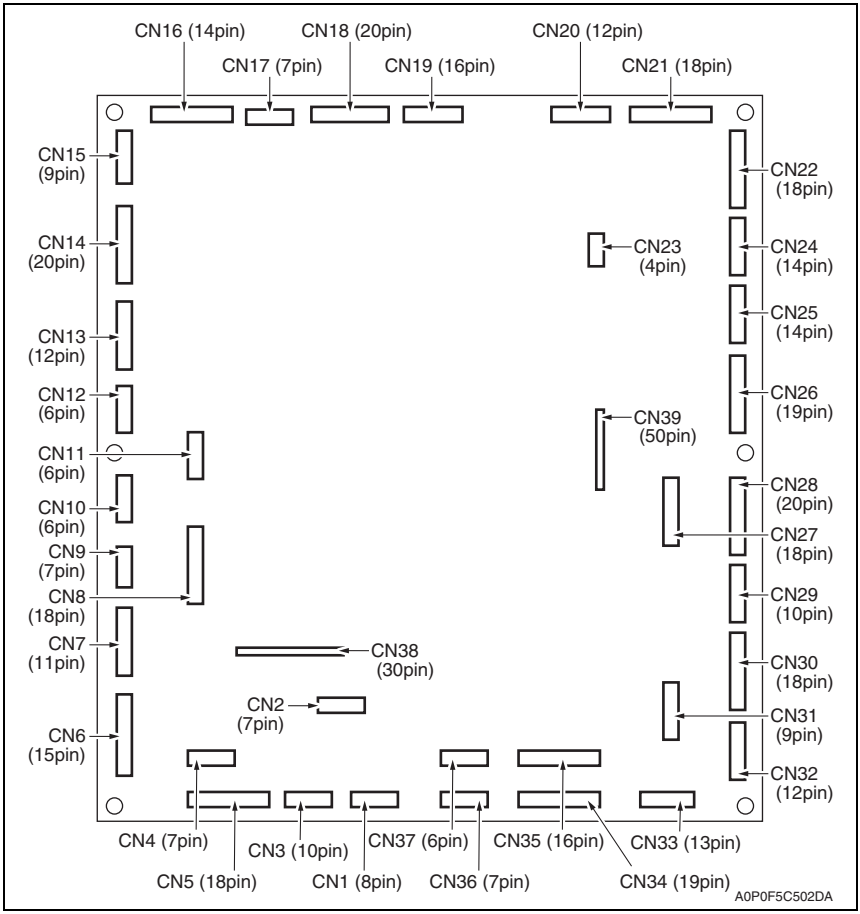

25.1.2 MFP board (MFPB)

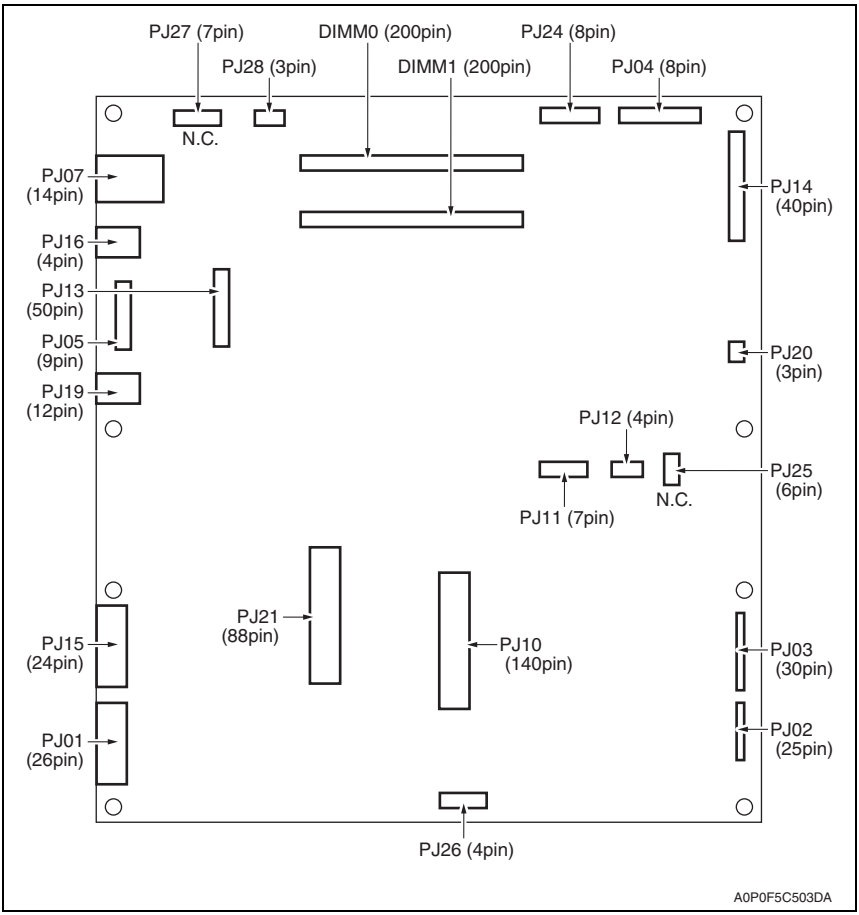

25.1.3 PCI board (PCIB)

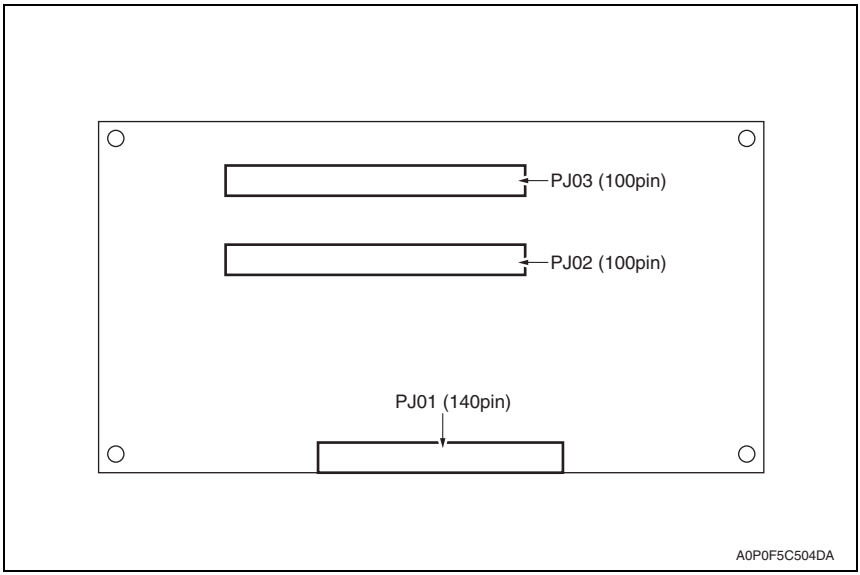

25.1.4 Paper feed/transport drive board (PFTDB)

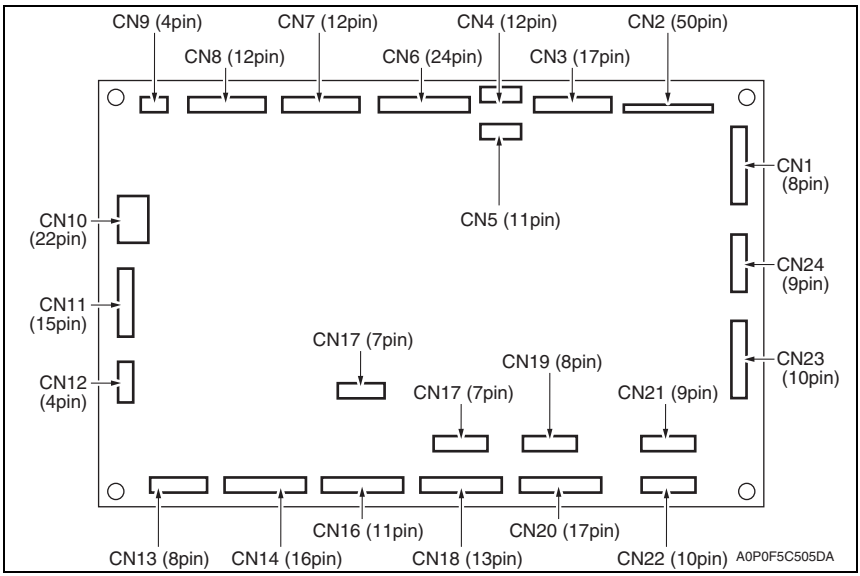

25.1.5 PH relay board (REYB/PH)

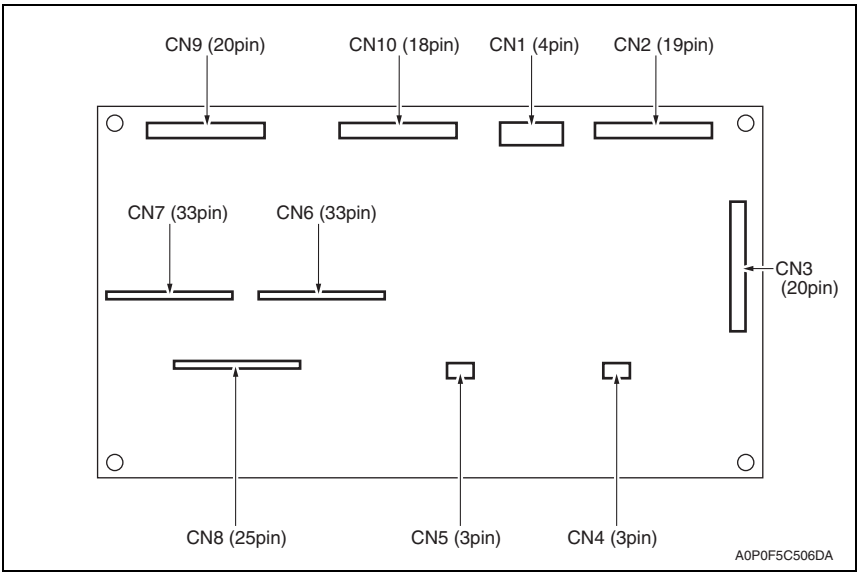

25.1.6 Scanner relay board (REYB/SCAN)

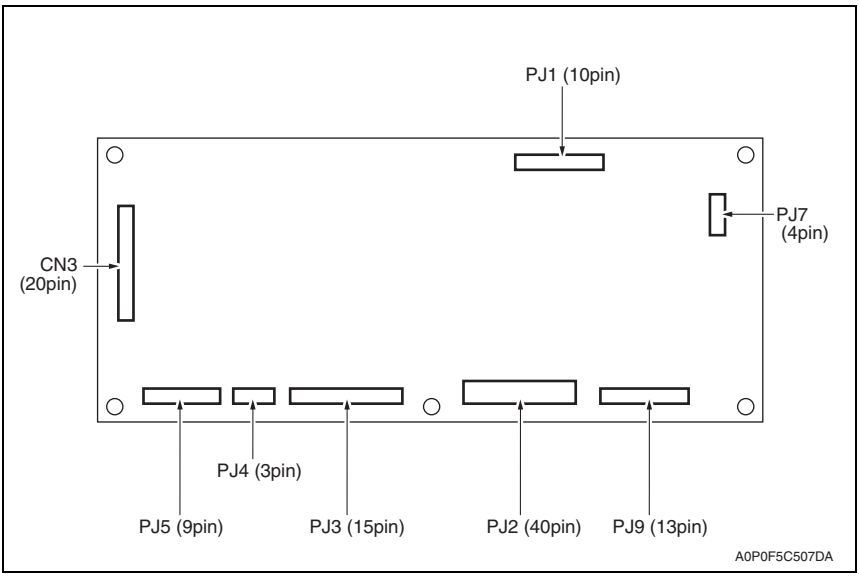

25.1.7 Original glass position control board (OGPCB)

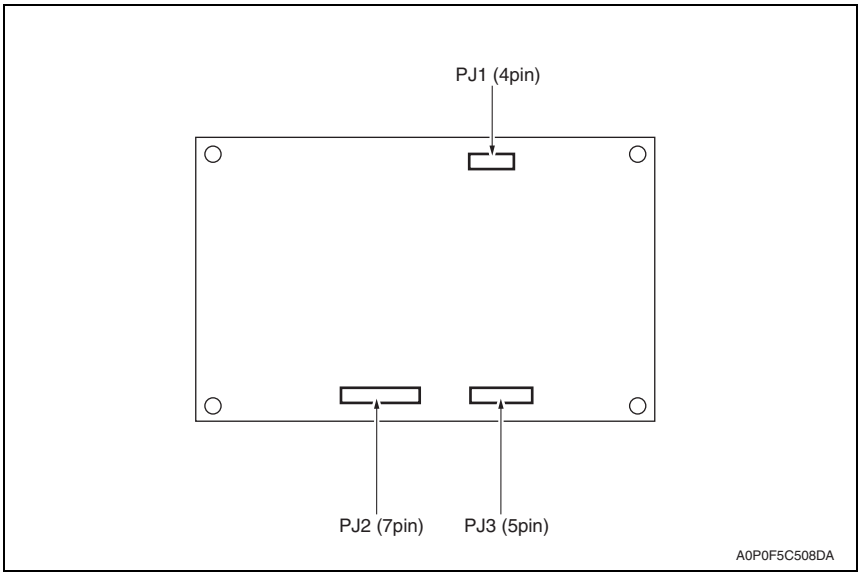

25.1.8 DF control board (DFCB)

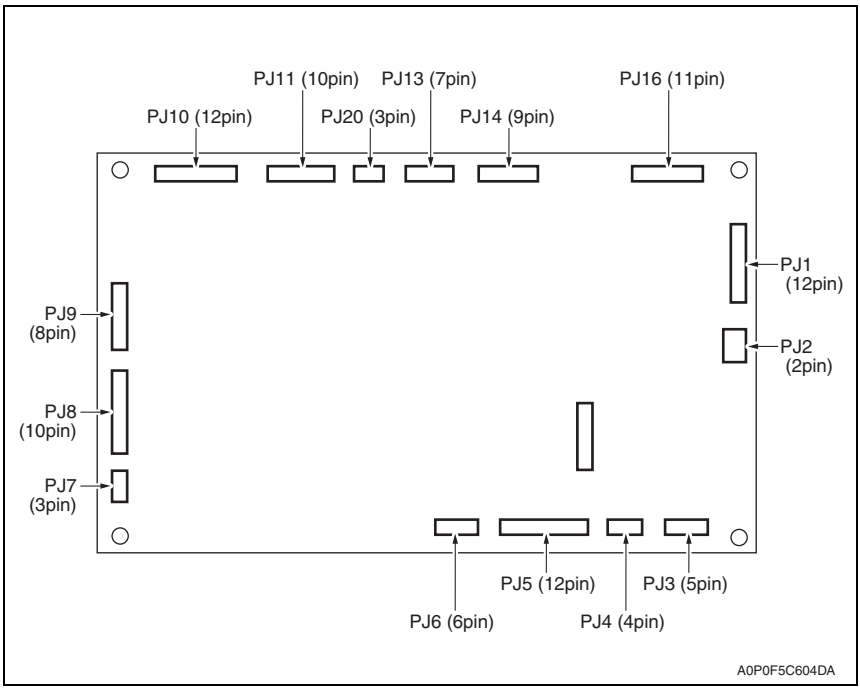

25.1.9 LU drive board (LUDB)

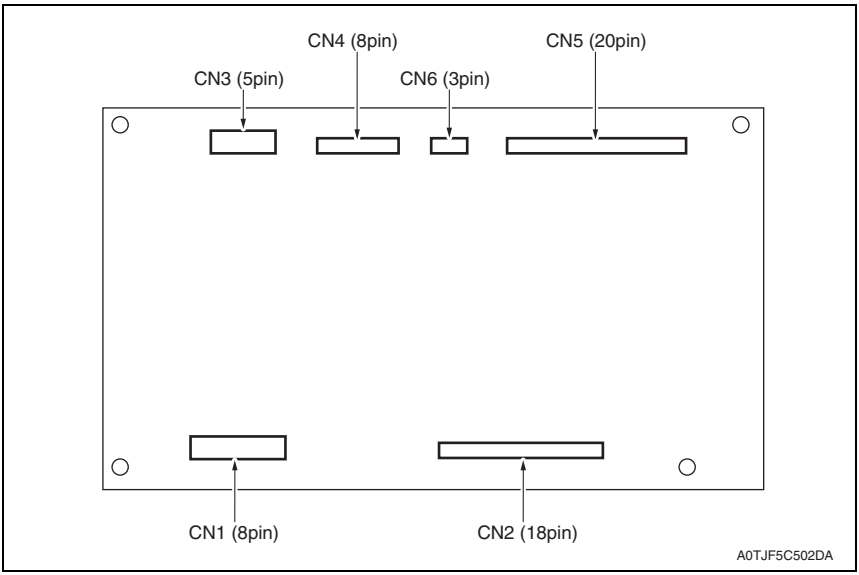

25.1.10 Punch control board (PKDB)

(1) PK-516

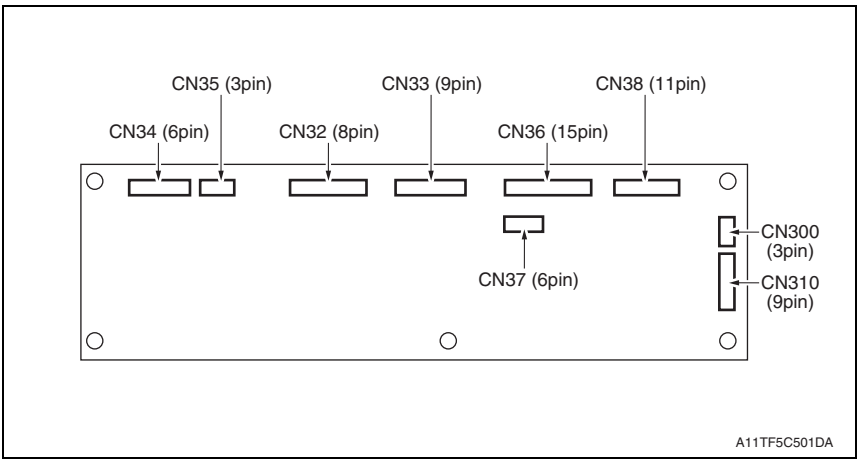

25.1.11 ZU control board

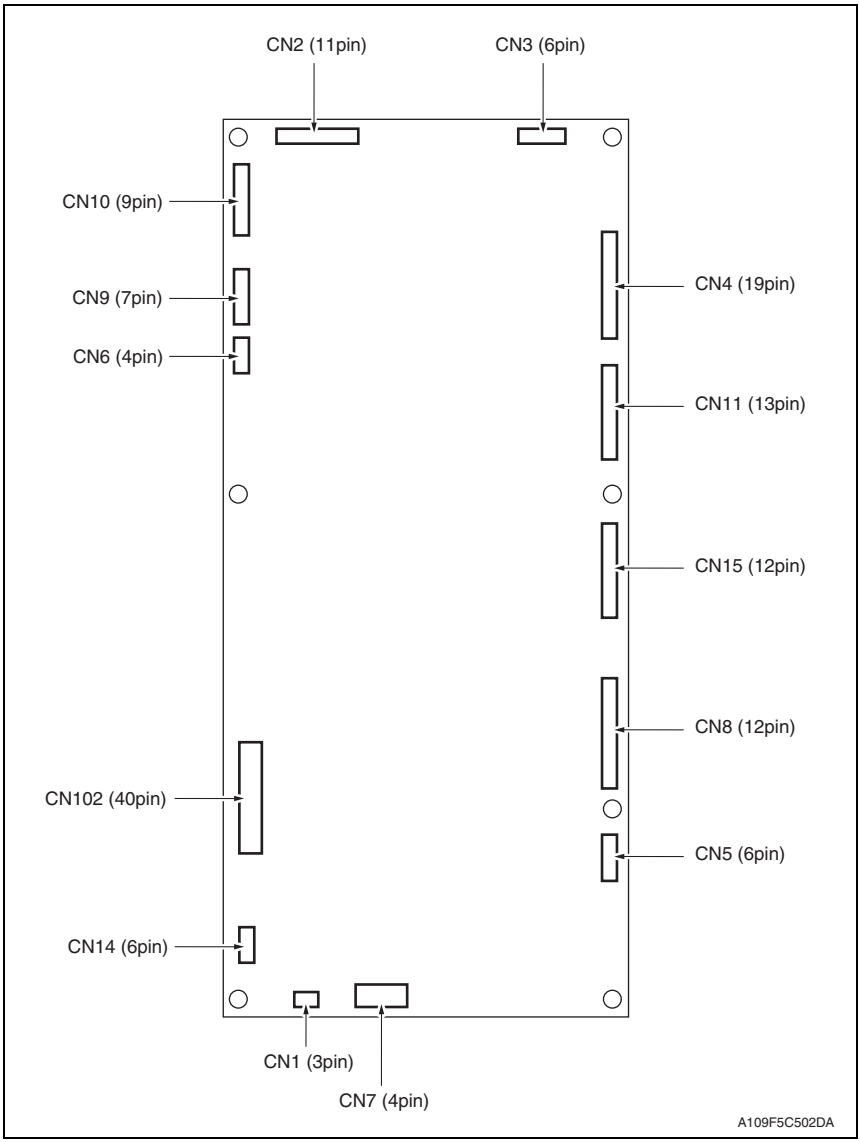

25.1.12 FS control board (FSCB)

(1) FS-526

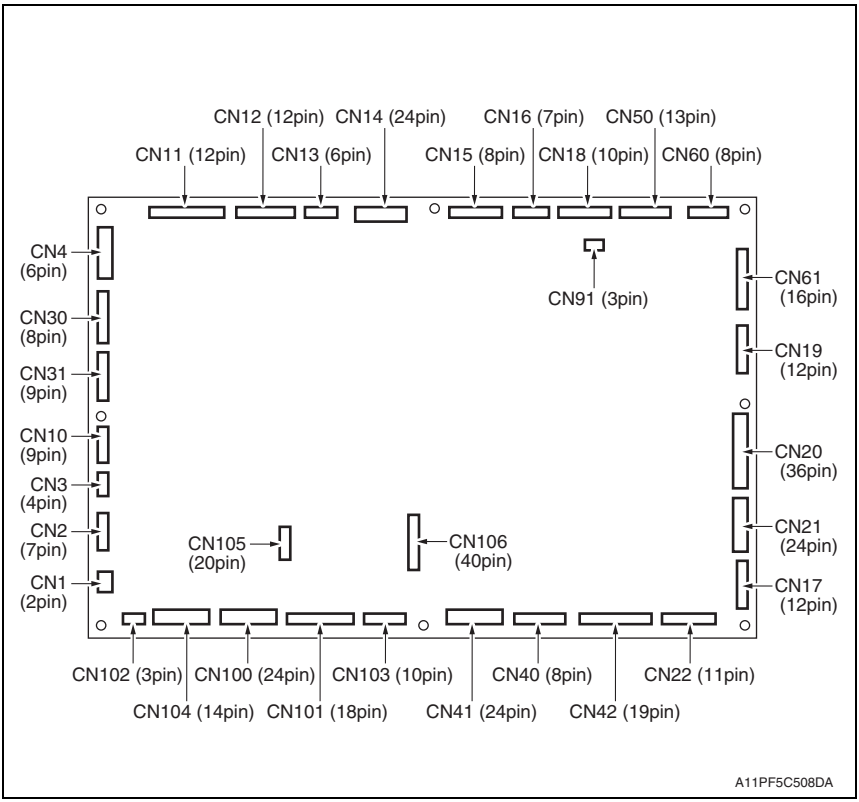

(2) FS-527

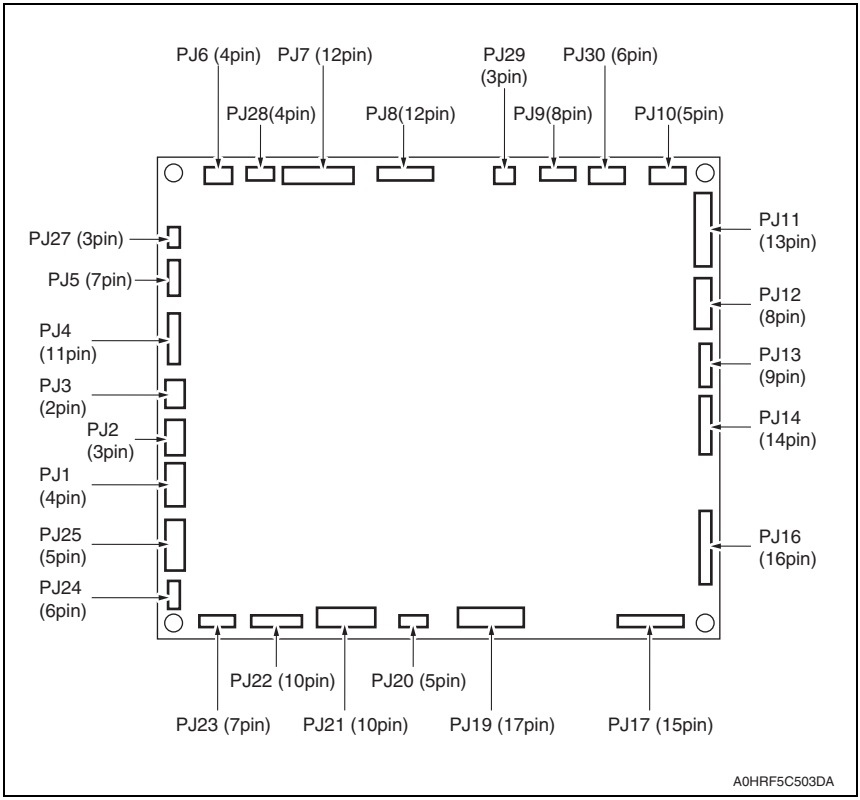

25.1.13 Interlock board (IRB)

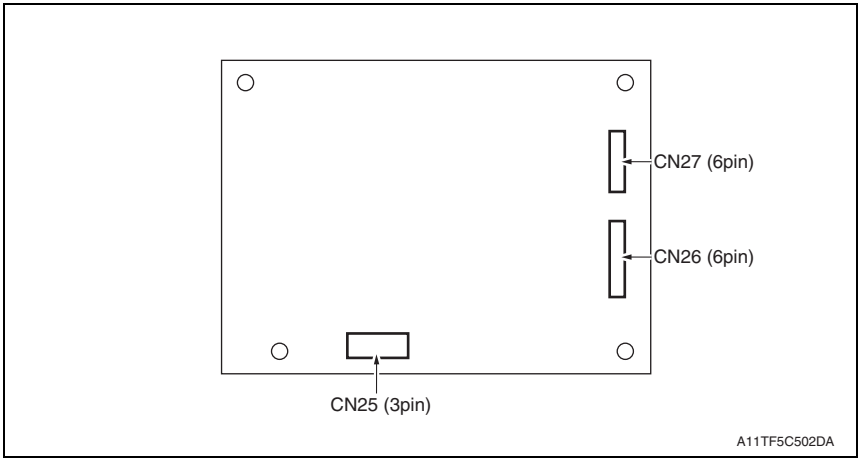

25.1.14 SD drive board (SDDB)

(1) SD-508

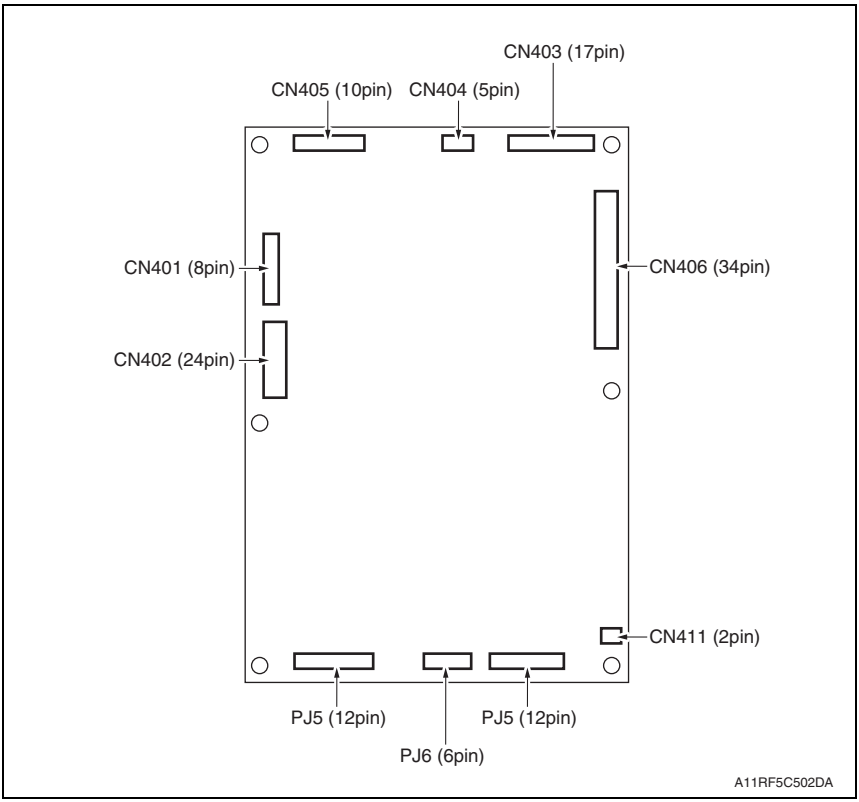

(2) SD-509

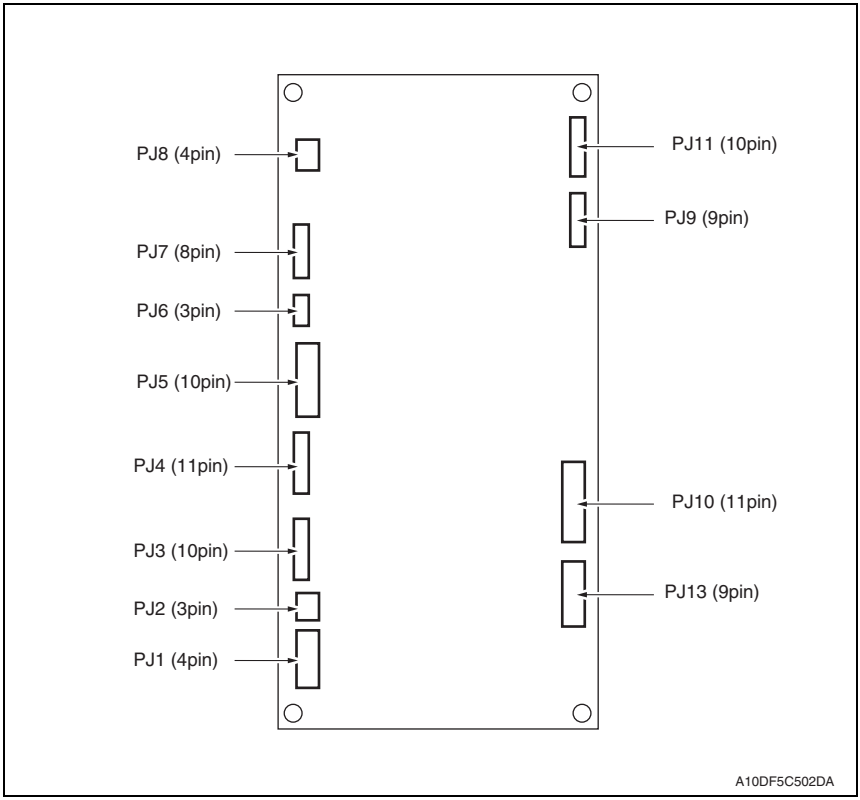

25.1.15 PI drive board

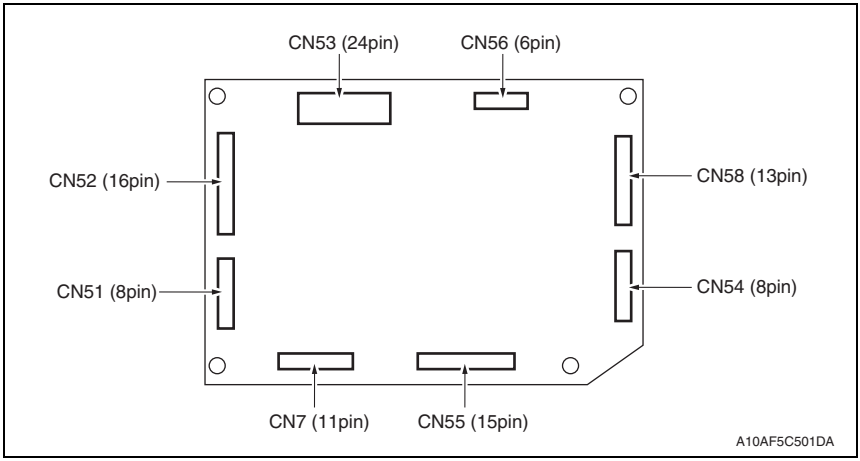

26. RELAY CONNECTOR LAYOUT DRAWING

26.1 How to read the relay connector layout drawing

Number of pin → ① Possible to confirm by removing external cover.
→ [1] Not possible to confirm by removing external cover.

26.2 Main body

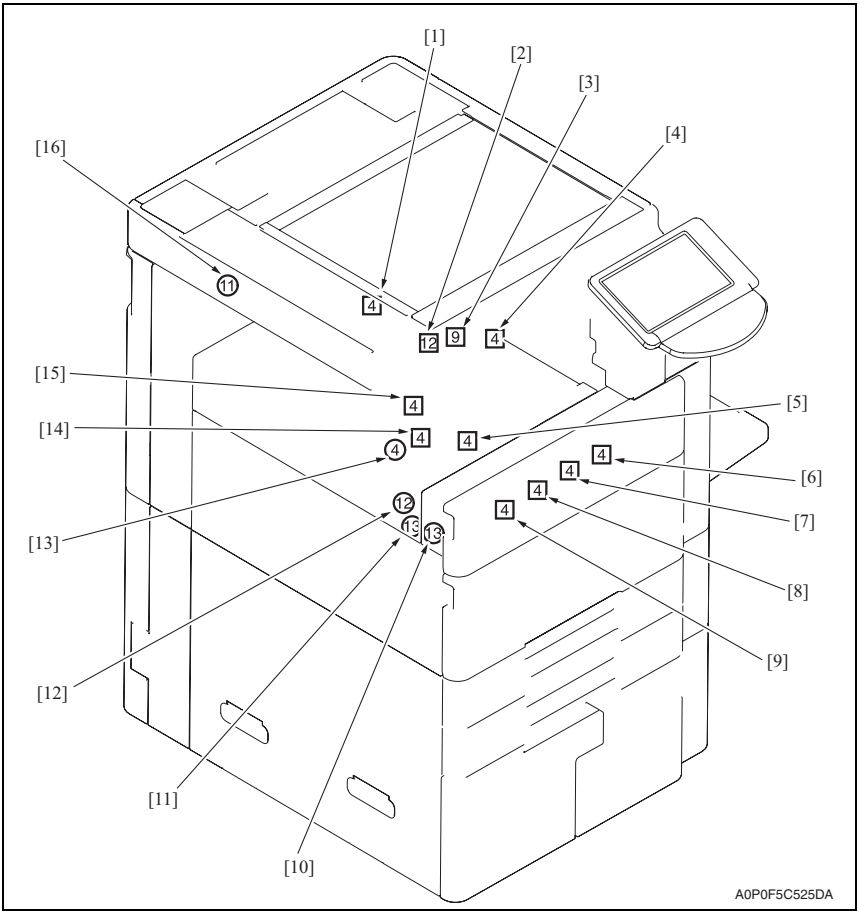

No.	CN No.	Location	No.	CN No.	Location
[1]	CN178	R-11	[9]	CN254	D-21
[2]	CN174	R-9	[10]	CN195<A>	S-10
[3]	CN180	R-10	[11]	CN195<B>	S-11
[4]	CN186	R-9	[12]	CN172	S-9 to 10

No.	CN No.	Location	No.	CN No.	Location
[5]	CN154	W-12	[13]	CN142	S-9
[6]	CN257	D-20	[14]	CN152	W-11
[7]	CN256	D-21	[15]	CN153	W-12
[8]	CN255	D-21	[16]	CN290	E-15

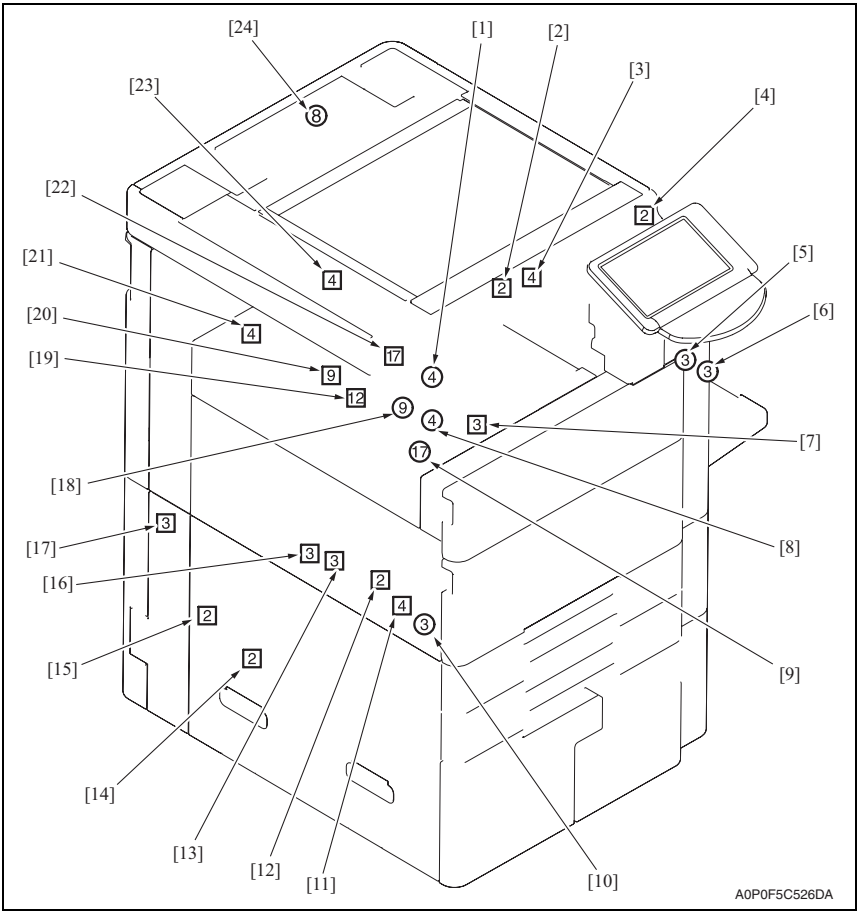

No.	CN No.	Location	No.	CN No.	Location
[1]	CN170	R-8	[13]	CN203	C-7
[2]	CN602	Q-17	[14]	CN706	W-15
[3]	CN605	Q-18	[15]	CN267	V-15
[4]	CN604	Q-17	[16]	CN707	C-6
[5]	CN289	D-15	[17]	CN333	V-15
[6]	CN293	D-16	[18]	CN334	I-5
[7]	CN322	J-7	[19]	CN330	I-6
[8]	CN171	R-8	[20]	CN306	I-4
[9]	CN198	S-7 to 8	[21]	CN320	J-6
[10]	CN202	B-7	[22]	CN166	S-7 to 8
[11]	CN386	E-1	[23]	CN321	J-6
[12]	CN385	E-1	[24]	CN381	O-27 to 28

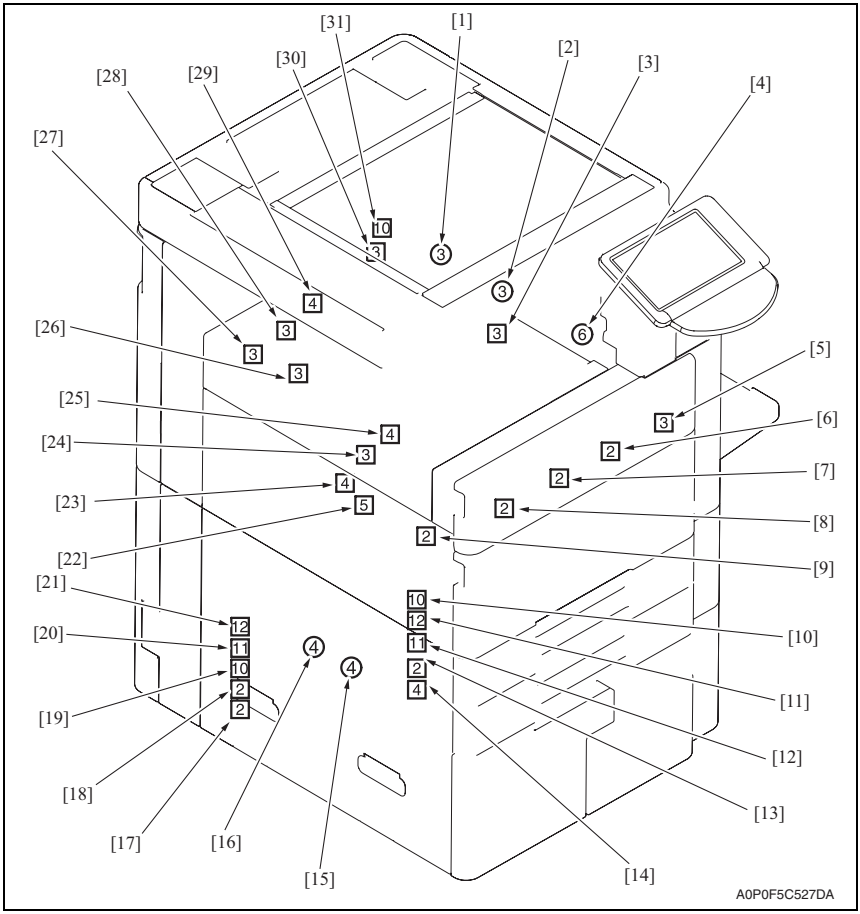

No.	CN No.	Location	No.	CN No.	Location
[1]	CN282	Q-7	[17]	CN119	W-6
[2]	CN281	Q-6	[18]	CN193	V-6
[3]	CN275	Q-5	[19]	CN113<A>	V-5
[4]	CN280	R-6 to 7	[20]	CN193	V-6
[5]	CN248	D-22	[21]	CN113<B>	V-6
[6]	CN291	D-23	[22]	CN143	V-9
[7]	CN246	D-22	[23]	CN197	W-10
[8]	CN247	D-22	[24]	CN137	W-10
[9]	CN131	W-9	[25]	CN144	W-10
[10]	CN121<A>	V-7	[26]	CN324	J-7 to 8
[11]	CN121<B>	V-8	[27]	CN326	J-8
[12]	CN194	W-7 to 8	[28]	CN325	J-7
[13]	CN123	W-7	[29]	CN323	J-7

No.	CN No.	Location	No.	CN No.	Location
[14]	CN122	W-7	[30]	CN260	D-17
[15]	CN129	W-7	[31]	CN258	E-16
[16]	CN134	W-7			

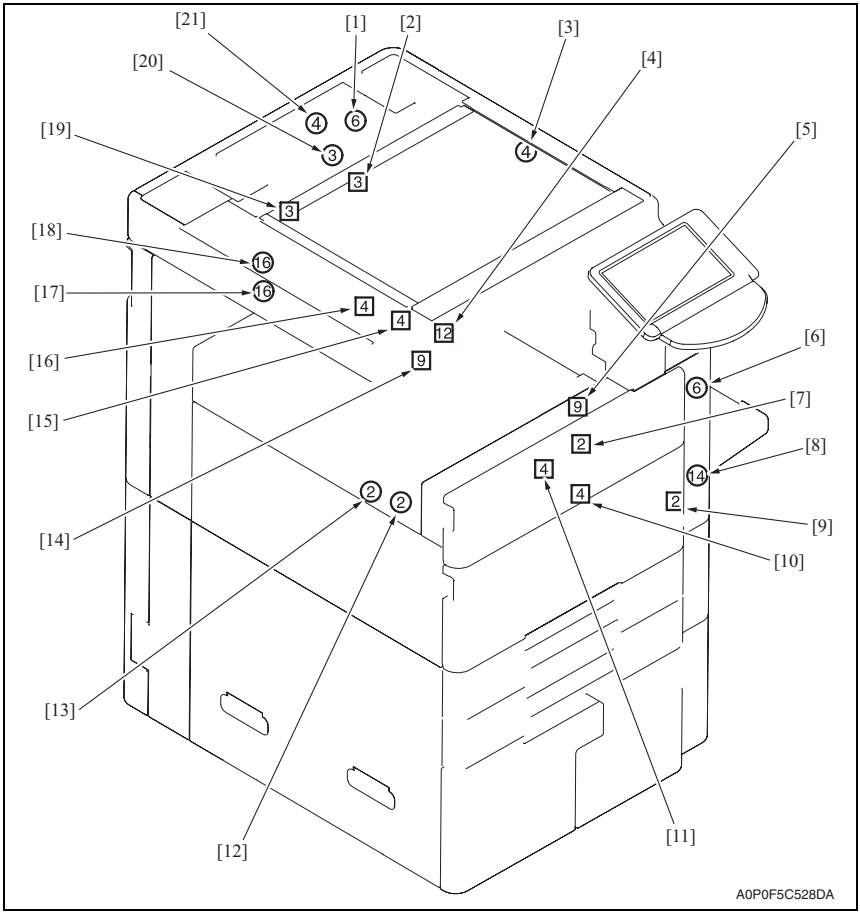

No.	CN No.	Location	No.	CN No.	Location
[1]	CN297	E-23	[12]	CN235	E-25
[2]	CN318	D-23	[13]	CN242	E-27
[3]	CN613	D-28	[14]	CN249	E-13
[4]	CN511	D-20	[15]	CN164	D-14
[5]	CN298	E-17	[16]	CN163	D-14
[6]	CN241	E-24	[17]	CN253<A>	E-22
[7]	CN165	D-13	[18]	CN253<B>	E-21
[8]	CN228	E-24 to 25	[19]	CN316	D-23
[9]	CN702	D-19	[20]	CN328	D-12
[10]	CN287	E-18	[21]	CN383	E-28
[11]	CN378	D-13			

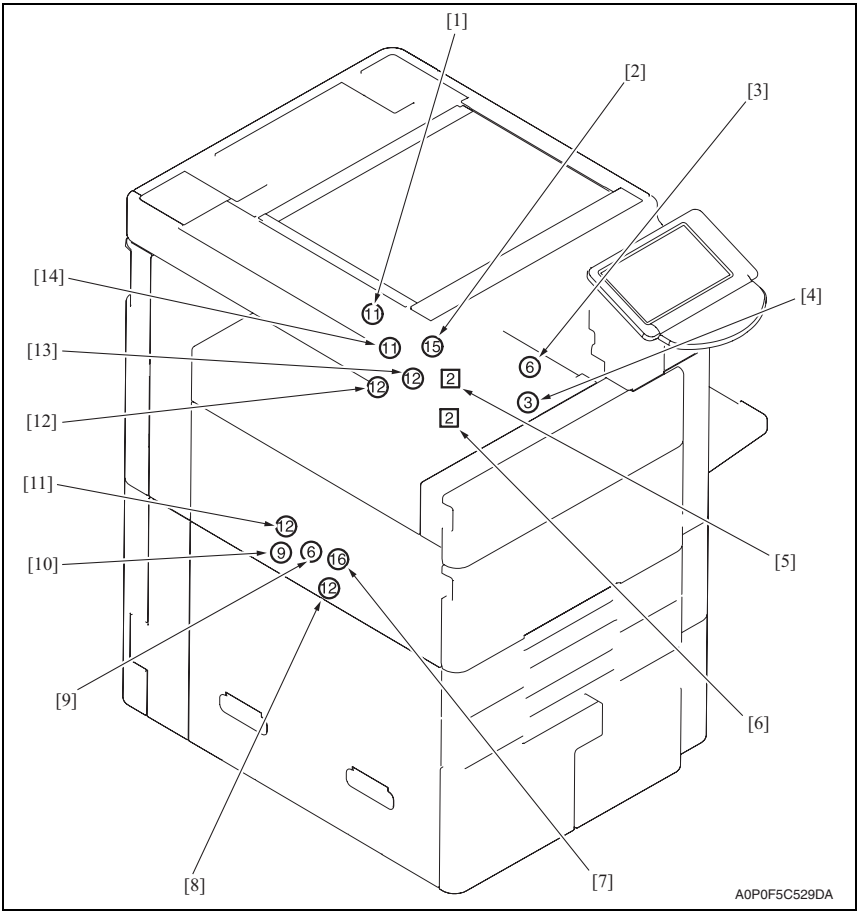

No.	CN No.	Location	No.	CN No.	Location
[1]	CN155<A>	S-3	[8]	CN395	E-10
[2]	CN145	S-2	[9]	CN392	E-7
[3]	CN279	R-6 to 7	[10]	CN394	E-9
[4]	CN278	Q-6	[11]	CN700	E-8
[5]	CN151	Q-2	[12]	CN271<A>	S-5
[6]	CN156	Q-3	[13]	CN271<B>	S-6 to 7
[7]	CN217	E-11	[14]	CN155<B>	S-4

27. TIMING CHART

27.1 Main body

27.1.1 Timing chart in color mode

A. Operating conditions

- Color mode/A4 or 8 $^1/_2$ x 11/tray1

B. Timing chart

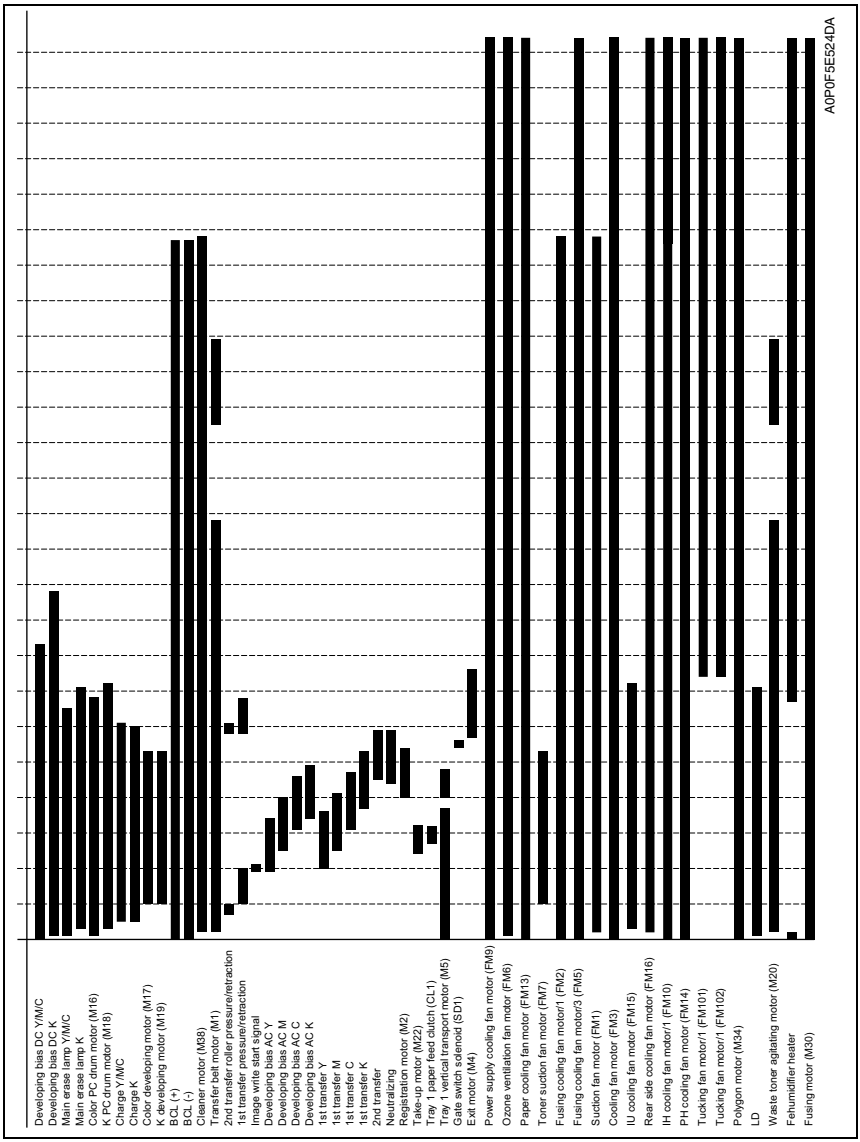

27.2 DF-618

27.2.1 1-sided mode

A. Operating conditions

- Color mode/A4 or 8 $^{1}/_{2}$ x 11/full size/2 originals

B. Timing chart

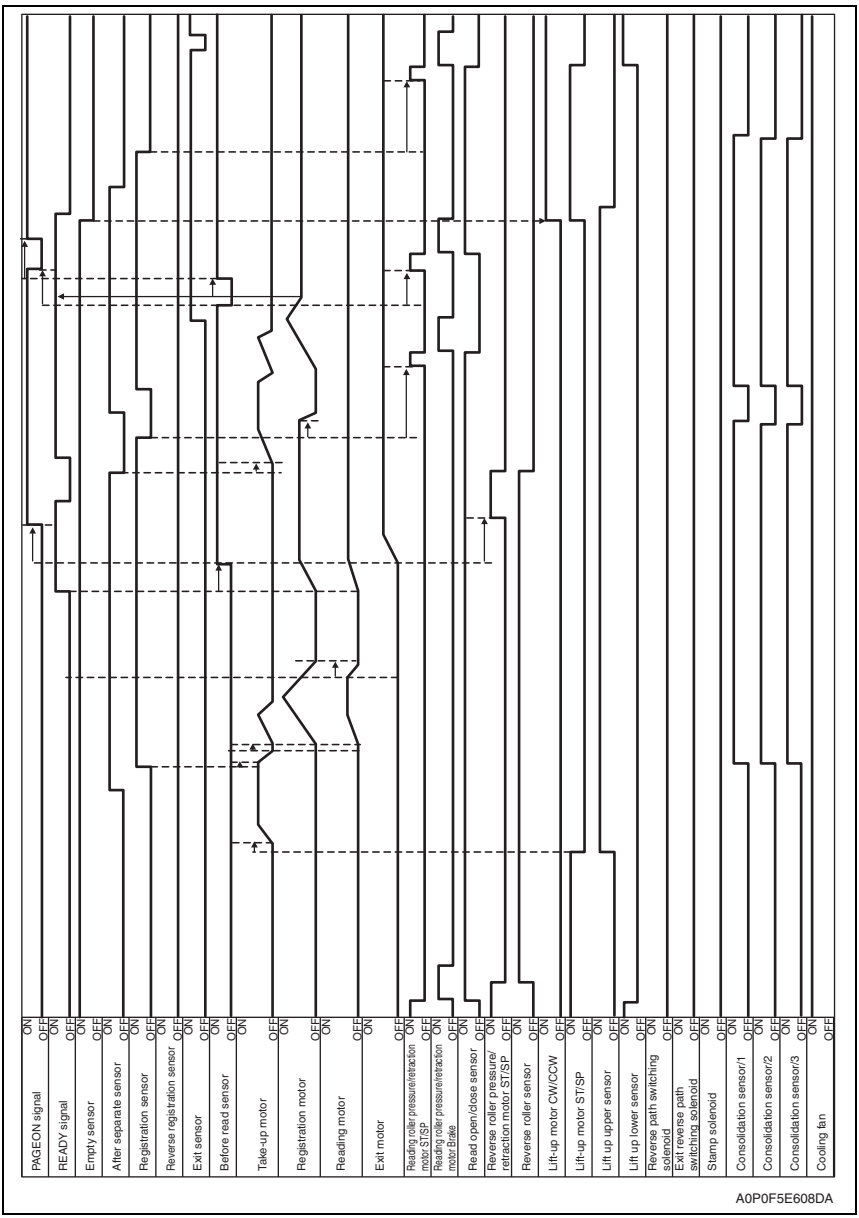

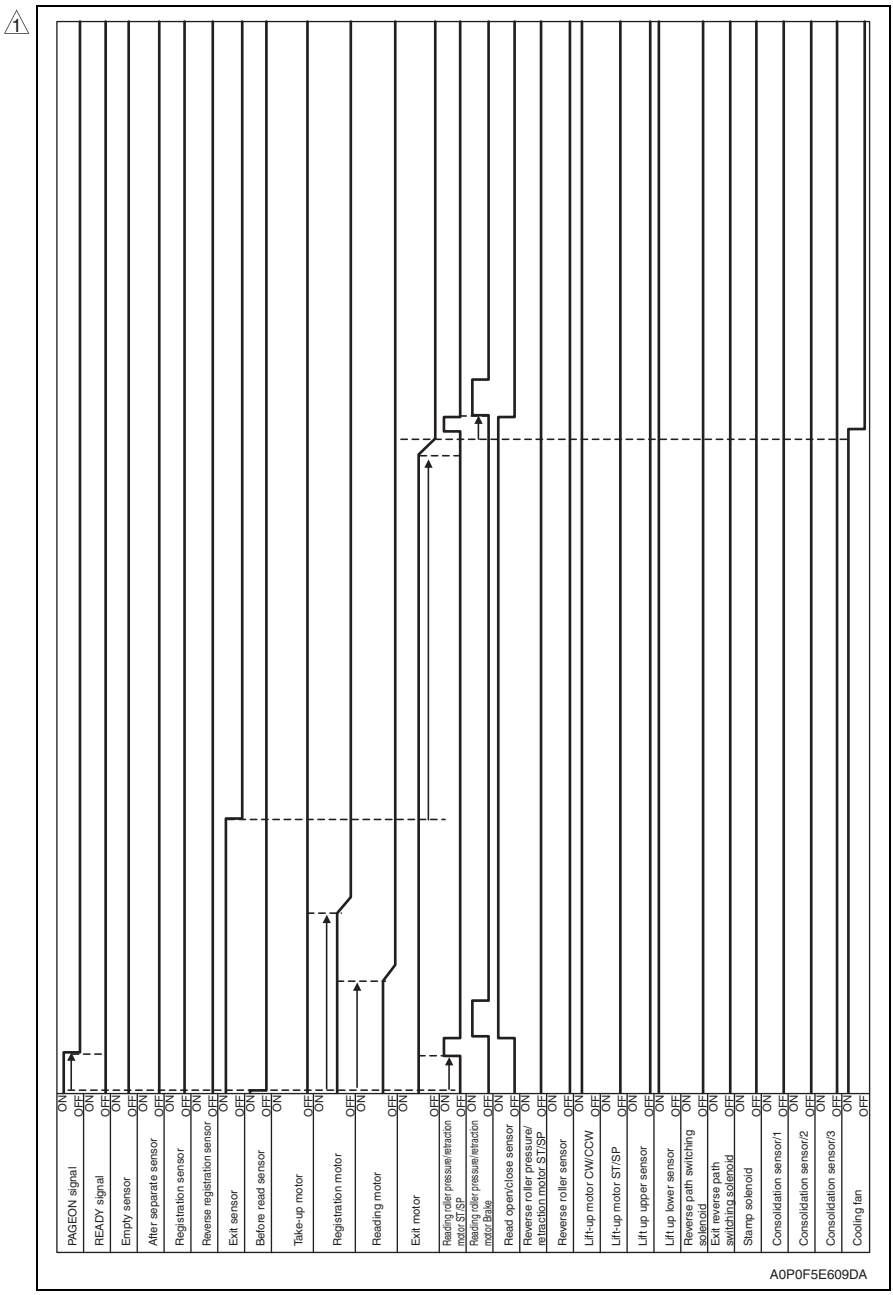
PAGEON signal
READY signal
Empty sensor
After separate sensor
Registation sensor
Reverse registation sensor
Exit sensor
Before read sensor
Take-up motor
Registation motor
Reading motor
Exit motor
Reading roller pressure/retraction motor ST/SP
Reading roller pressure/retraction motor brake
Read open/close sensor
Reverse roller pressure/retraction motor ST/SP
Reverse roller sensor
Lift-up motor CW/CCW
Lift-up motor ST/SP
Lift up upper sensor
Lift up lower sensor
Reverse path switching solenoid
Exit reverse path switching solenoid
Stamp solenoid
Consolidation sensor/1
Consolidation sensor/2
Consolidation sensor/3
Cooling fan
ON
OFF
A0P0F5E609DA

27.2.2 2-sided mode

A. Operating conditions

- Color mode/A4 or 8 $^{1}/_{2}$ x 11/full size/2 originals

B. Timing chart

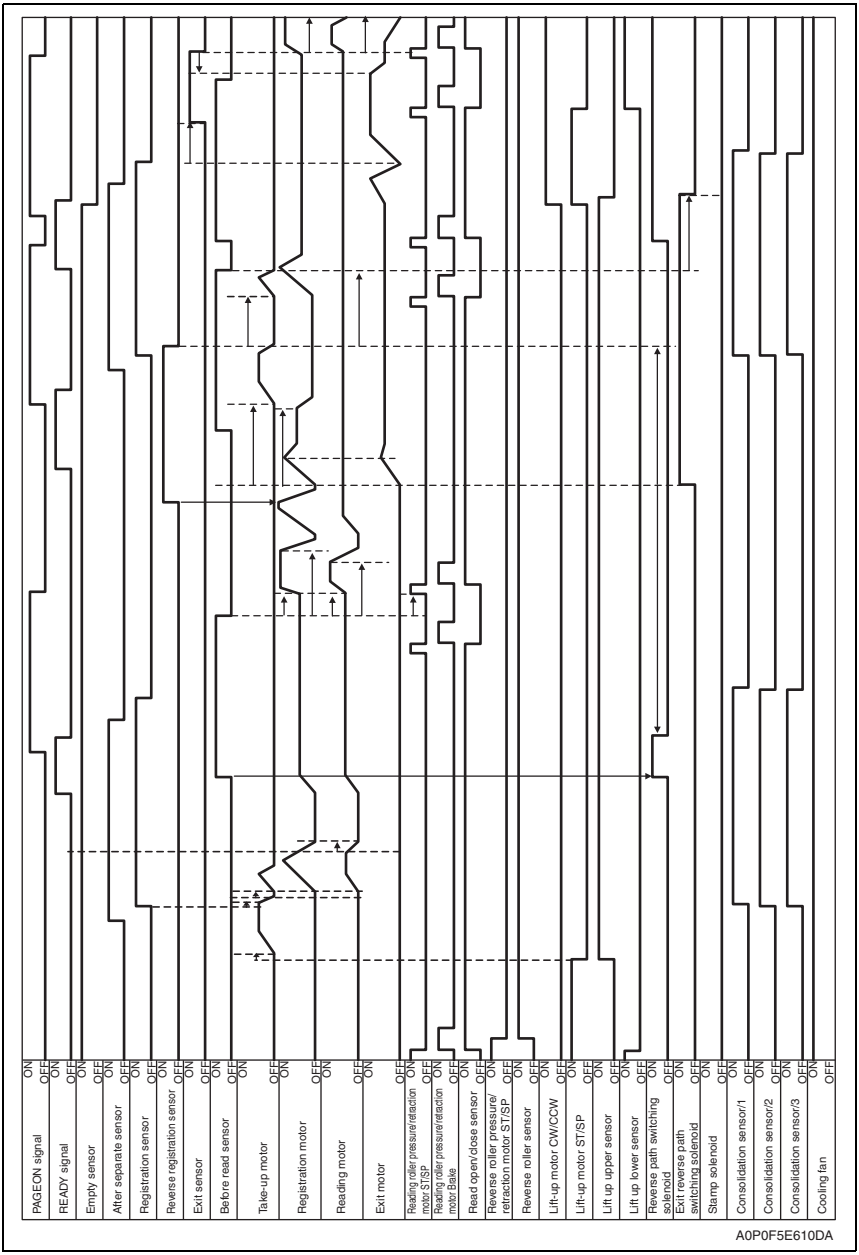

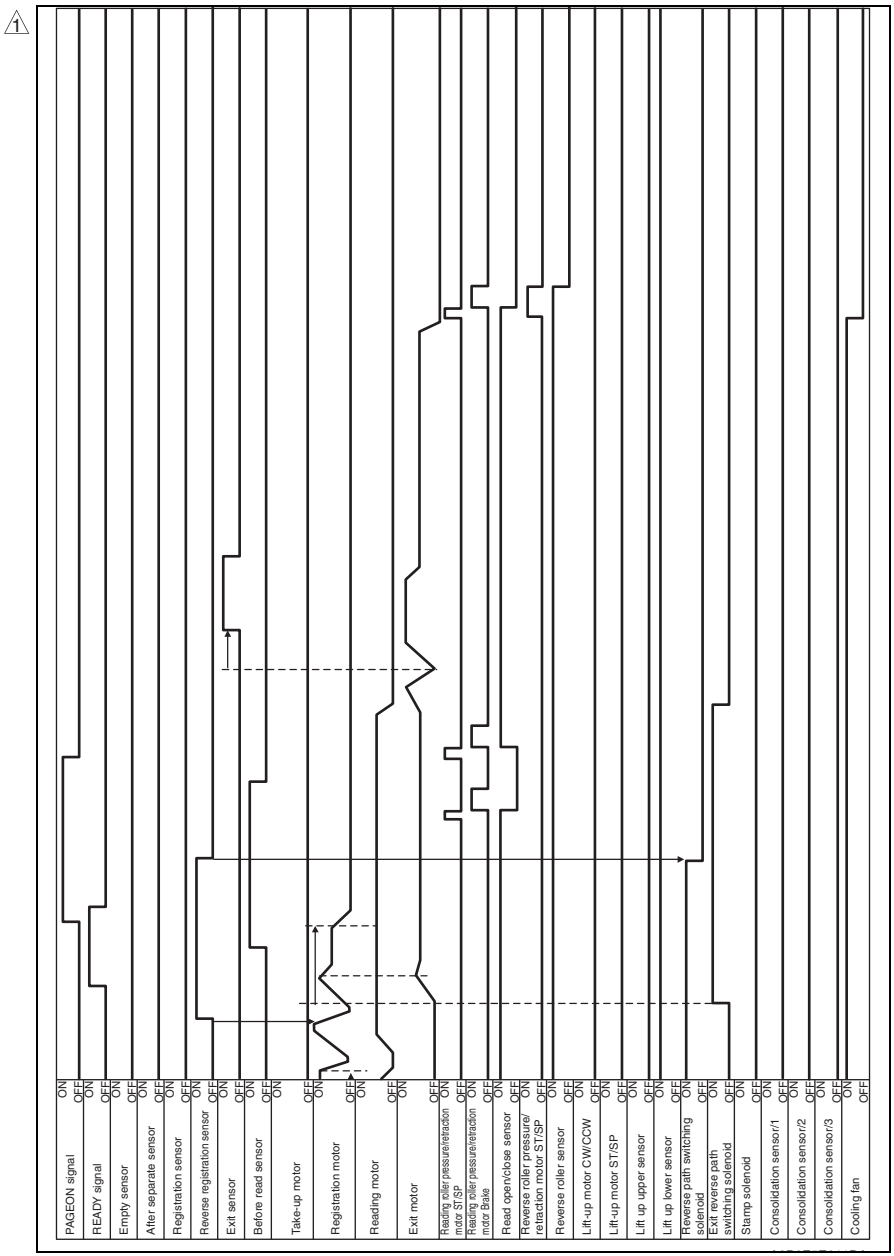
PAGEON signal
READY signal
Empty sensor
After separate sensor
Registration sensor
Reverse registration sensor
Exit sensor
Before read sensor
Take-up motor
Registration motor
Reading motor
Exit motor
Reading roller pressure/retraction motor ST/SP
Reading roller pressure/retraction motor Brake
Read open/close sensor
Reverse roller pressure/ retraction motor ST/SP
Reverse roller sensor
Lift-up motor CW/CCW
Lift-up motor ST/SP
Lift up upper sensor
Lift up lower sensor
Reverse path switching solenoid
Exit reverse path switching solenoid
Stamp solenoid
Consoldation sensor/1
Consoldation sensor/2
Consoldation sensor/3
Cooling fan
ON
OFF

27.3 LU-204

A. Operating conditions

- Color mode/A4 or 8 $^1/_2$ x 11/full size

B. Timing chart

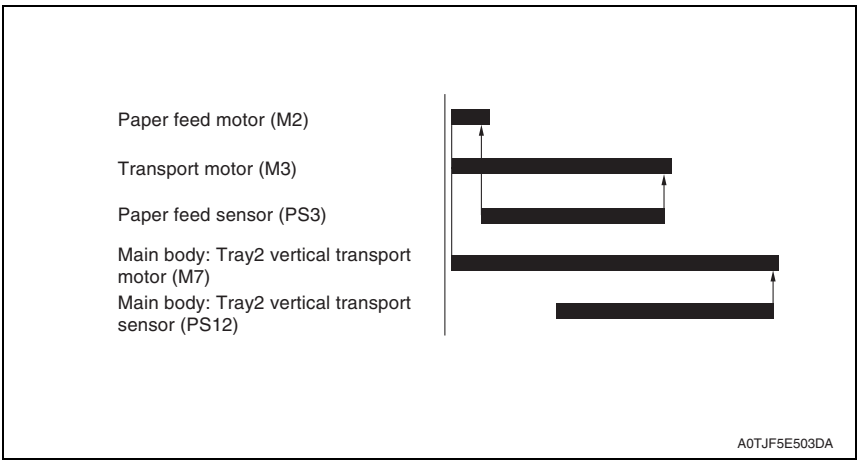

27.4 FS-526/SD-508

27.4.1 Straight paper exit mode

A. Operating conditions

- Non-sort/Color mode/A4 or 8 $^{1}/_{2}$ x 11/1-side

B. Timing chart

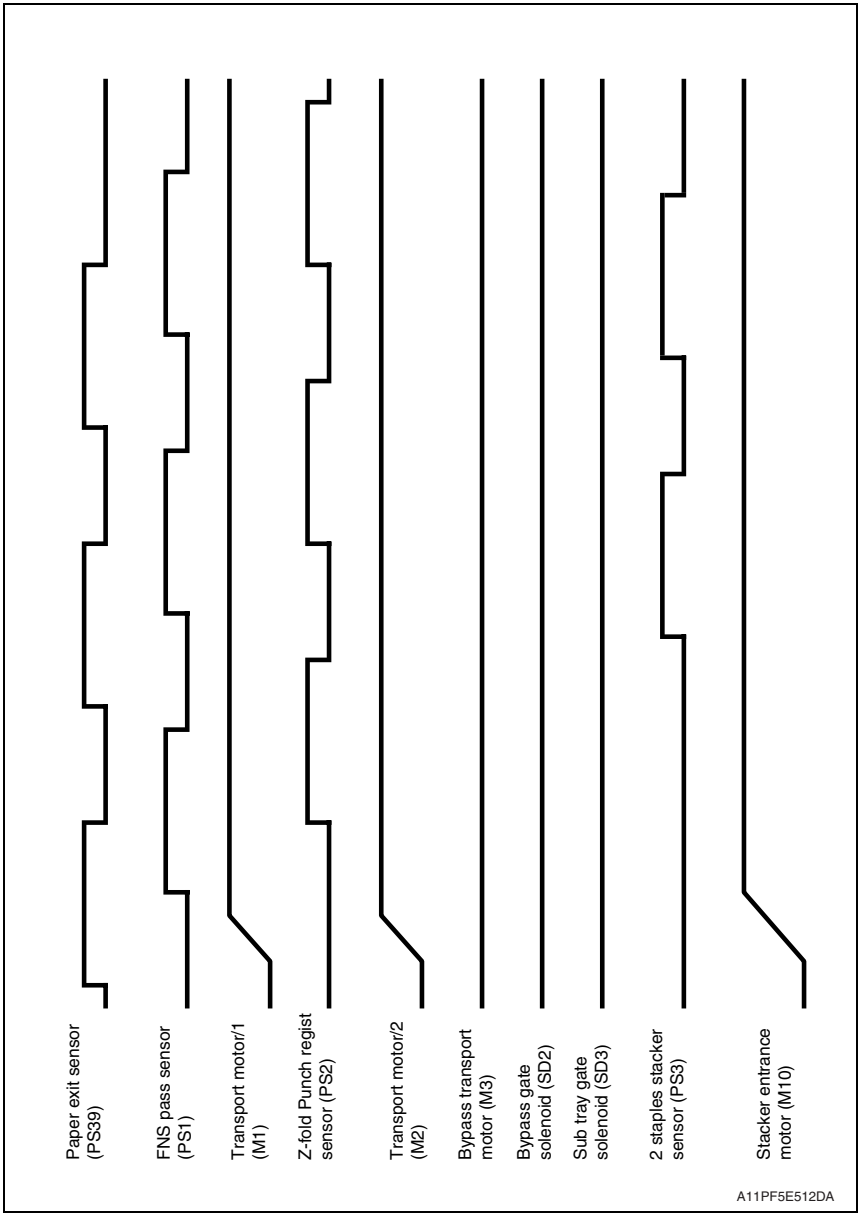

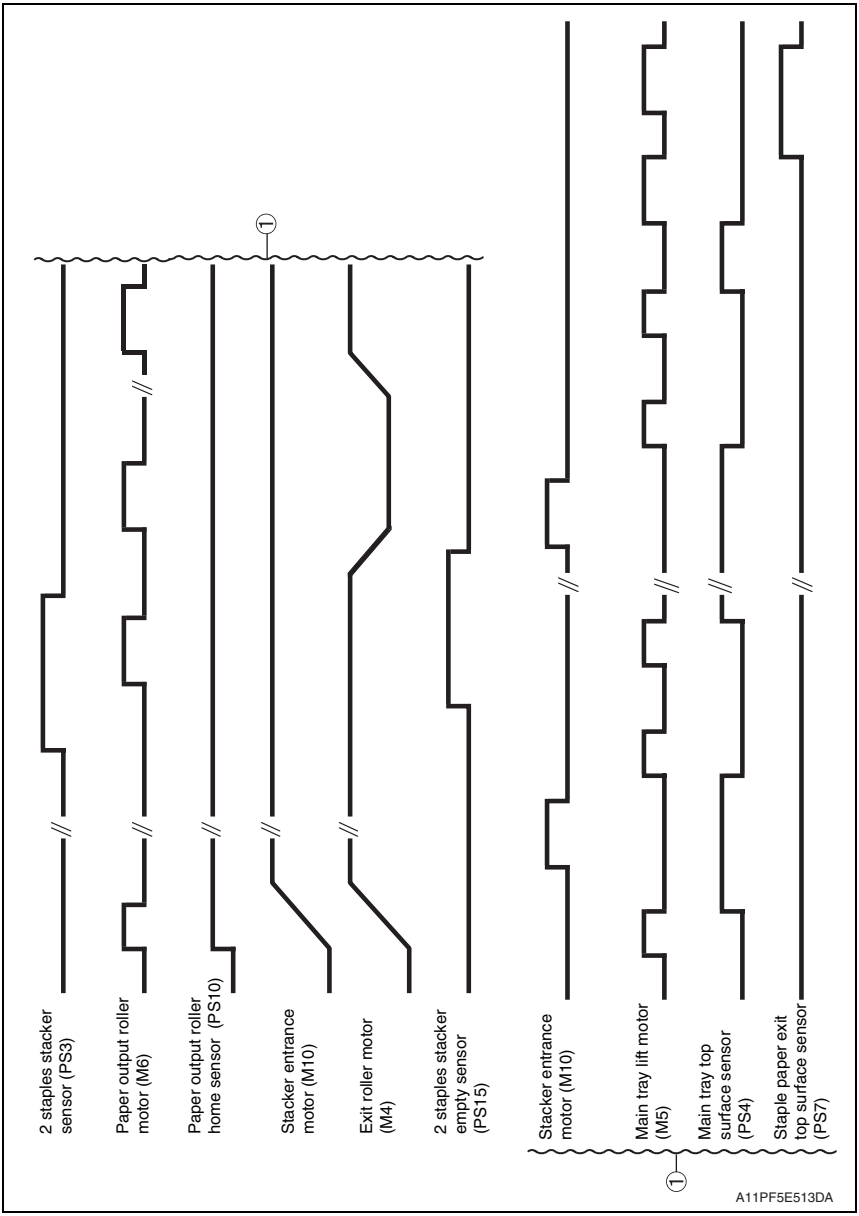
2 staples stacker sensor (PS3)
Paper output roller motor (M6)
Paper output roller home sensor (PS10)
Stacker entrance motor (M10)
Exit roller motor (M4)
2 staples stacker empty sensor (PS15)
Stacker entrance motor (M10)
Main tray lift motor (M5)
Main tray top surface sensor (PS4)
Staple paper exit top surface sensor (PS7)
1
1
A11PF5E513DA

27.4.2 2 flat stitching staples mode

A. Operating conditions

- Color mode/A4 or 8 $^1/_2$ x 11/1-side

B. Timing chart

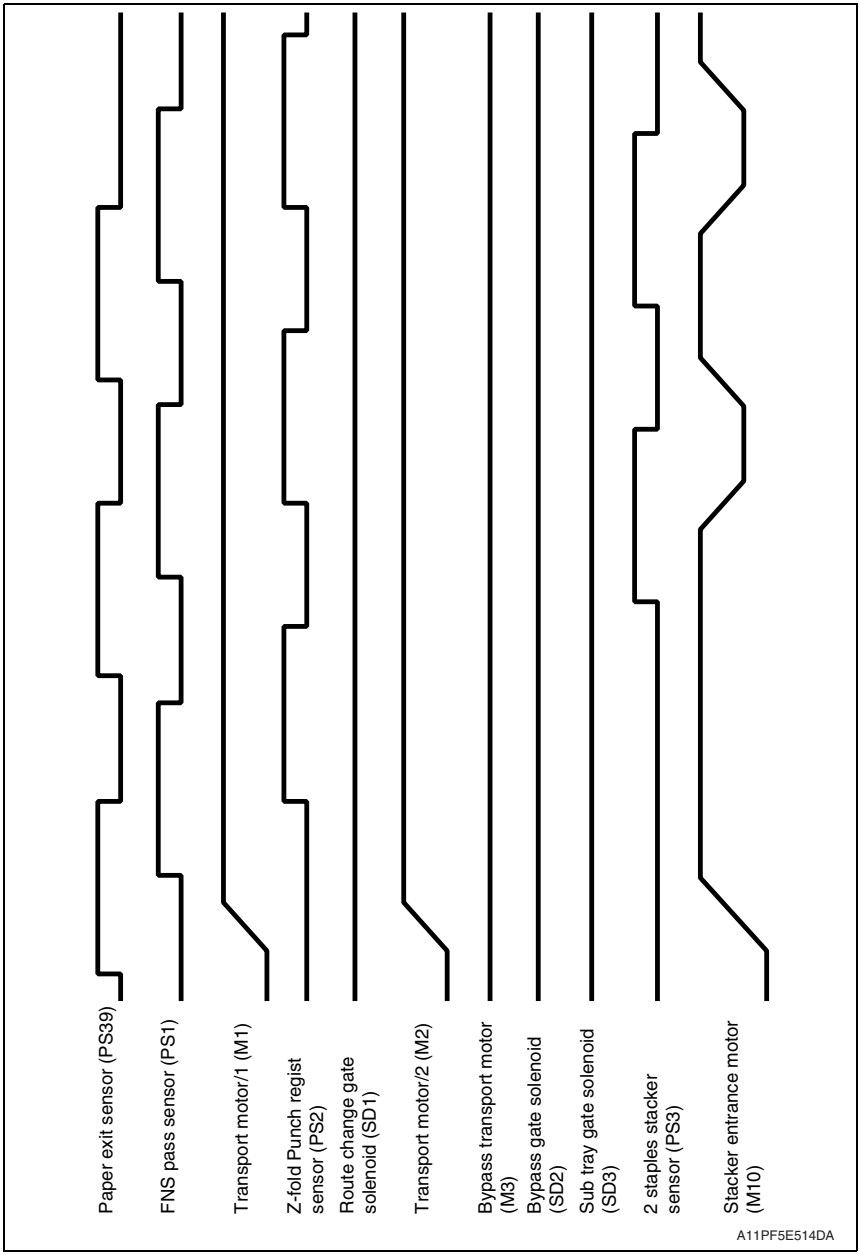

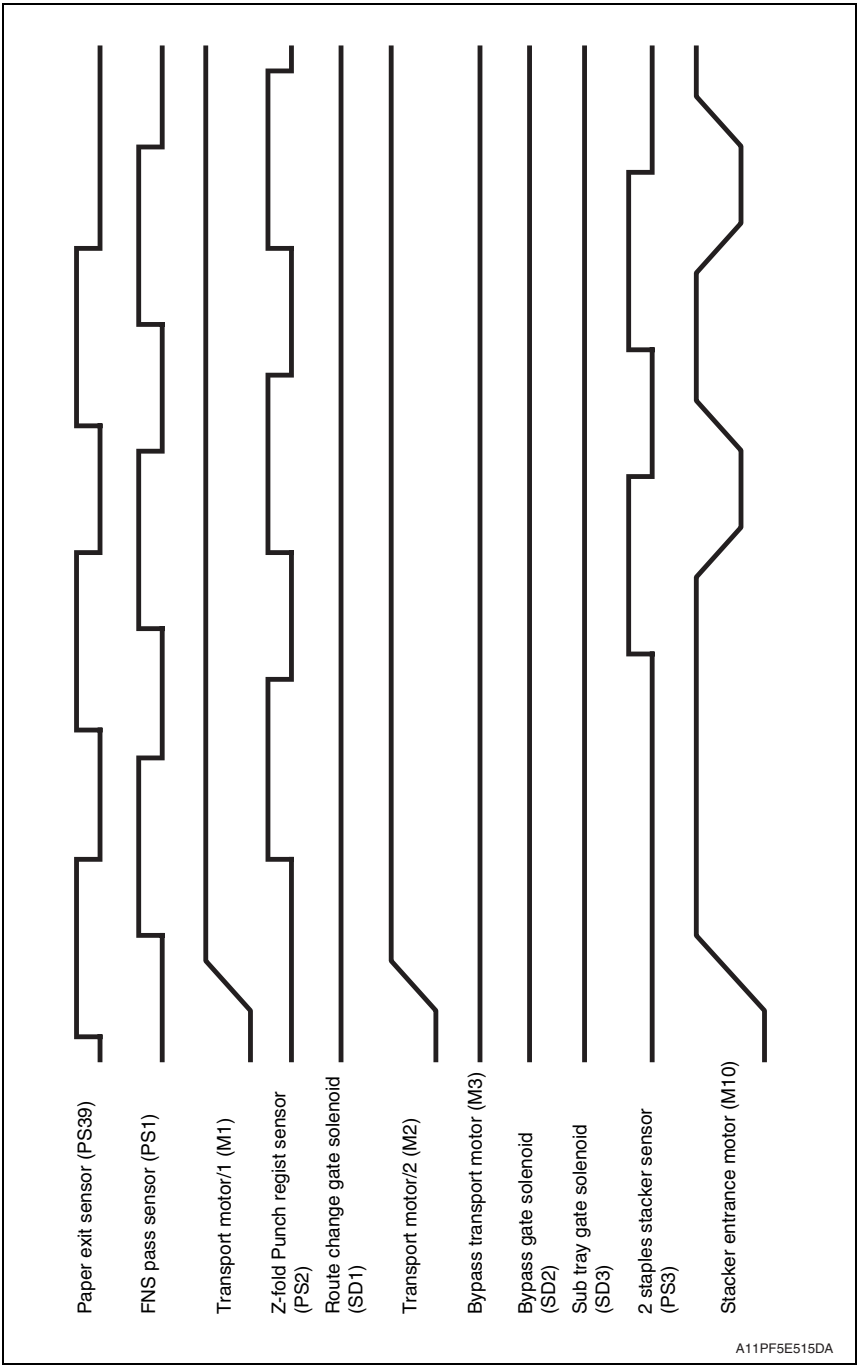
Paper exit sensor (PS39)
FNS pass sensor (PS1)
Transport motor/1 (M1)
Z-fold Punch regist sensor (PS2)
Route change gate solenoid (SD1)
Transport motor/2 (M2)
Bypass transport motor (M3)
Bypass gate solenoid (SD2)
Sub tray gate solenoid (SD3)
2 staples stacker sensor (PS3)
Stacker entrance motor (M10)
A11PF5E515DA

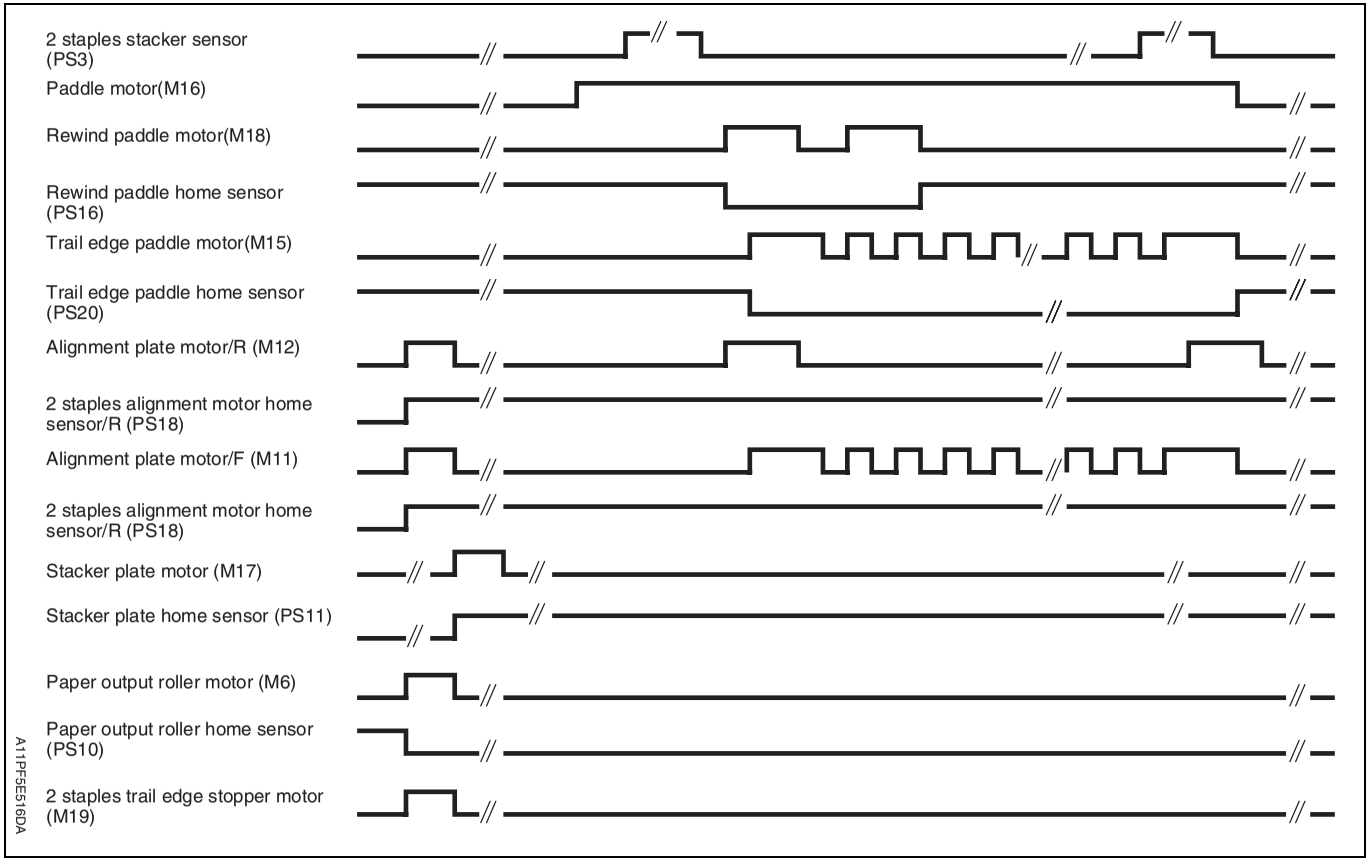
2 staples stacker sensor (PS3)
Paddle motor(M16)
Rewind paddle motor(M18)
Rewind paddle home sensor (PS16)
Trail edge paddle motor(M15)
Trail edge paddle home sensor (PS20)
Alignment plate motor/R (M12)
2 staples alignment motor home sensor/R (PS18)
Alignment plate motor/F (M11)
2 staples alignment motor home sensor/R (PS18)
Stacker plate motor (M17)
Stacker plate home sensor (PS11)
Paper output roller motor (M6)
Paper output roller home sensor (PS10)
2 staples trail edge stopper motor (M19)
A11PF5E516DA

27.4.3 Saddle stitching mode

A. Operating conditions

- Color mode/A4 or 8 $^{1}/_{2}$ x 11/1-side

B. Timing chart

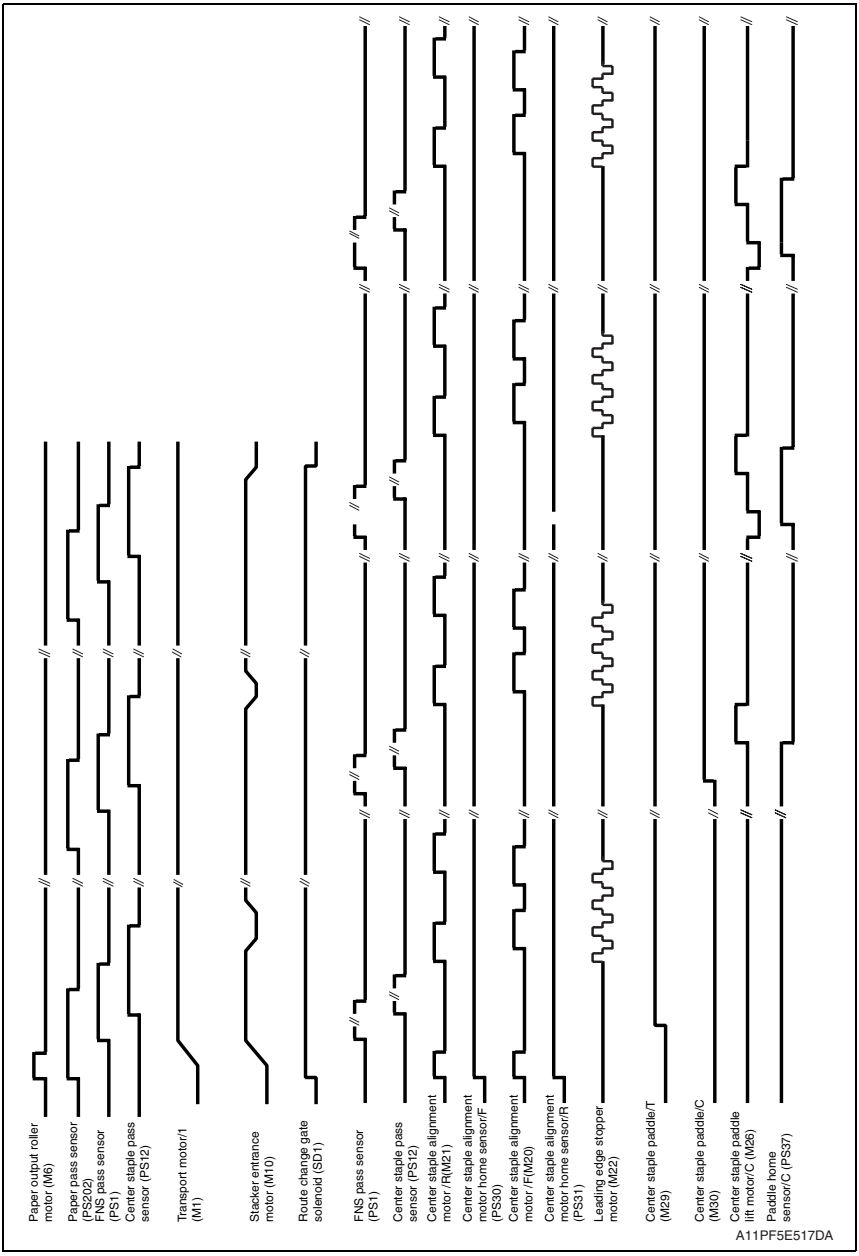

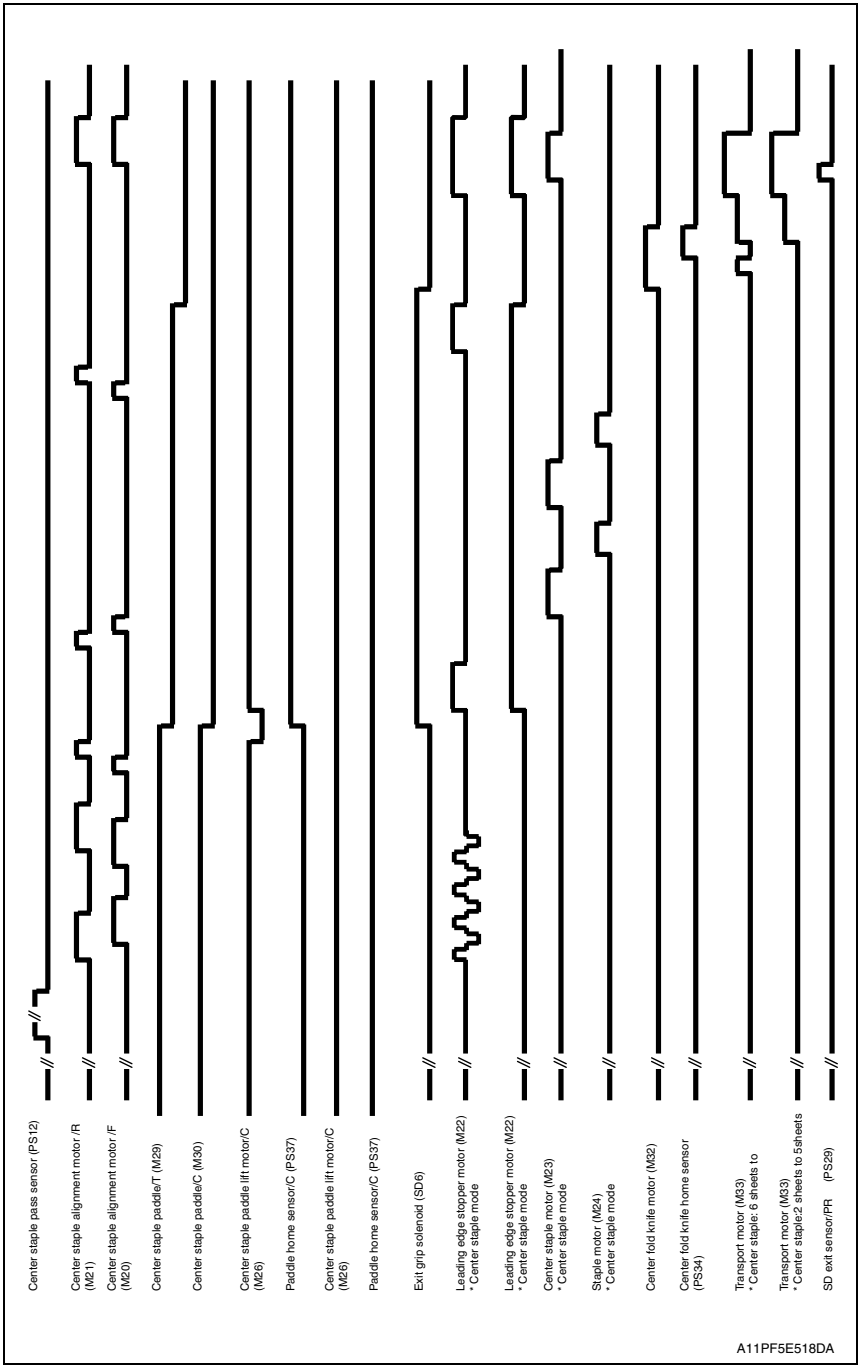
Center staple pass sensor (PS12)
Center staple alignment motor /R (M21)
Center staple alignment motor /F (M20)
Center staple paddle/T (M29)
Center staple paddle/C (M30)
Center staple paddle lift motor/C (M26)
Paddle home sensor/C (PS37)
Center staple paddle lift motor/C (M26)
Paddle home sensor/C (PS37)
Exit grip solenoid (SD6)
Leading edge stopper motor (M22)
* Center staple mode
Leading edge stopper motor (M22)
* Center staple mode
Center staple motor (M23)
* Center staple mode
Staple motor (M24)
* Center staple mode
Center fold knife motor (M32)
Center fold knife home sensor (PS34)
Transport motor (M33)
* Center staple: 6 sheets to
Transport motor (M33)
* Center staple:2 sheets to 5sheets
SD exit sensor/PR (PS29)
A11PF5E518DA

27.4.4 Tri-folding mode

A. Operating conditions

- Color mode/A4 or 8 $^1/_2$ x 11/1-side

B. Timing chart

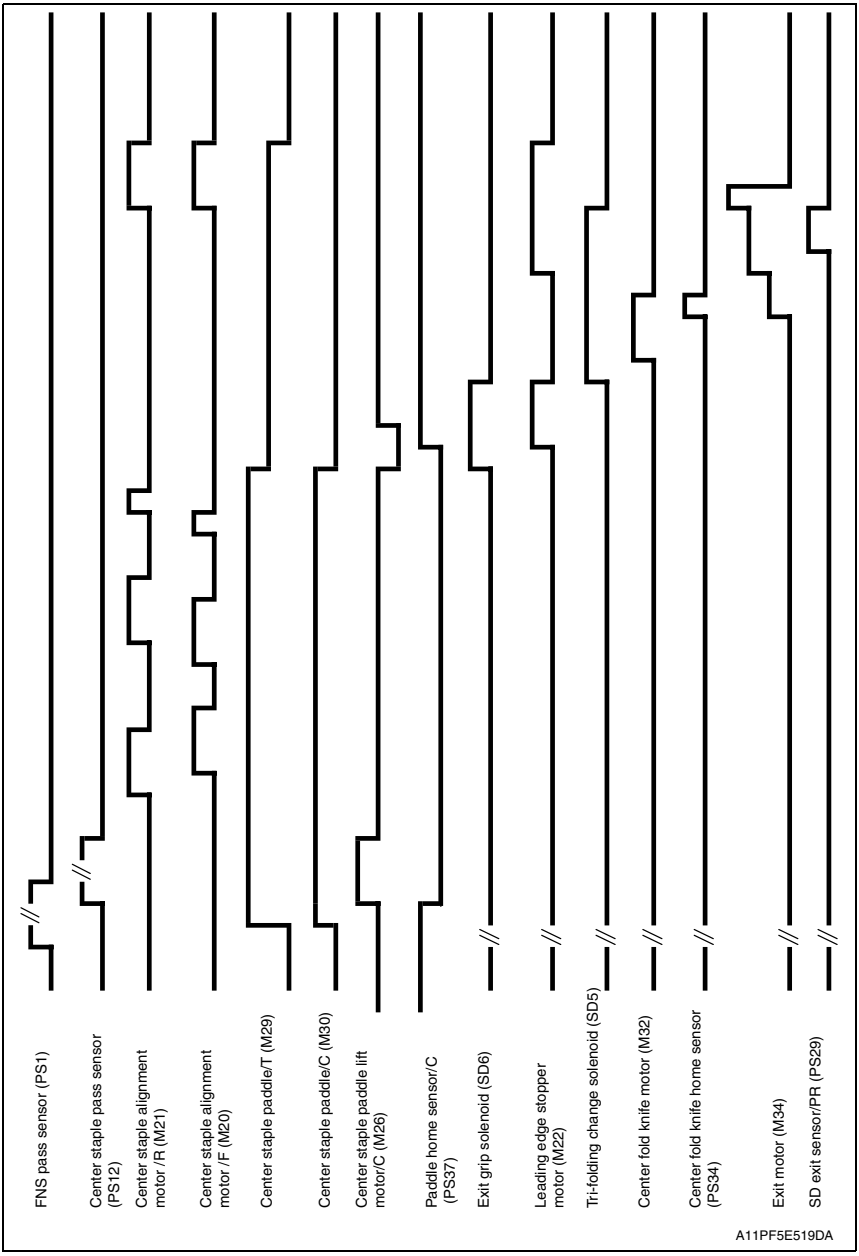

27.5 ZU-606

27.5.1 Z-folding+Punch mode

A. Operating conditions

- Z-folding / Punch mode / A3 / 3 originals / Single side

B. Timing chart

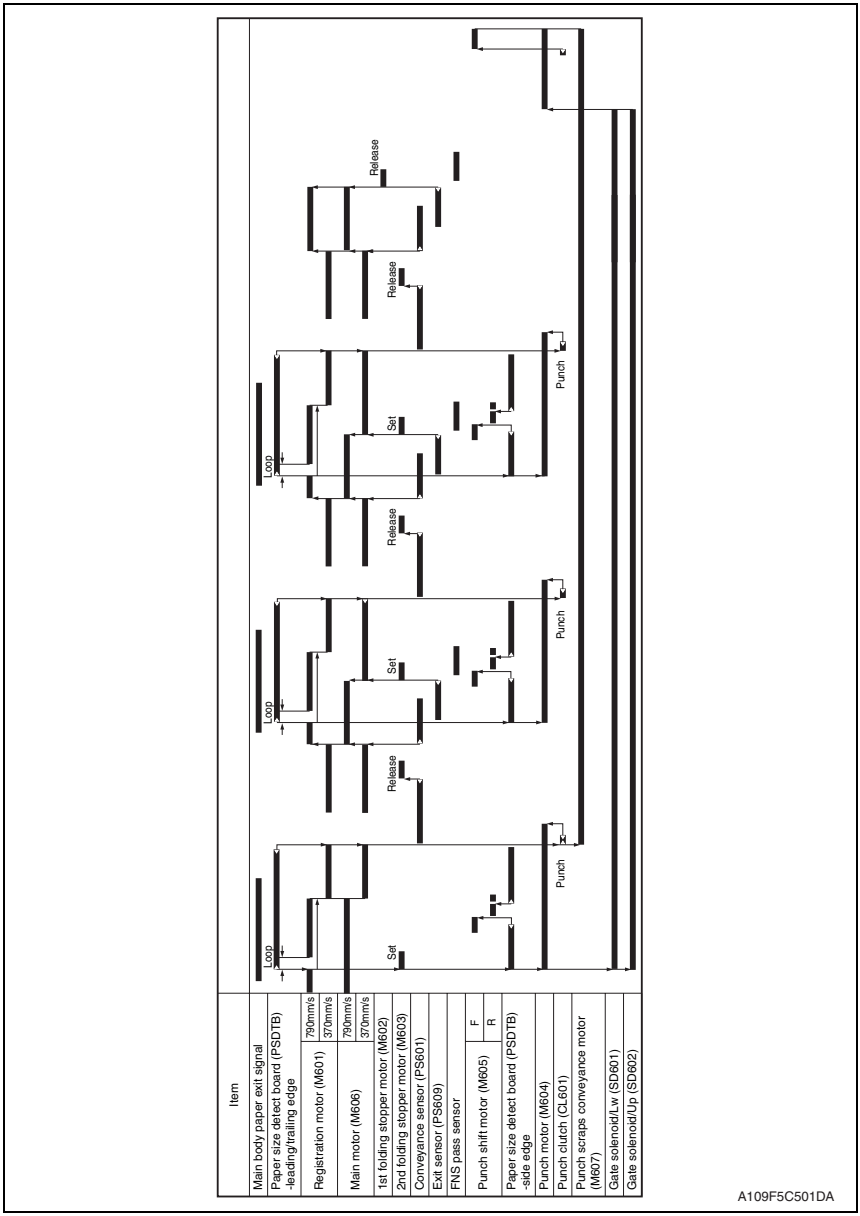

27.6 FS-527/SD-509/PK-517

27.6.1 Shift mode

A. Operating conditions

- Color mode/A4 or 8 $^1/_2$ x 11/2 originals/1-side

B. Timing chart

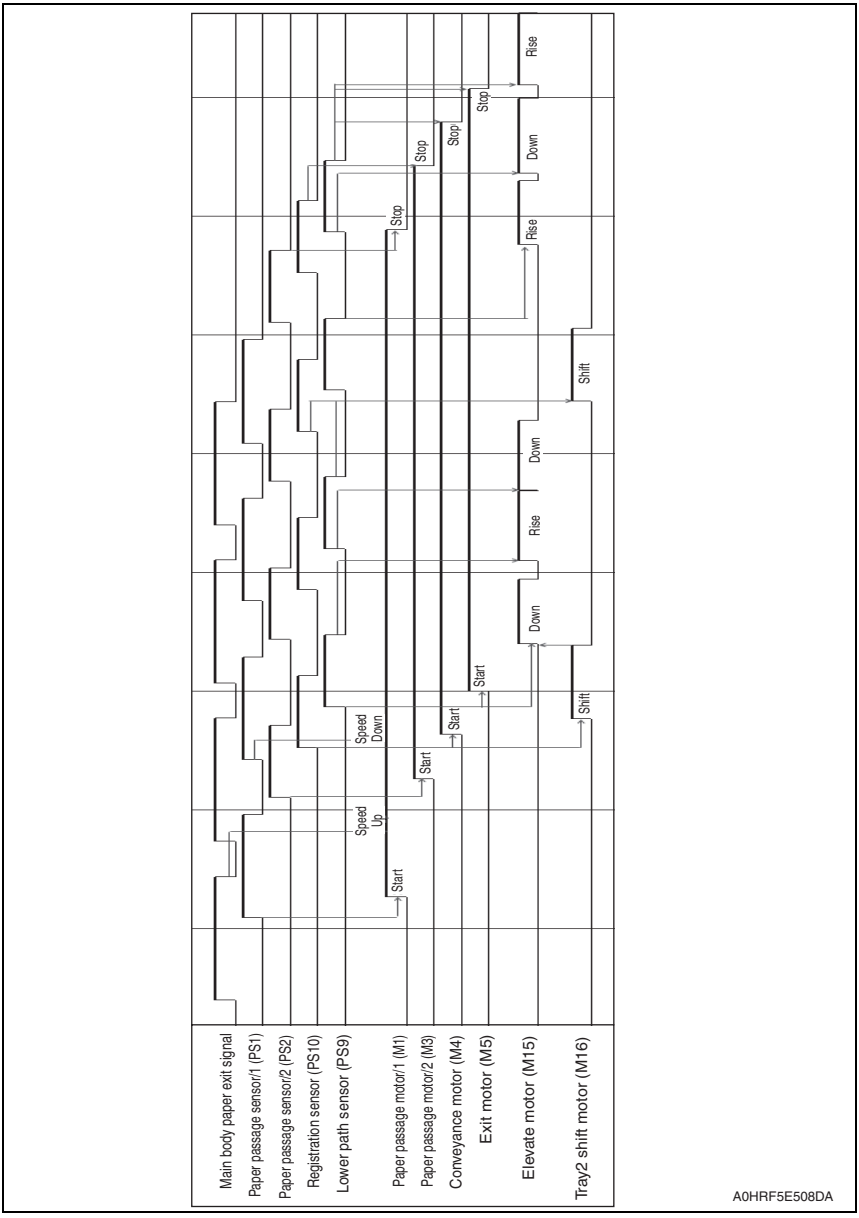

27.6.2 2 flat stitching staples mode

A. Operating conditions

- Color mode/A4 or 8 $^1/_2$ x 11/2 originals/1-side

B. Timing chart

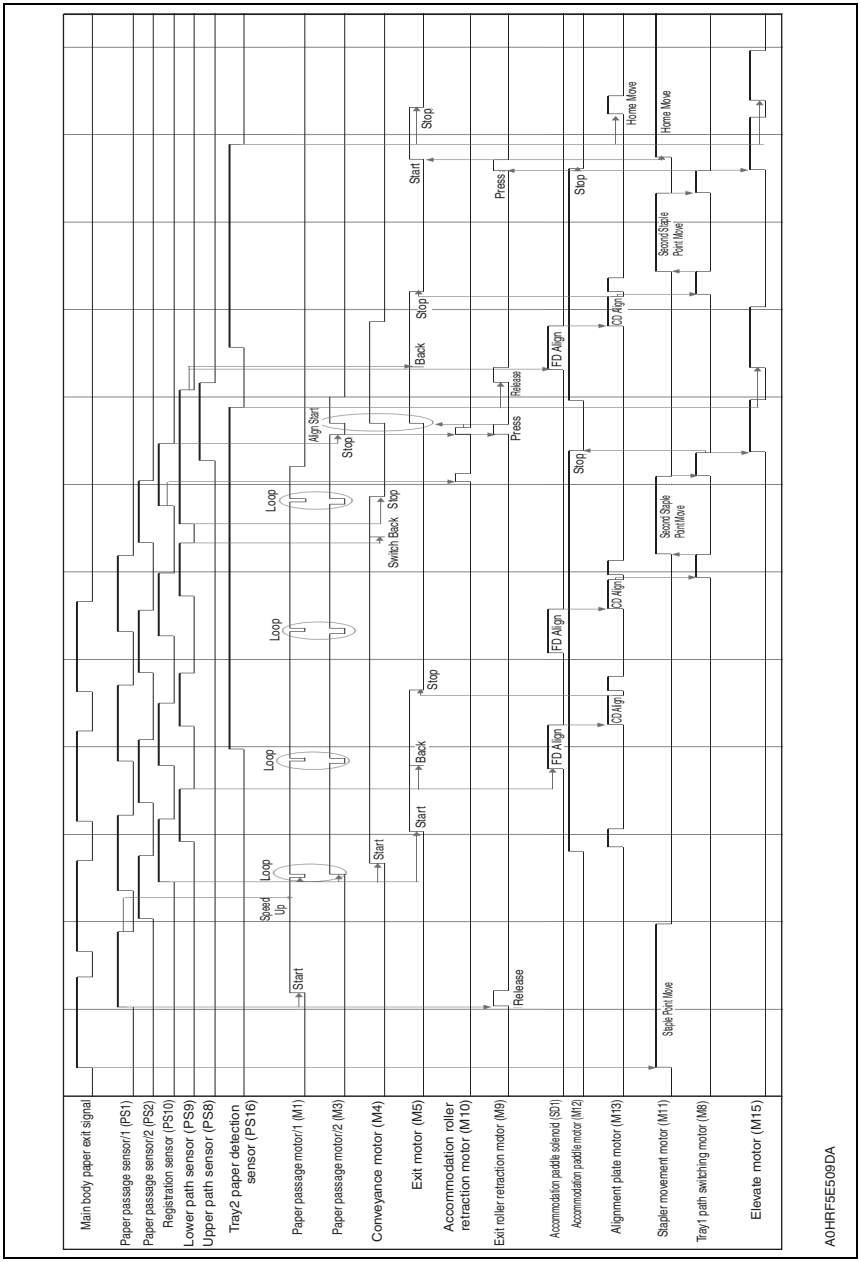

27.6.3 Center staples mode

A. Operating conditions

- Color mode/A4S or 8 $^{1}/_{2}$ x 11S/2 originals/1-side

B. Timing chart

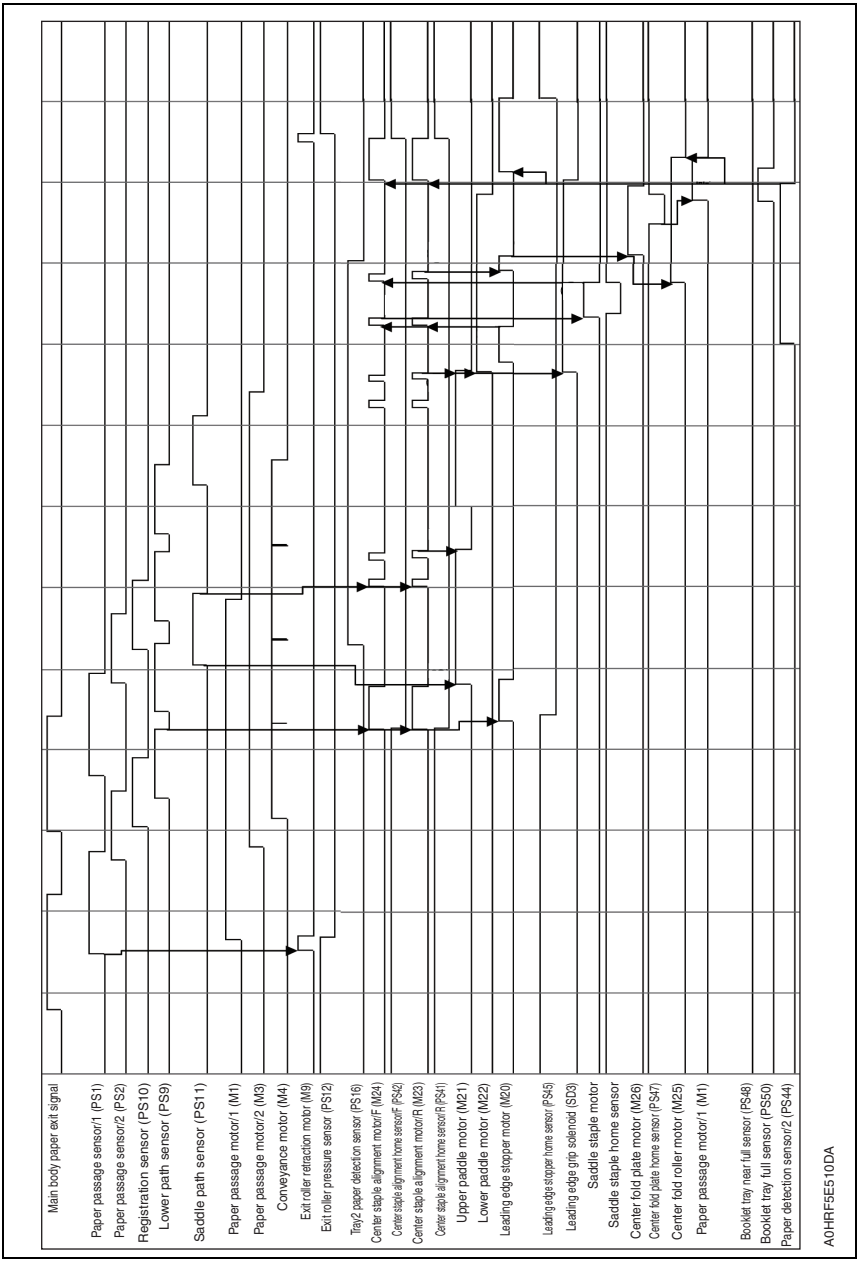

27.6.4 Punch mode

A. Operating conditions

- Color mode/A4S or 8 1/2 x 11S/2 originals/1-side

B. Timing chart

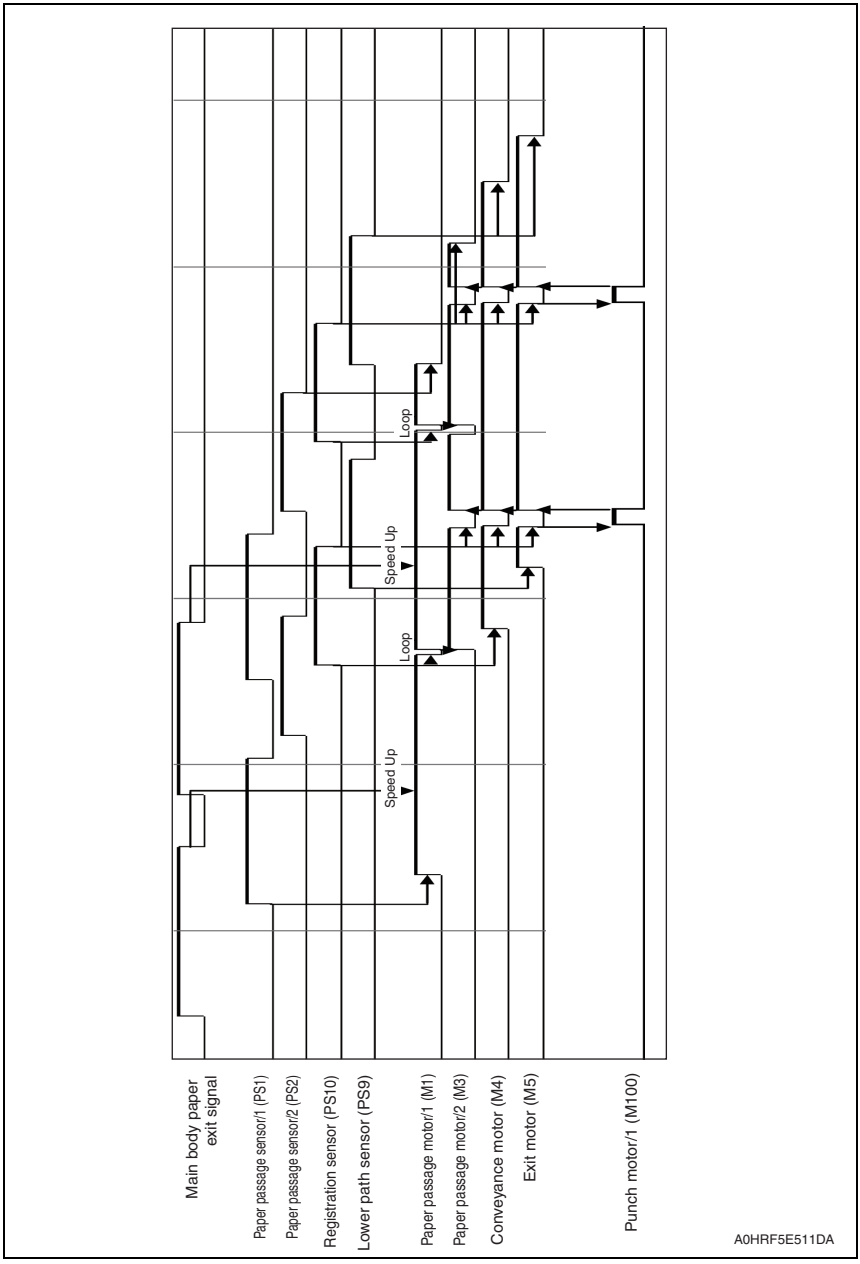

27.7 JS-603

27.7.1 Tray3 paper exit mode

A. Operating conditions

- Color mode/A4S or 8 $^{1}/_{2}$ x 11S/2 originals/1-side

B. Timing chart

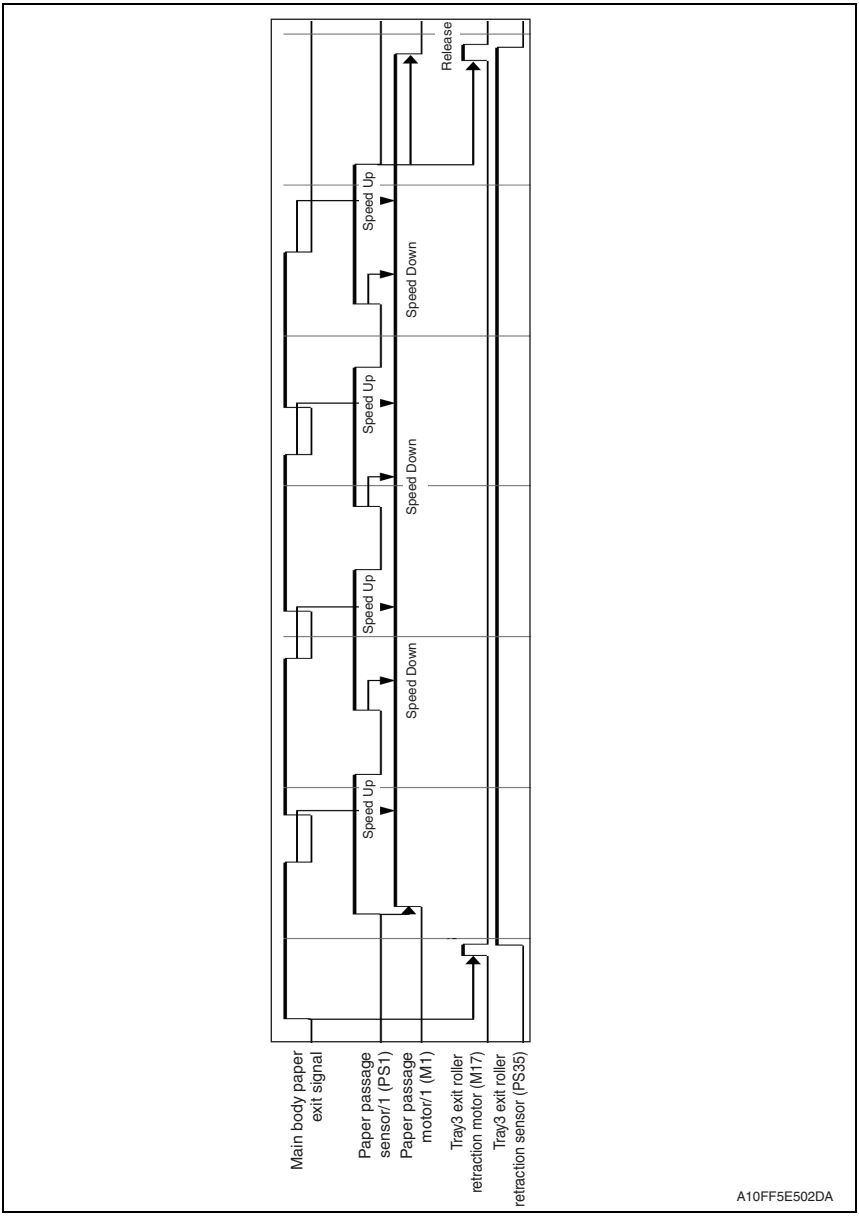

KONICA MINOLTA

SERVICE MANUAL

FIELD SERVICE

i-Option LK-101 v2 /102 /103 v2/105

2009.07

KONICA MINOLTA BUSINESS TECHNOLOGIES, INC. Ver. 2.0

Revision history

After publication of this service manual, the parts and mechanism may be subject to change for improvement of their performance.
Therefore, the descriptions given in this service manual may not coincide with the actual machine.

When any change has been made to the descriptions in the service manual, a revised version will be issued with a revision mark added as required.

Revision mark:

- To indicate clearly a section revised, is shown at the left margin of the revised section.
  The number inside represents the number of times the revision has been made.

- To indicate clearly a specific page that contains a revision or revisions, the page number appearing at the left or right bottom of the specific page is marked with .
  The number inside represents the number of times the revision has been made.

NOTE

Revision marks shown in a page are restricted only to the latest ones with the old ones deleted.

- When a page revised in Ver. 2.0 has been changed in Ver. 3.0:
  The revision marks for Ver. 3.0 only are shown with those for Ver. 2.0 deleted.
- When a page revised in Ver. 2.0 has not been changed in Ver. 3.0:
  The revision marks for Ver. 2.0 are left as they are.

Date	Service manual Ver.	Revision mark	Descriptions of revision
2009/07	2.0		Description addition of LK-105
2009/01	1.0	—	Issue of the first edition

CONTENTS

i-Option LK-101 v2/102/103 v2/105

OUTLINE

1. PRODUCT OUTLINE 1
1.1 Available function for i-Option 1
1.2 Product specification 2
1.2.1 Web browser function 2
1.2.2 Photo registration function 2

ADJUSTMENT/SETTING

2. HOW TO USE THE ADJUSTMENT/SETTING SECTION 3
3. SERVICE MODE 4
3.1 Billing Setting function setting procedure 4
3.2 Billing Setting function tree 5
3.3 Settings in the License management 6
3.3.1 Activation 6
3.3.2 Deactivation 6
3.3.3 Repair 6
3.3.4 Initialize 6
3.3.5 Request Code 6
3.3.6 List 7
3.3.7 Function List 7
3.4 License Management function setting procedure 8
3.4.1 Activation 8
3.4.2 Deactivation 12
3.4.3 Repair 17
3.4.4 Initialize 20

TROUBLESHOOTING

4. TROUBLESHOOTING OF i-Option 21
4.1 Outline 21
4.1.1 Structure of license management 21
4.1.2 License management information 21
4.2 Error message 22
4.2.1 License management error 22

Blank Page

OUTLINE

1. PRODUCT OUTLINE

1.1 Available function for i-Option

⚠1 • The functions available for i-Option LK-101 v2/102/103 v2/105 are as follows.

Function	Overview	Application			
		LK-101 v2	LK-102	LK-103 v2	LK-105
Web browser	• From the control panel, access content on the Internet or Intranet, in order to display or print this content. Additionally, you can operate PageScope Web Connection to use documents saved in user boxes.	✓		✓	
Image panel	• This is a new control panel user interface. It enables the whole operation workflow to be easily grasped.	✓		✓	
Photo registration	• You can add photo data to a registered address book entry. Registered photos are reflected in the Destination List of the Image Panel.	✓		✓	
Assignment of application keys	• Enhanced function can be assigned to the application key.	✓	✓	✓	
PDF processing	• When transmitting documents in PDF format, you can encrypt PDF file with password or digital ID, add a digital signature, and specify properties.		✓	✓	
⚠1 Searchable PDF	• You can create a text searchable PDF file by pasting transparent text data on the area of a document in which characters are recognized through an OCR process. You can create a searchable PDF file when saving or sending an original in the PDF format using the scan or User Box functions.				✓

1.2 Product specification

1.2.1 Web browser function

- Main specifications of the web browser installed are as follows.

Browser engine	NetFront
Supported protocols	HTTP, HTTPS, TCP/IP
Supported markup/script languages	HTML, CSS, JavaSrcript, Ajax
Supported image formats	JPEG, BMP, PNG, GIF, Animation GIF, PDF, XPS, Flash
Supported SSL/TLS versions	SSL2.0, SSL3.0, TLS1.0
Supported character codes	Western (ISO-8859-1), Unicode (UTF-8), Simplified Chinese (GB2312), Traditional Chinese (Big5), Japanese (Shift-JIS), Japanese (ISO-2022-JP), Japanese (EUC-JP)
Display modes	Normal, Just-Fit Rendering, Smart-Fit Rendering
PDF viewer	Adobe® Reader® LE
Flash player	Adobe® Flash® Player 7

NOTE

The Flash player installed on the MFP does not support the following:

- **The function to trigger an event caused by a key operation.**
- **The function to paste or acquire data such as character strings from the clipboard.**
- **The context menu.**
- **The Flash printing function.**
- **The function to execute JavaScript from Flash or to operate Flash by JavaScript.**
- **A screen that has no window (pop-up).**
- **The Flash bookmark function.**
- **The function to send/receive data in real time using the Flash Media Server.**
- **The function to communicate via the XMLSocket.**

1.2.2 Photo registration function

- Specifications of the photo data to be registered are as follows.

File type	BMP format, 24-bit color, uncompressed
Image size	48 x 48 pixels
Data size	6,966 Byte

ADJUSTMENT/SETTING

2. HOW TO USE THE ADJUSTMENT/SETTING SECTION

- "Adjustment/Setting" contains detailed information on the adjustment items and procedures for this machine.
- Throughout this "Adjustment/Setting," the default settings are indicated by " ".

Advance checks

Before attempting to solve the customer problem, the following advance checks must be made. Check to see if:

- The power supply voltage meets the specifications.
- The power supply is properly grounded.
- The machine shares the power supply with any other machine that draws large current intermittently (e.g., elevator and air conditioner that generate electric noise).
- The installation site is environmentally appropriate: high temperature, high humidity, direct sunlight, ventilation, etc.; levelness of the installation site.
- The original has a problem that may cause a defective image.
- The density is properly selected.
- The original glass, slit glass, or related part is dirty.
- Correct paper is being used for printing.
- The units, parts, and supplies used for printing (developer, PC drum, etc.) are properly replenished and replaced when they reach the end of their useful service life.
- Toner is not running out.

⚠ CAUTION

- **To unplug the power cord of the machine before starting the service job procedures.**
- **If it is unavoidably necessary to service the machine with its power turned ON, use utmost care not to be caught in the scanner cables or gears of the exposure unit.**
- **Special care should be used when handling the fusing unit which can be extremely hot.**
- **The developing unit has a strong magnetic field. Keep watches and measuring instruments away from it.**
- **Take care not to damage the PC drum with a tool or similar device.**
- **Do not touch IC pins with bare hands.**

3. SERVICE MODE

- When using i-Option LK-101 v2/102/103 v2/105, license management is done with the following procedures. [Service Mode] → [Billing Setting] → [License Management]
- [License Management] can set Activation/Deactivation of each i-Option functions, Repair/Initialize of functions for troubleshooting, or etc.

3.1 Billing Setting function setting procedure

1. Press the Utility/Counter key.
2. Touch [Check Details] on meter count display.
3. Press the following keys in this order.; Stop → 0 → 0 → Stop → 0 → 1

NOTE

- **When selecting [CE Authentication] under [Enhanced Security] available from Service Mode, authentication by CE password is necessary.**
  Enter the 8 digits CE password, and touch [END].
  (The initial setting for CE password is "92729272.")
- **When the following setting is set to "ON", CE password authentication is necessary.**
  [Administrator Settings] → [Security Settings] → [Enhanced Security Mode]
- **If a wrong CE password is entered, re-enter the right password. The machine will not enter Service Mode unless the CE password is entered correctly. To return to the Basic screen, turn OFF the sub power switch and turn it ON again.**
  When the following setting is set to "Mode 2", operation will be prohibited since it indicates authentication failure by failing to enter the correct CE password within the specified number of times.
  if the access lock is activated, the lock release timer starts to operate by input the Stop → 0 → 9 → 3 → 1 → 7 in [Meter Count] → [Check Details] → [Coverage Rate] after the main power switch is turned OFF and On. When the timer reaches the time specified in this setting, the access lock is released.
- **The service code entered is displayed as "∗."**

4. The Service Mode menu will appear.

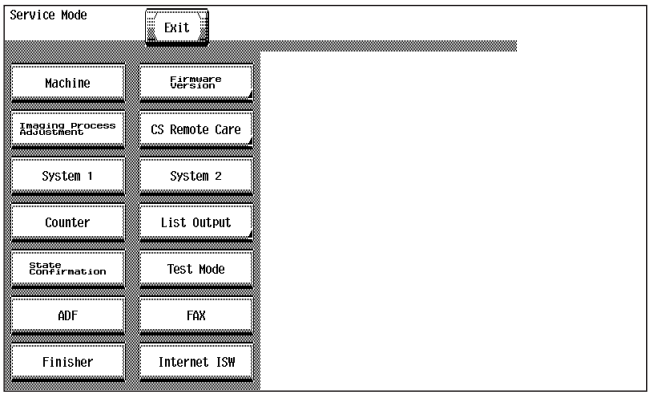

A00JF3E534DA

5. Press the following keys in this order.
Stop → 9

6. Billing Setting menu will appear.

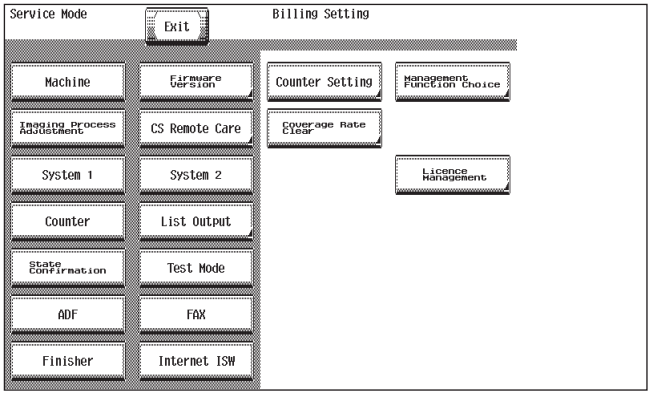

A00JF3E536DB

3.2 Billing Setting function tree

Service Mode			Ref. Page
Billing Setting	Counter Setting		*1
	Management Function Choice		
	Coverage Rate Clear		
	License Management *2	Activation *2	P.6
		Deactivation *2	P.6
		Repair *2, 3	P.6
		Initialize *2	P.6
		Request Code *2	P.6
		List *2	P.7
		Function list *2	P.7

*1: For details, see the main body service manual.
*2: It is displayed only when the expanded memory furnished with the optional upgrade kit UK-203 is mounted.
*3: It is displayed only when “license management error” occurs.
See P.22

3.3 Settings in the License management

3.3.1 Activation

Functions	• To activate i-Option functions.
Use	• To activate i-Option functions with CE. • The functions can be activated by selecting the desired function and enter the appropriate license code and function code. • Administrators also can activate i-Option functions through Administrator Settings.
Setting/ Procedure	See P.8

3.3.2 Deactivation

Functions	• To deactivate i-Option functions.
Use	• To deactivate i-Option functions due to registration error, expiration of lease term, change to other MFP or etc. • The functions can be deactivated by selecting the desired function and enter the appropriate deactivation code.
Setting/ Procedure	See P.12

3.3.3 Repair

Functions	• To repair license management information.
Use	• To be used when license management information is lost due to replacement of NVRAM board or service EEPROM board or any other trouble. • License management information can be repaired by acquiring repair code with repair request code, and entering the repair code.
Setting/ Procedure	See P.17

3.3.4 Initialize

Functions	• To initialize license management information.
Use	• To be used when license management information cannot be repaired. • License management information should be initialized when the machine fails to generate request code or repair request code due to any trouble and the information cannot be repaired.
Setting/ Procedure	See P.20

3.3.5 Request Code

- When the license management error is occurred, it will not be displayed until the repair code is input.

Functions	• To display and print request code and serial number.
Use	• To check the request code and serial number.
Setting/ Procedure	• Set A4S or 8 $^{1}/_{2}$ x 11S paper to the tray, and press start key at request code screen to print.

3.3.6 List

Functions	• To display and print deactivation complete code and serial number.
Use	• To display and print deactivation complete code and serial number.
Setting/ Procedure	• Set A4S or 8 $^{1}/_{2}$ x 11S paper to the tray, and press start key at deactivation complete code screen to print.

3.3.7 Function List

Functions	• To display activated functions.
Use	

3.4 License Management function setting procedure

- Each setting procedure of License Management function is as follows.
- You need to access License Management System (LMS) to implement each function setting.

3.4.1 Activation

1. Prepare “token certification.”
2. Call the Billing Setting to the screen.
See P.4
3. Display and confirm the serial number and request code with the following procedure.
[License Management] → [Request code]
See P.6

NOTE

- **The function enhanced version firmware for i-Option is set at the factory before shipping, this procedure is not needed.**

4. Access to LMS web site (for service).
5. Click [License Registration].
6. Select the language.

7. Enter request code and serial number, and click [Next].

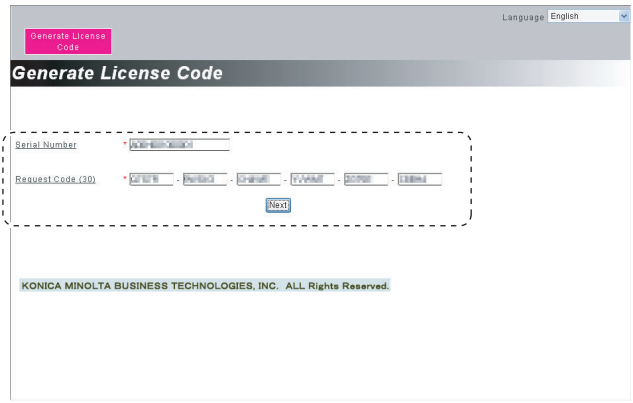

A0PDF3E524DA

8. Enter “token number” described in the “token certificate”, and select the product name.
9. Click [Next].

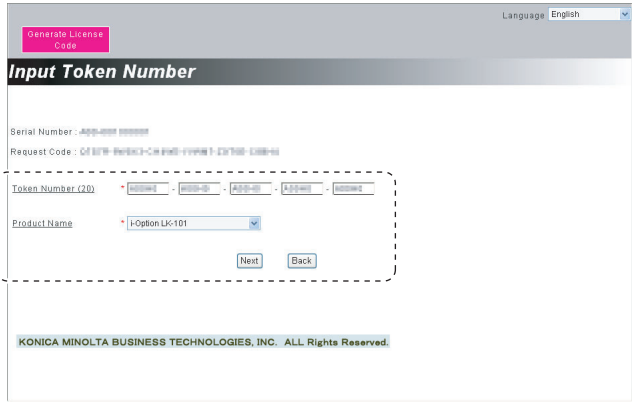

A0PDF3E525DA

10. Confirm the registered information, and click [Generate License Code].

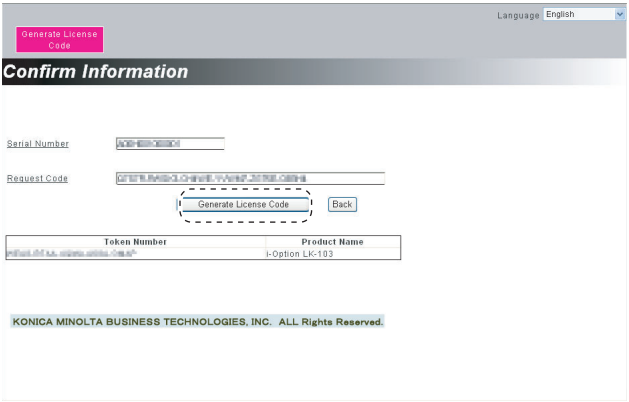

A0PDF3E526DA

11. LMS issues license code and function code.

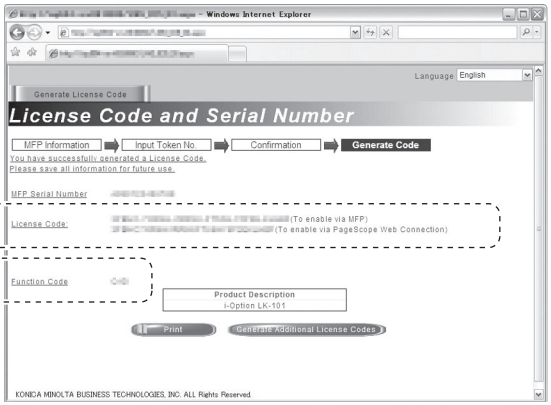

A0P0F3E561DA

12. Select [Activation] → [License code] at the MFP.

13. Enter the license code and the function code issued by LMS using the keyboard on the screen, and touch [END].

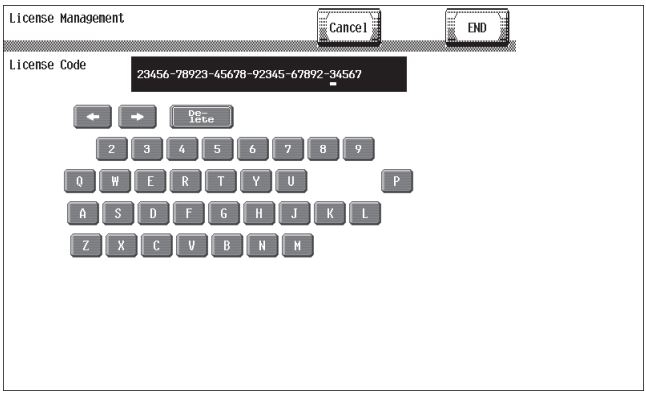

A0PDF3E537DA

14. Touch [Apply].

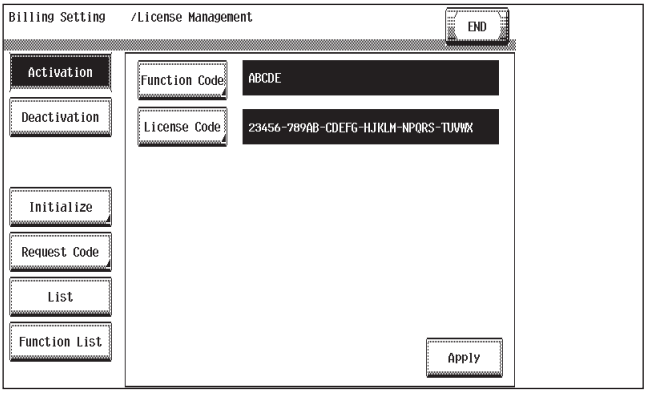

A0P0F3E562DA

15. Follow the massage appearing on the screen and turn OFF and ON the main power switch.

3.4.2 Deactivation

1. Call the Billing Setting to the screen.
   See P.4
2. Display and confirm the serial number with the following procedure.
   [License Management] → [Request code]
   See P.6
3. Access to LMS web site (for service).
4. Click [MFP] and select the language.

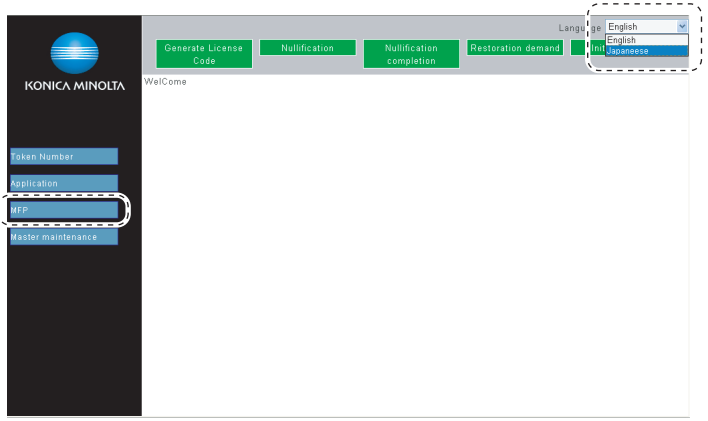

A0PDF3J515DA

5. Click [Nullification].

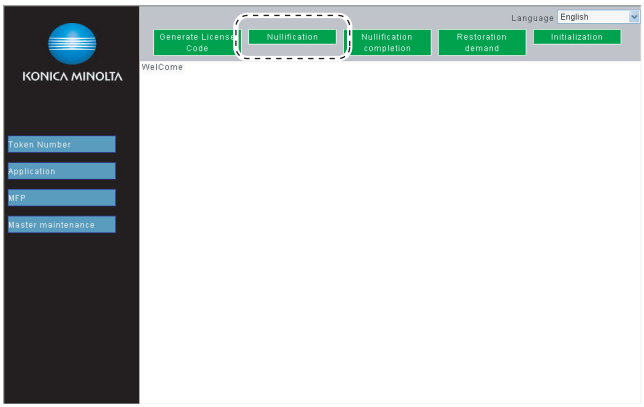

A0PDF3E528DA

6. Enter serial number, and click [Retrieval].

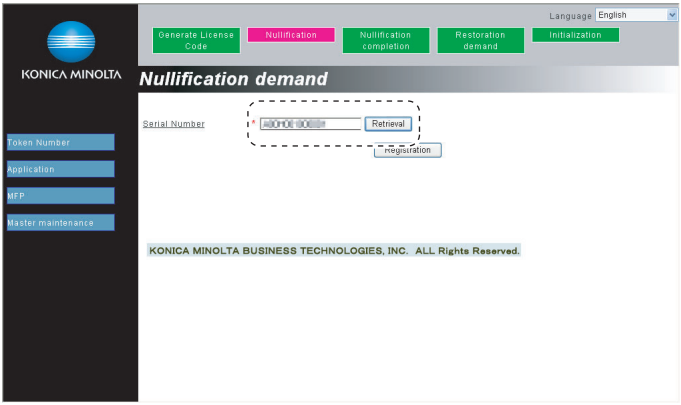

A0PDF3E529DA

7. Select i-Option to be deactivated, and click [Registration].

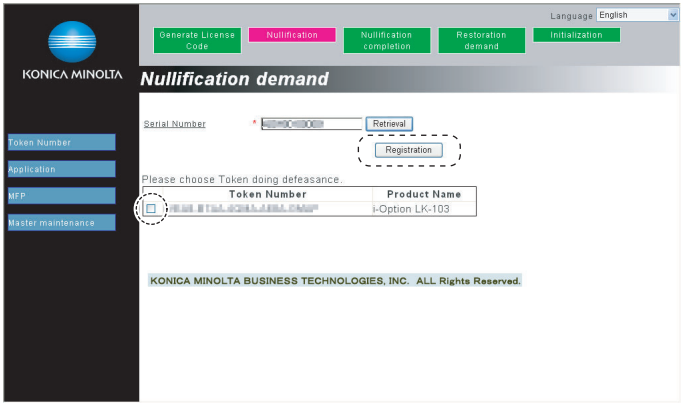

A0PDF3E530DA

8. Nullification code is issued.

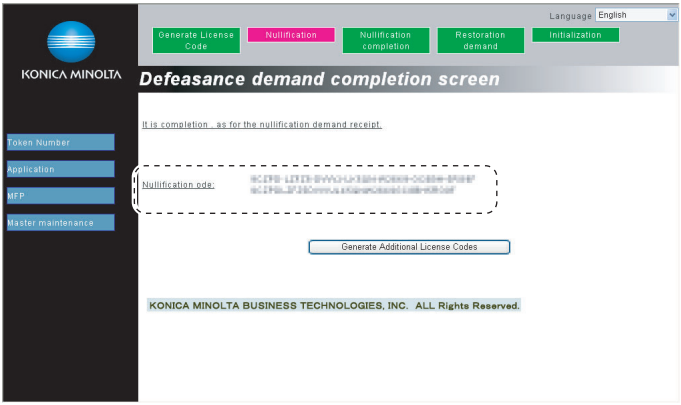

A0PDF3E531DA

9. Select [Deactivation] → [Deactivation code] at the MFP.

10. Enter the nullification code issued by LMS using the keyboard on the screen, and touch [END].

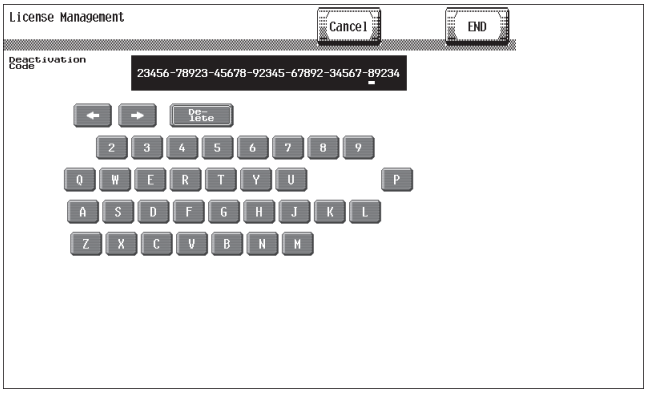

A0PDF3E539DA

11. Select i-Option to be deactivated, and touch [Apply].

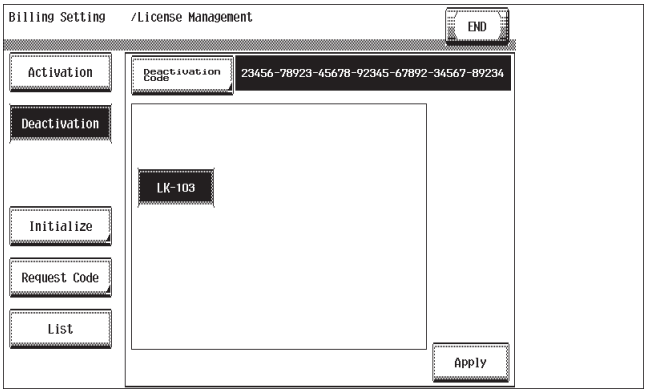

A0PDF3E540DA

12. When the deactivation is done appropriately, serial number and deactivation complete code are issued.

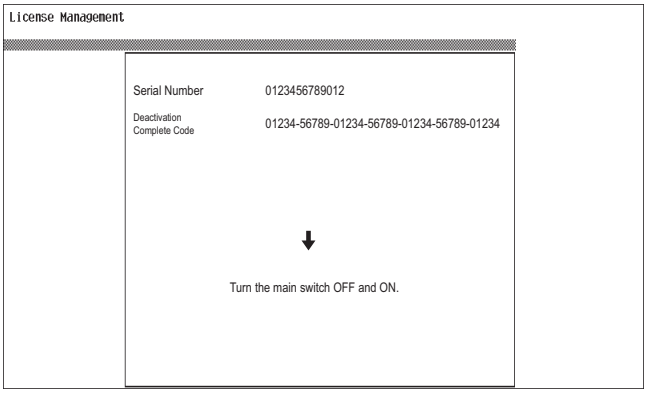

A0PDF3E542DA

NOTE

- **When A4S or 8 $^1/_2$ x 11S is set to the paper feed tray, the above-mentioned serial number and deactivation complete code can be printed out by pressing the start key.**
- **Serial number and deactivation complete code can be confirmed in [List] available from [License Management].**

13. Follow the message appearing on the screen and turn OFF and ON the main power switch.

14. Click [Nullification completion] at LMS web site (for service).

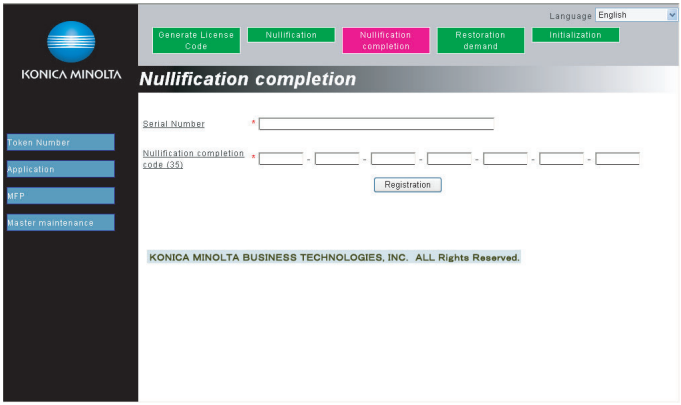

A0PDF3E532DA

15. Enter serial number and nullification code, and click [Registration].

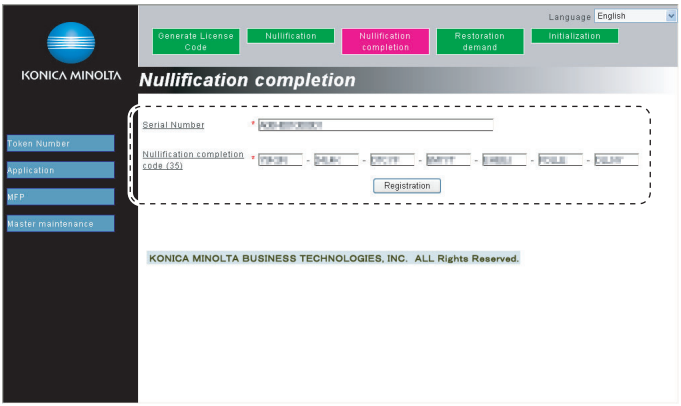

A0PDF3E533DA

16. Message for nullification completion appears.

3.4.3 Repair

1. Call the Billing Setting to the screen.
   See P.4
2. Display and confirm serial number, repair request code and request code with the following procedure.
   [License Management] → [Repair] → [Repair Request Code]
   See P.6

NOTE

- **Do not turn OFF/ON the main power switch until the repair code is input after this procedure.**

3. Access to LMS web site (for service).
4. Click [MFP] and select the language.

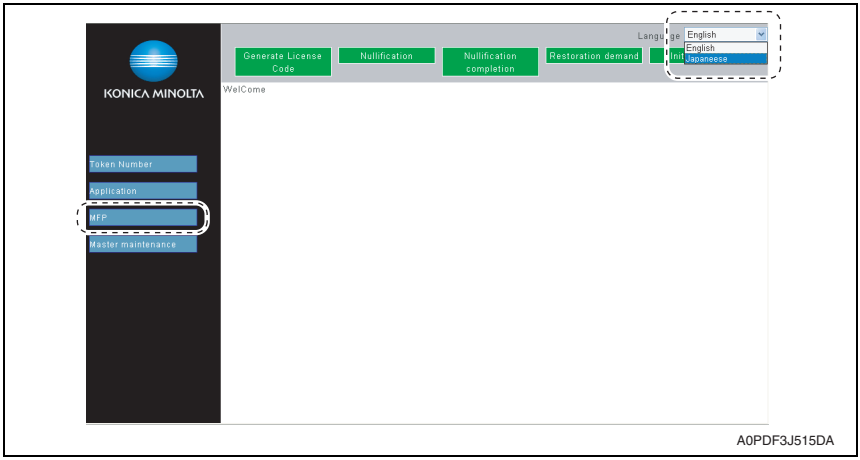

A0PDF3J515DA

5. Click [Restoration demand].

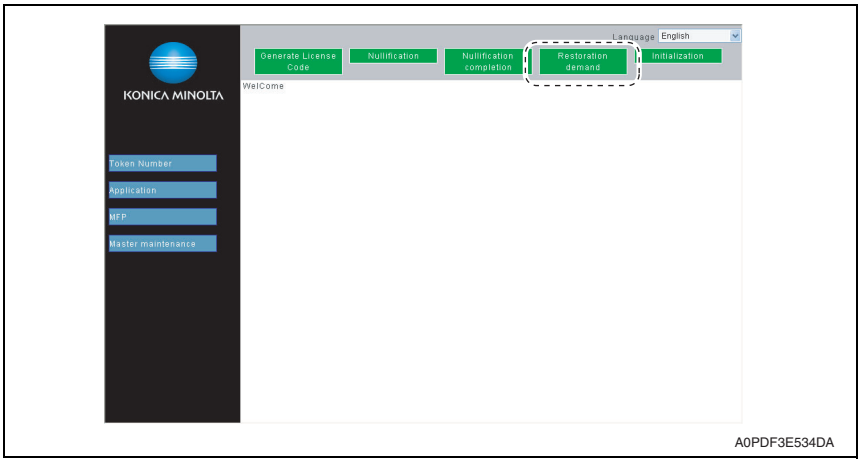

A0PDF3E534DA

6. Enter serial number, restoration demand code and request code, and click [Registration].

A0PDF3E535DA

7. Request permission code is issued.
If any function needs to be activated, appropriate license code is also issued.

A0PDF3E536DA

8. Select [Repair] → [Repair Code] at the MFP.
9. Enter the request permission code issued by LMS using the keyboard on the screen, and touch [END].

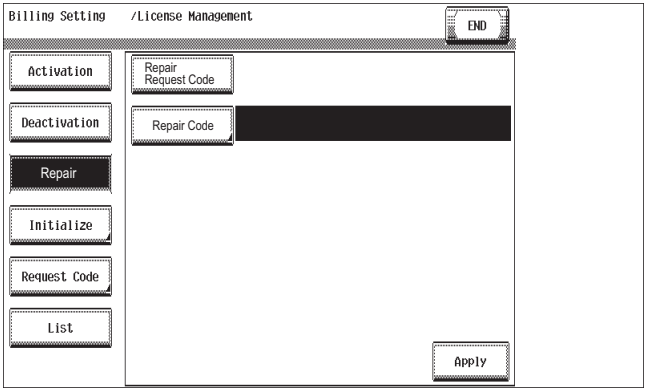

A0PDF3E543DA

10. Touch [Apply].

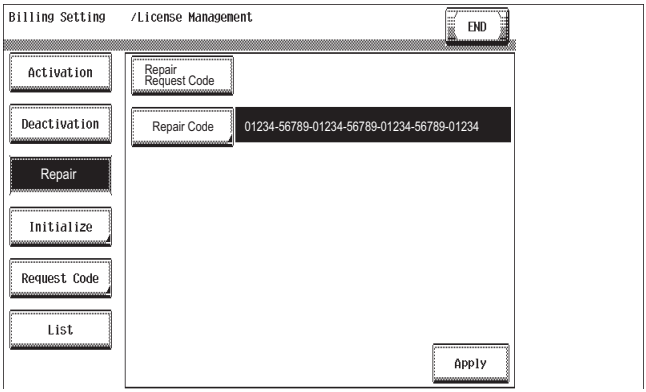

A0PDF3E544DA

11. Close Service Mode, confirm that the functions work correctly.

3.4.4 Initialize

- When license management information cannot be repaired, initialize the information with the following procedure.

1. Contact the license management section of sales company to report the information necessary to issue the initialize code.
2. The license management section of sales company supplies the initialize code.
3. Call the Billing Setting to the screen.
See P.4
4. Touch [License Management] → [Initialize].
5. Enter the initialize code issued by call center using the keyboard on the screen, and touch [Apply].

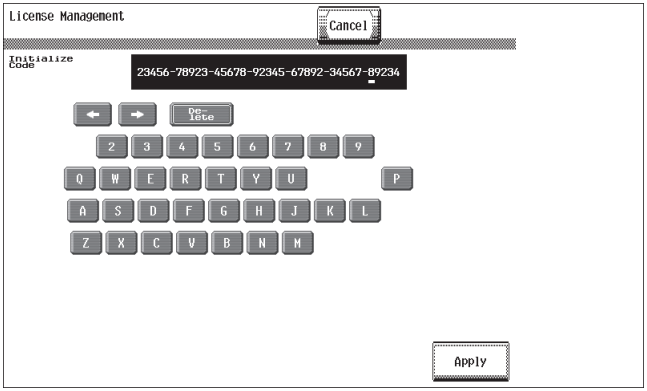

A0PDF3E541DA

6. After completing the initialization, follow the message appearing on the screen and turn OFF and ON the main power switch.

TROUBLESHOOTING

4. TROUBLESHOOTING OF i-Option

4.1 Outline

4.1.1 Structure of license management

- The functions available with i-Option can be activated by entering “License code” to the MFP.
- License code is issued and controlled by License Management System (LMS).
  To prevent unauthorized use of the license code, each MFP is identified individually so that the license code cannot be activated unless it matches with the authorized MFP.

4.1.2 License management information

- Since license code needs to identify each MPF, it is issued using the serial number of MFP and “unique value” that is generated inside MFP.
- The “unique value” is stored to the NVRAM board on the MFP board and at the same time some parts of it are memorized by service EEPROM board. The activated function cannot be used unless the both figures conform.
  Since these figures are out of target of NVRAM data back, when any trouble occurs at either nonvolatile memory or either of them is replaced with new one, “license management error” is generated due to discordance of the figures.

4.2 Error message

4.2.1 License management error

- When abnormal value is detected in the license management information that is stored to the NVRAM board or service EEPROM board, or some values are detected cleared, warning is issued to let the user know the abnormality.
- The abnormality is detected at the timing of start-up or restart due to any condition.
- When the abnormality is detected, the corresponding i-Option function cannot be used, other ordinal functions, however, such as copy, scanning, print or etc, can be used without interruption.

A. Example of error message

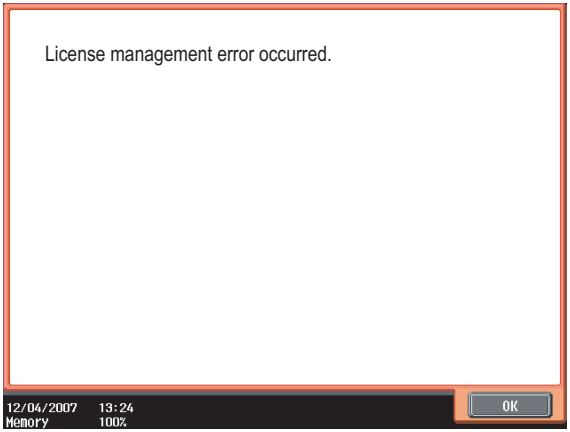

A0PDF4E502DA

B. Main reasons of trouble

- The following shows the possible trouble factors and their countermeasure.

Board replacement	Countermeasure
• When NVRAM board on MFP board is replaced with new one.	Repair ⇒ Activation
• When service EEPROM board is replaced with new one.	Repair
• When NVRAM board and service EEPROM board are replaced with the new ones at the same time.	Initialize ⇒ Activation
• When mounting the NVRAM board of the machine whose function(s) have already been activated.	Initialize ⇒ Activation
• When mounting the service EEPROM board of the machine whose function(s) have already been activated.	Initialize ⇒ Activation
• When mounting the NVRAM board and the service EEPROM board of the machine whose function(s) have already been activated.	Initialize ⇒ Activation

KONICA MINOLTA

SERVICE MANUAL

FIELD SERVICE

DF-618/SP-501

2009.07

KONICA MINOLTA BUSINESS TECHNOLOGIES, INC. Ver. 2.0

Revision history

After publication of this service manual, the parts and mechanism may be subject to change for improvement of their performance.
Therefore, the descriptions given in this service manual may not coincide with the actual machine.

When any change has been made to the descriptions in the service manual, a revised version will be issued with a revision mark added as required.

Revision mark:

- To indicate clearly a section revised, △1 is shown at the left margin of the revised section.
  The number inside △1 represents the number of times the revision has been made.

- To indicate clearly a page that contains the revision, ▲1 is shown near the page number of the corresponding page.
  The number inside ▲1 represents the number of times the revision has been made.

NOTE

Revision marks shown in a page are restricted only to the latest ones with the old ones deleted.

- When a page revised in Ver. 2.0 has been changed in Ver. 3.0:
  The revision marks for Ver. 3.0 only are shown with those for Ver. 2.0 deleted.
- When a page revised in Ver. 2.0 has not been changed in Ver. 3.0:
  The revision marks for Ver. 2.0 are left as they are.

Date	Service manual Ver.	Revision mark	Descriptions of revision
2009/07	2.0	△1	Error correction
2009/01	1.0	—	Issue of the first edition

CONTENTS

DF-618/SP-501

OUTLINE

1. PRODUCT SPECIFICATIONS 1

MAINTENANCE

2. PERIODICAL MAINTENANCE PROCEDURE 5
2.1 Take-up section 5
2.1.1 Cleaning of the pick-up roller/feed roller 5
2.1.2 Cleaning of the separation roller 5
2.1.3 Replacing the pick-up roller / feed roller 6
2.1.4 Replacing the separation roller 7
2.2 Transport section 9
2.2.1 Cleaning of the miscellaneous rolls 9
2.2.2 Cleaning of the miscellaneous rollers 10
2.3 Scanning section 12
2.3.1 Cleaning of the scanning guide 12
2.3.2 Cleaning of the reflective sensor section 13
3. OTHER MAINTENANCE ITEM 14
3.1 Disassembly/Adjustment prohibited items 14
3.2 Disassembly/reassembly parts list 15
3.3 Disassembly/reassembly procedure 15
3.3.1 Feed cover 15
3.3.2 Front cover 17
3.3.3 Rear cover 17
3.3.4 Document feed tray front cover 18
3.3.5 Reverse automatic document feeder 19
3.3.6 DF control board (DFCB) 21
3.3.7 Document width detection variable resistor (VR1) 22
3.3.8 Switch back solenoid (SD1) 24
3.3.9 Exit switch back solenoid (SD2) 25
3.3.10 Reading motor (M1) 26
3.3.11 Take-up motor (M2) 27
3.3.12 Registration motor (M7) 27
3.3.13 Exit motor (M3) 28
3.3.14 Reading roller pressure/retraction motor (M4) 29

3.3.15 Cooling fan (FM1) 30
3.3.16 Replacing the stamp unit 30
3.3.17 Replacing the stamp 32
4. SERVICE TOOL 32
4.1 CE tool list 32

ADJUSTMENT/SETTING

5. HOW TO USE THE ADJUSTMENT SECTION 33
6. MECHANICAL ADJUSTMENT 34
6.1 Mechanical adjustment of the original document feed section 34
6.1.1 Adjusting the height 34
6.1.2 Adjusting skew feed 35

OUTLINE

1. PRODUCT SPECIFICATIONS

A. Type

Name	Reverse automatic document feeder	
Type	Paper feed section	Paper feed from top of stack
	Image reading section	Sheet-through system
	Turnover section	Switchback system
	Exit section	Straight exit system
Installation	Screw cramp to the main body	
Document alignment	Center	
Document loading	Face up	

B. Functions

Modes	Standard mode / Mixed original detection mode / FAX mode

C. Paper type

Type of document	Standard mode	1-sided mode 35 to 210 g/m² (9.25 to 55.75 lb)
		2-sided mode 50 to 128 g/m² (13.25 to 34 lb)
	Mixed original detection mode	1-sided / 2-sided mode 50 to 128 g/m² (13.25 to 34 lb)
	FAX mode	1-sided mode 35 to 210 g/m² (9.25 to 55.75 lb)
		2-Sided Mode 50 to 128 g/m² (13.25 to 34 lb)
Detectable document size*1	Standard mode/FAX mode	Metric area: B6S to A3 Inch area: 5 $^1/_2$ x 8 $^1/_2$ to 11 x 17
Capacity	100 sheets (80 g/m²) or stack of 14 mm and below	

*1: For the combined original detection mode, refer to the mixed original feed chart.

D. Paper feed prohibited originals

- If fed, trouble occurrence will be highly possible.

Type of original	Possible trouble
Sheets stapled or clipped together	Paper feed failure, damaged sheet, defective drive mechanism due to jammed staples or clips
Sheets glued together	Paper feed failure, damaged sheet
Book original	Paper feed failure, damaged sheet
Original weighing less than 35 g/m^2 (9.25 lb) or 210 g/m^2 (55.75 lb) or more	Paper feed failure, transport failure
Sheets folded, torn or wrinkled	Paper feed failure, damaged sheet, transport failure
Sheets severely curled	Sheets misfed due to being dog-eared or fed in askew
OHP film (Transparency film)	Paper feed failure, transport failure
Label paper	Paper feed failure, transport failure
Offset master paper	Paper feed failure, transport failure
Glossy photographic paper or glossy enamel paper	Transport failure, damaged sheet
Sheets clipped or notched	Damaged sheet, transport failure
Sheets patched	Patched part folded or torn sheet

E. Paper feed not guaranteed originals

- If fed, paper feed will be possible to some extent but trouble occurrence will be possible.

Type of Original	Possible Trouble
Sheets lightly curled (Curled amount: 10 to 15 mm)	Dog-eared, exit failure, transport failure
Heat sensitive paper	Edge folded, exit failure, transport failure
Ink jet paper	Paper feed failure, transport failure
Sheets with smooth surface (Coated paper)	Paper feed failure, transport failure
Intermediate paper	Paper feed failure, transport failure
Paper immediately after paper exit from the main unit	Paper feed failure, transport failure
Paper with many punched holes (e.g., loose leaf) limited to vertical feeding	Multi-page feed due to flashes from holes
Sheets with 2 to 4 holes	Transport failure
Sheets two-folded or Z-folded	Transport failure, image deformation
Sheets with rough surface (e.g., letterhead)	Paper feed failure

F. Mixed original feed chart

For metric

	Max. original size	297 mm		257 mm		210 mm		182 mm	148 mm	128 mm
Mixed original size		A3	A4	B4	B5	A4S	A5	B5S	A5S	B6S
297 mm	A3	OK	OK	-	-	-	-	-	-	-
	A4	OK	OK	-	-	-	-	-	-	-
257 mm	B4	OK	OK	OK	OK	-	-	-	-	-
	B5	OK	OK	OK	OK	-	-	-	-	-
210 mm	A4S	OK	OK	OK	OK	OK	OK	-	-	-
	A5	NG	NG	OK	OK	OK	OK	-	-	-
182 mm	B5S	NG	NG	OK	OK	OK	OK	OK	-	-
148 mm	A5S	NG	NG	NG	NG	NG	NG	NG	OK	-
128 mm	B6S	NG	NG	NG	NG	NG	NG	NG	OK	OK

For inch

	Max. original size	11		8 1/2			5 1/2
Mixed original size		11 x 17	8 1/2 x 11	8 1/2 x 14	8 1/2 x 11S	5 1/2 x 8 1/2	5 1/2 x 8 1/2S
11	11 x 17	OK	OK	-	-	-	-
	8 1/2 x 11	OK	OK	-	-	-	-
8 1/2	8 1/2 x 14	OK	OK	OK	OK	OK	-
	8 1/2 x 11S	OK	OK	OK	OK	OK	-
	5 1/2 x 8 1/2	NG	NG	OK	OK	OK	-
5 1/2	5 1/2 x 8 1/2S	NG	NG	NG	NG	NG	OK

OK	Mixed original feed available (Tilted with in 1.5% or less)
NG	No. mixed original feed
-	Can not set original

G. Machine specifications

Power requirements	DC 24 V (supplied from the main unit)
	DC 5 V
Max. power consumption	60 W or less
Dimensions	618 mm (W) x 575 mm (D) x 130 mm (H) 24.33 inch (W) x 22.64 inch (D) x 5.12 inch (H)
Weight	16.0 kg (35.27 lb)

H. Operating environment

Conforms to the operating environment of the main body.

NOTE

- **These specifications are subject to change without notice.**

MAINTENANCE

2. PERIODICAL MAINTENANCE PROCEDURE

NOTE

- **The alcohol described in the cleaning procedure of maintenance represents the isopropyl alcohol.**

2.1 Take-up section

2.1.1 Cleaning of the pick-up roller/feed roller

A. Periodically cleaning parts/cycle

- Pick-up roller: Every 50,000 counts
- Feed roller: Every 50,000 counts

B. Procedure

1. Open the feed cover.
See P.15

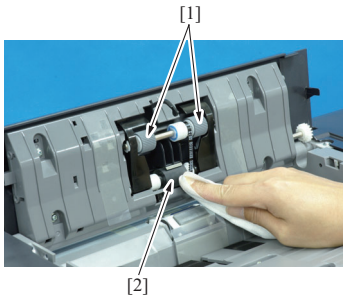

2. Using a cleaning pad with alcohol, wipe the pick-up roller [1] / feed roller [2] clean of dirt.

2.1.2 Cleaning of the separation roller

A. Periodically cleaning parts/cycle

- Separation roller: Every 50,000 counts

B. Procedure

1. Open the feed cover.
See P.15

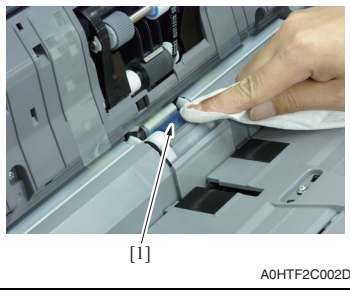

2. Using a cleaning pad with alcohol, wipe the separation roller [1] clean of dirt.

2.1.3 Replacing the pick-up roller / feed roller

A. Periodically replaced parts/cycle

- Pick-up roller: Every 200,000 counts
- Feed roller: Every 200,000 counts

B. Procedure

1. Open the feed cover.
See P.15

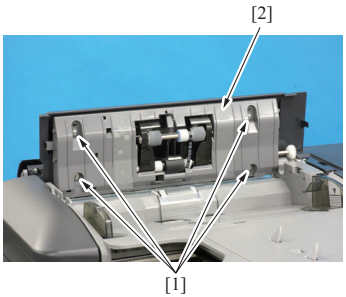

2. Remove four screws [1] and remove the cover [2].

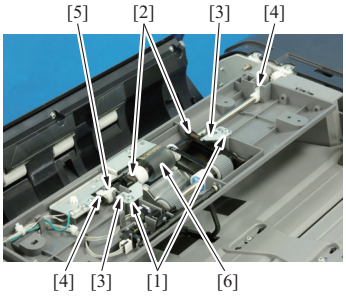

3. Remove two screws [1], two springs [2], and two pieces of fixation metal [3].
3. Remove two C-clips [4], the bearing [5], and the pick-up/feed roller assy [6].

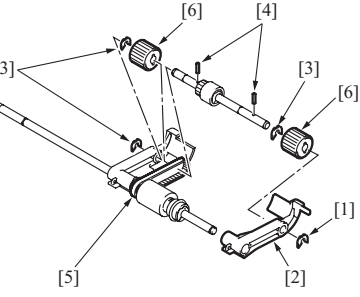

4. Remove the C-ring [1] and the lever [2].
5. Remove three C-rings [3].
6. Remove two pins [4].
7. Remove the belt [5].
8. Remove two pick-up rollers [6].

NOTE

- **Be careful not to lose the pin.**

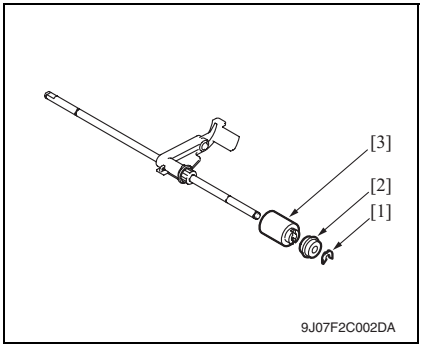

9. Remove the C-ring [1] and the bushing [2].
10. Remove the feed roller [3].

2.1.4 Replacing the separation roller

A. Periodically replaced parts/cycle

⚠1 • Separation roller: Every 200,000 counts

B. Procedure

1. Open the left cover.
2. Lift up the document feed tray.

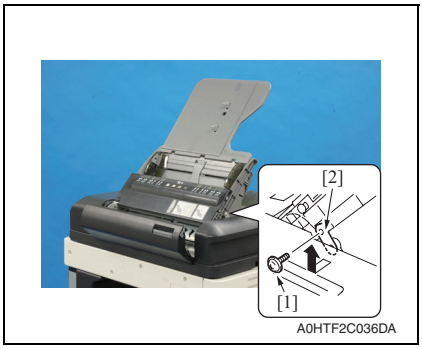

3. Remove the screw [1] and the mounting plate [2].

NOTE

- **Be sure to hold the document feed tray to prevent the tray from falling down while removing the mounting plate.**

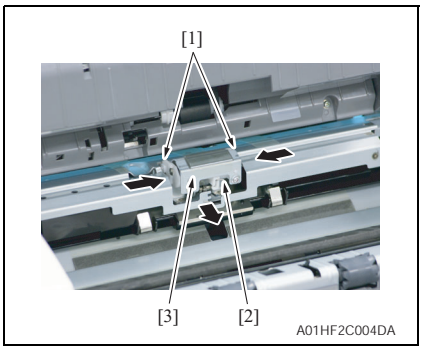

4. Hold the two sides [1] between your fingertips to unhook the spring [2] and remove the separation roller assy [3].

NOTE

- **When reinstalling the separation roller assy, be sure to hook the spring onto the assy.**

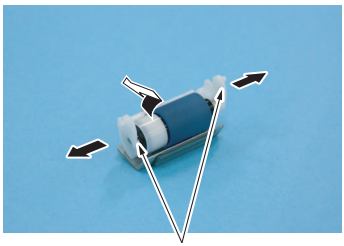

5. While opening up the holder [1], remove the shaft.

NOTE

- **Opening the holder too much can break the holder.**

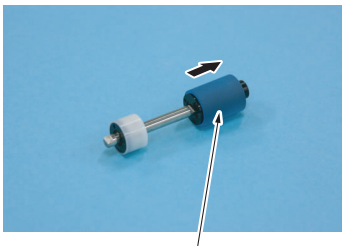

6. Remove the separation roller [1] from the shaft.

NOTE

- **Be careful not to lose the pin.**

2.2 Transport section

2.2.1 Cleaning of the miscellaneous rolls

A. Periodically cleaning parts/cycle

⚠1 • Miscellaneous rolls: Every 50,000 counts

B. Procedure

1. Lift up the document feed tray.

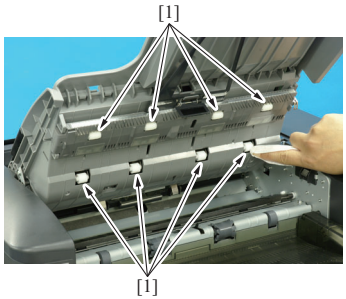

2. Using a cleaning pad with alcohol, wipe the roller [1] clean of dirt.

3. Open the left cover.

4. Using a cleaning pad with alcohol, wipe the roll [1] clean of dirt.

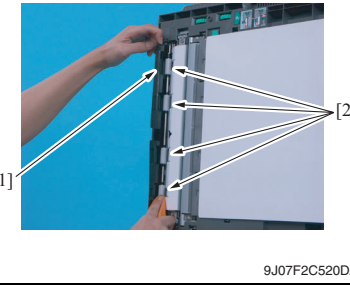

5. Open the reverse automatic document feeder.

6. While opening the before scanning film assy [1], wipe the roll [2] using a cleaning pad dampened with alcohol.

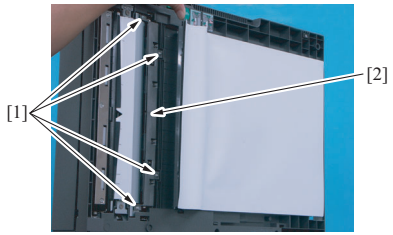

9J07F2C521DA

7. While opening the processing guide, remove four screws [1] and remove the transport roll assy [2].

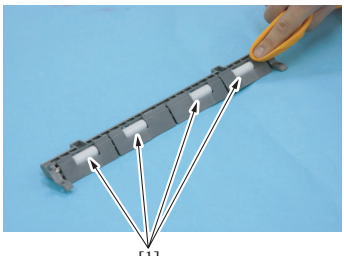

A01HF2C009DA

8. Using a cleaning pad dampened with alcohol, wipe the roll [1].

2.2.2 Cleaning of the miscellaneous rollers

A. Periodically cleaning parts/cycle

- Miscellaneous rollers: Every 50,000 counts

B. Procedure

1. Open the left cover.

A0HTF2C007DA

2. Using a cleaning pad dampened with alcohol, wipe the roller [1].

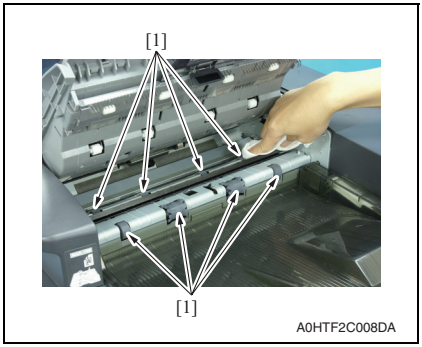

3. Lift up the document feed tray.
4. Using a cleaning pad dampened with alcohol, wipe the roller [1].

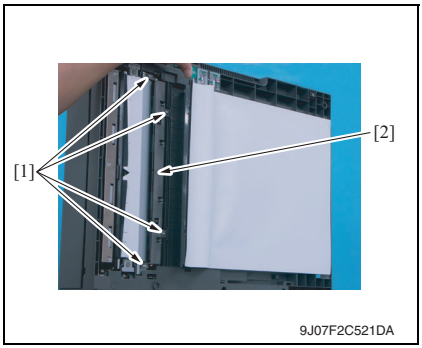

5. While opening the processing guide, remove four screws [1] and remove the transport roll assy [2].

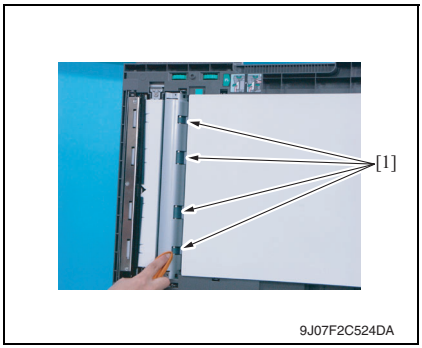

6. Using a cleaning pad dampened with alcohol, wipe the roller [1].

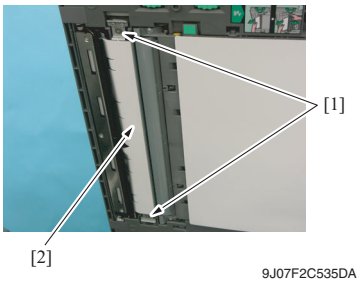

7. Remove two shoulder screws [1] and remove the scanning guide [2].

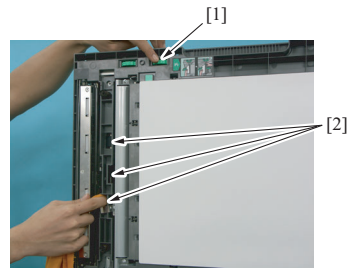

8. While turning processing knob [1], wipe the roller [2] using a cleaning pad dampened with alcohol.

2.3 Scanning section

2.3.1 Cleaning of the scanning guide

A. Periodically cleaning parts/cycle

1 • Scanning guide: Every 50,000 counts

B. Procedure

1. Open the reverse automatic document feeder.

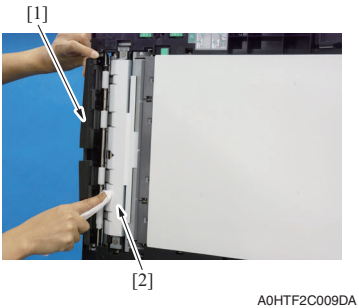

2. Open the before scanning film assy [1].

3. Using a cleaning pad dampened with alcohol, wipe the scanning guide [2] clean of dirt.

NOTE

- **Be careful not to damage the film.**

2.3.2 Cleaning of the reflective sensor section

A. Periodically cleaning parts/cycle

⚠1 • Reflective sensor section: Every 50,000 counts

B. Procedure

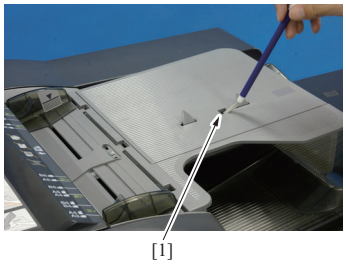

A0HTF2C010DA

1. Clean the sensor [1] using a brush or other similar tools.

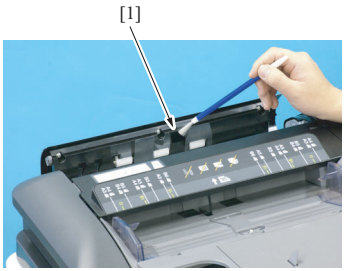

A01HF2C011DA

2. Open the left cover.
3. Clean the cloth [1] using a brush or other similar tools.

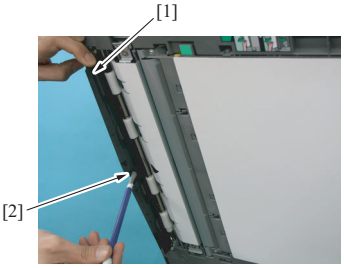

9J07F2C539DA

4. Open the reverse automatic document feeder.
5. While opening the before scanning film assy [1], clean the cloth [2] using a brush or other similar tools.

3. OTHER MAINTENANCE ITEM

3.1 Disassembly/Adjustment prohibited items

A. Paint-locked screws

NOTE

- **To prevent loose screws, a screw lock in blue or green series color is applied to the screws.**
- **The screw lock is applied to the screws that may get loose due to the vibrations and loads created by the use of machine or due to the vibrations created during transportation.**
- **If the screw lock coated screws are loosened or removed, be sure to apply a screw lock after the screws are tightened.**

B. Red-painted screws

NOTE

- **The screws which are difficult to be adjusted in the field are painted in red in order to prevent them from being removed by mistake.**
- **Do not remove or loosen any of the red-painted screws in the field. It should also be noted that, when two or more screws are used for a single part, only one representative screw may be marked with the red paint.**

C. Variable resistors on board

NOTE

- **Do not turn the variable resistors on boards for which no adjusting instructions are given in Adjustment/Setting.**

D. Removal of PWBs

⚠ CAUTION

- **When removing a circuit board or other electrical component, refer to "Handling of PWBs" and follow the corresponding removal procedures.**
- **The removal procedures given in the following omit the removal of connectors and screws securing the circuit board support or circuit board.**
- **Where it is absolutely necessary to touch the ICs and other electrical components on the board, be sure to ground your body.**

3.2 Disassembly/reassembly parts list

Section	Part name	Ref. page
Exterior parts	Feed cover	P.15
	Front cover	P.17
	Rear cover	P.17
	Document feed tray front cover	P.18
Unit	Reverse automatic document feeder	P.19
Board and etc.	DF control board (DFCB)	P.21
	Document width detection variable resistor (VR1)	P.22
Others	Switch back solenoid (SD1)	P.24
	Exit switch back solenoid (SD2)	P.25
⚠1	Reading motor (M1)	P.26
	Take-up motor (M2)	P.27
	Exit motor (M3)	P.28
	Reading roller pressure/retraction motor (M4)	P.29
	Registration motor (M7)	P.27
	Cooling fan (FM1)	P.30
	Stamp unit	P.30
	Stamp	P.32

3.3 Disassembly/reassembly procedure

3.3.1 Feed cover

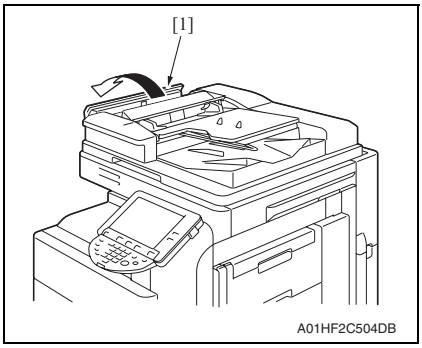

1. Open the left cover [1].

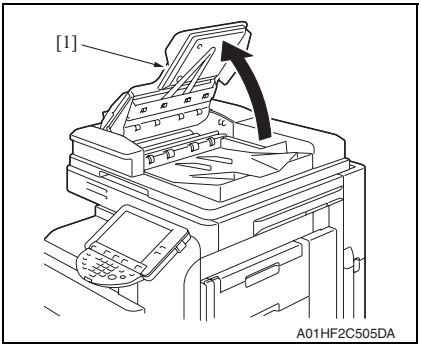

2. Lift up the document feed tray [1].

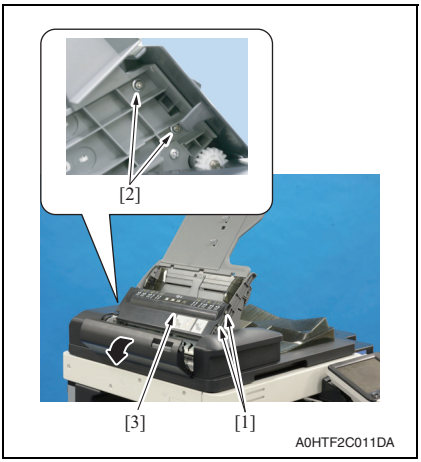

3. Remove two shoulder screws [1] and two screws [2].
4. Open the feed cover [3].

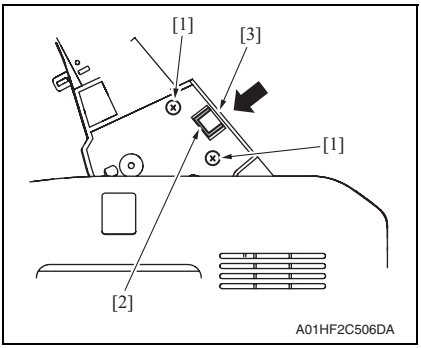

NOTE

- **In the reinstallation steps, when tightening two screws [1], press the feed cover [3] in the direction of the arrow so as not to leave a clearance between the top of the protrusion from the surface of the feed cover and the bottom of the indentation [2].**

5. Reinstall the above parts following the removal steps in reverse.

3.3.2 Front cover

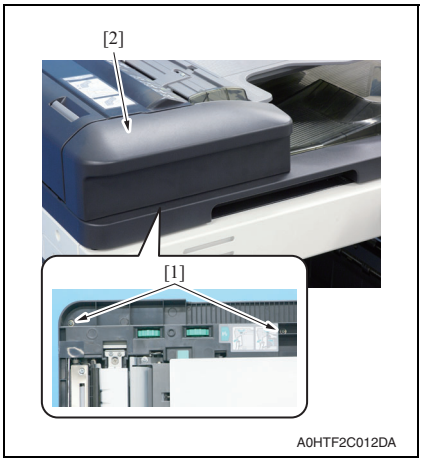

1. Open the reverse automatic document feeder.
2. Remove two screws [1] and remove the front cover [2].

3.3.3 Rear cover

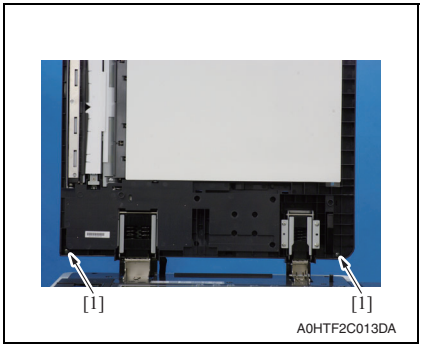

1. Open the reverse automatic document feeder.

NOTE

- **If the reverse automatic document feeder is set to be lifted up at angles up to 60 degrees due to the set position of the stopper for the hinge, change the set position to the lower side so that the reverse automatic document feeder can be opened completely.**

2. Remove two screws [1].

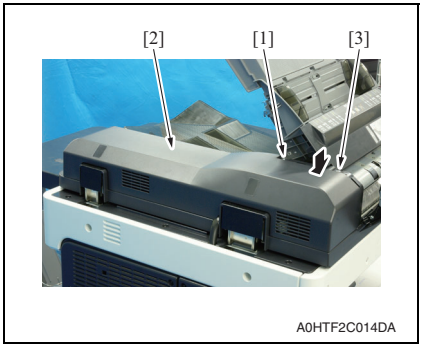

3. Open the left cover.
4. Lift up the document feed tray.
5. Remove the screw [1] and remove the rear cover [2].

NOTE

- **Be sure to press down part [3] in the picture to prevent any damage when removing the rear cover.**

A. Reinstallation procedure

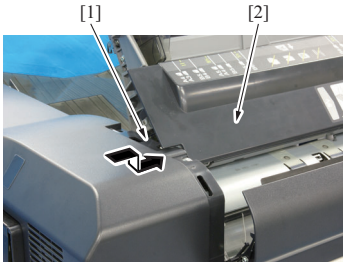

A0HTF2C015DA

1. Open the left cover.
2. Lift up the document feed tray.
3. Press down part [1] in the picture until it slides under the feed cover [2].

NOTE

- **Be careful not to damage the rear cover.**

4. Install the rear cover tightening three screws.

3.3.4 Document feed tray front cover

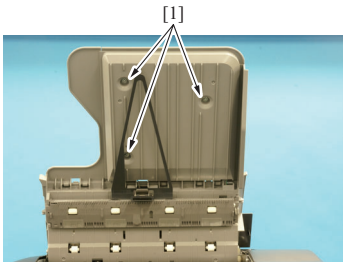

A0HTF2C016DA

1. Lift up the document feed tray.
2. Remove three screws [1].

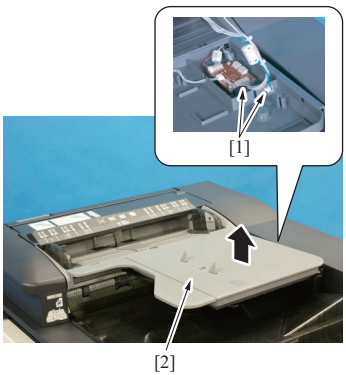

A0HTF2C017DA

3. Disconnect two connectors [1] and remove the document feed tray front cover [2].

4. Reinstall the above parts following the removal steps in reverse.

3.3.5 Reverse automatic document feeder

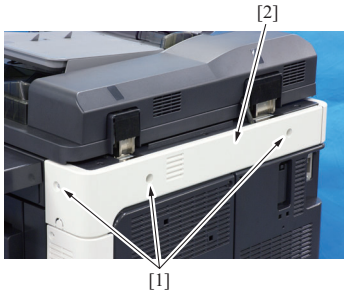

1. Remove three screws [1], and remove the scanner rear cover [2] of the main body.

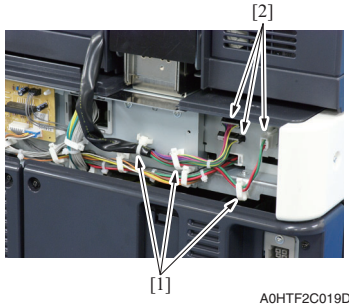

2. Remove the harness from three wire saddles [1].
3. Disconnect three connectors [2].

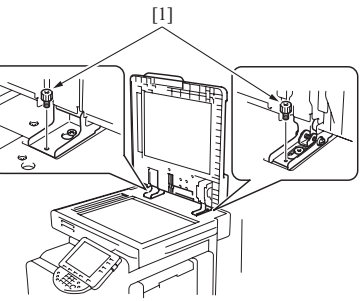

4. Open the reverse automatic document feeder.

NOTE

- **If the reverse automatic document feeder is set to be lifted up at angles up to 60 degrees due to the set position of the stopper for the hinge, change the set position to the lower side so that the reverse automatic document feeder can be opened completely.**

5. Remove two screws [1].

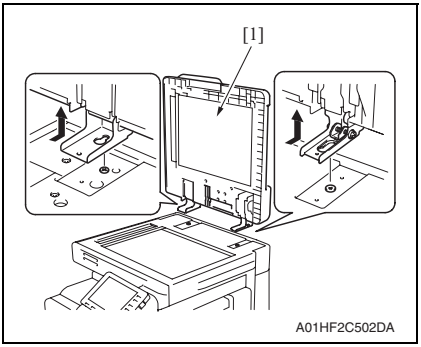

6. Remove the reverse automatic document feeder [1].

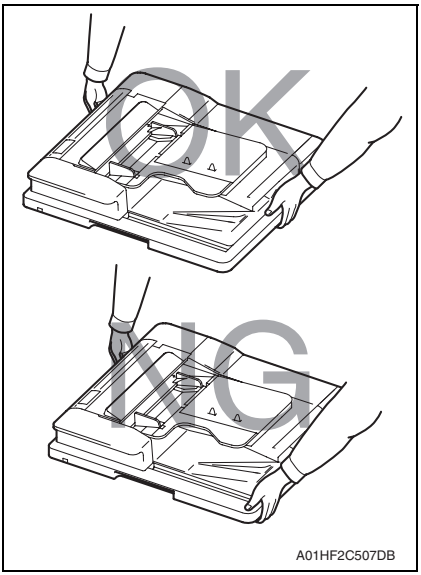

NOTE

- **When carrying the reverse automatic document feeder, be sure to hold onto the specified positions. The feeder main body can be distorted if held at inappropriate positions.**

7. Reinstall the above parts following the removal steps in reverse.

3.3.6 DF control board (DFCB)

1. Remove the rear cover.
See P.17

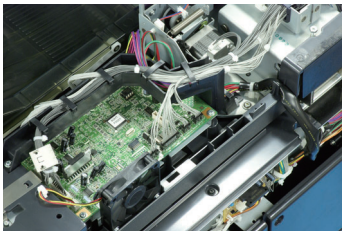

A0HTF2C020DA

2. Disconnect all the fifteen connectors from the DF control board.

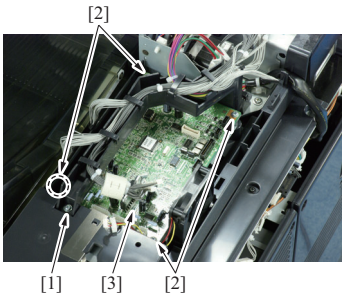

A0HTF2C021DA

3. Remove the screw [1].
4. Remove four screws [2] and remove the DF control board [3].

NOTE

- **Be sure to perform the following operation when the DF control board is replaced.**

5. Replace the EEPROM.
6. Upgrade the firmware.
See P.231 of the main body service manual.

7. Reinstall the above parts following the removal steps in reverse.

3.3.7 Document width detection variable resistor (VR1)

A. Remove procedure

1. Open the feed cover.
See P.15

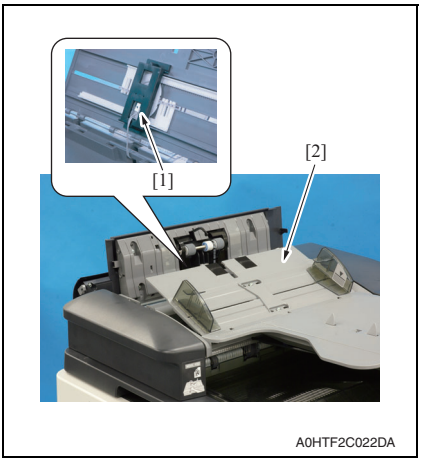

2. Disconnect the connector [1] and remove the document width detection variable resistor cover [2].

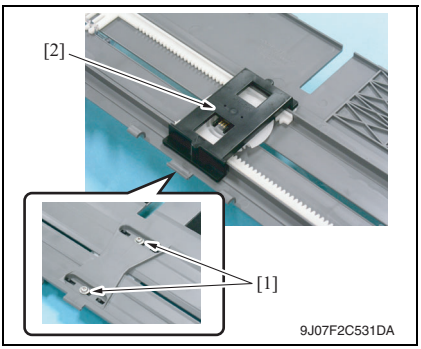

3. Remove two screws [1] and remove the document width detection variable resistor [2].

B. Reinstallation procedure

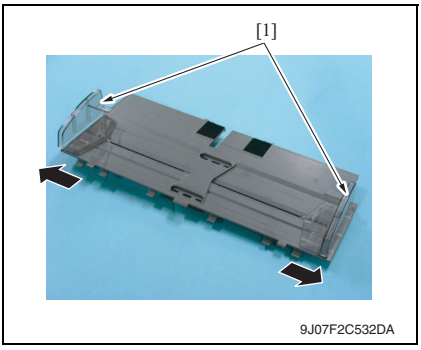

1. Open the side edge stop [1] of the original feed tray.

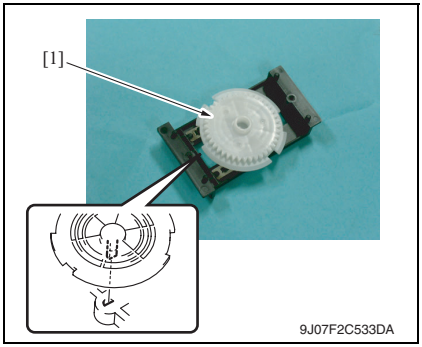

2. Reinstall the gear [1].

NOTE

- **Note the mounting position of the gear and the document width detection variable resistor.**

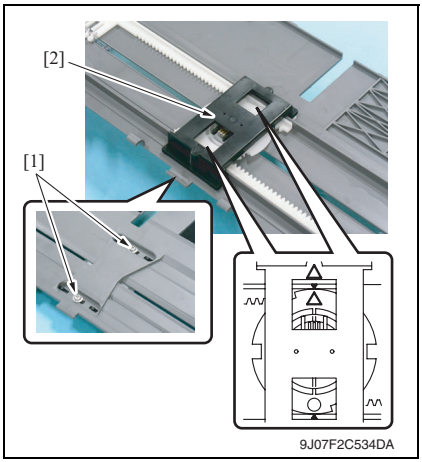

3. Use two screws [1] to install the document width detection variable resistor [2].

NOTE

- **Install the gear and rack gear by aligning the arrows.**

4. Connect the connector.

5. Install the document width detection variable resistor cover and turn on the main power switch.

NOTE

- **Be sure to perform the following operation when the document width detection variable resistor is replaced.**

6. Perform document width detection adjustment.

7. Turn OFF the main power switch and turn it ON again and check whether size detection operates normally.

3.3.8 Switch back solenoid (SD1)

1. Remove the rear cover.
See P.17

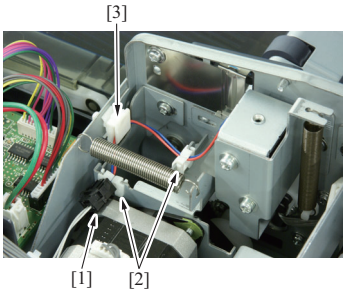

A0HTF2C023DA

2. Disconnect the connector [1].
3. Remove the harness from two edge covers [2] and the wire saddle [3].

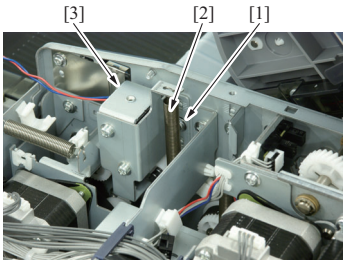

A0HTF2C024DA

4. Remove the screw [1] and the spring [2], and remove the switch back solenoid [3].

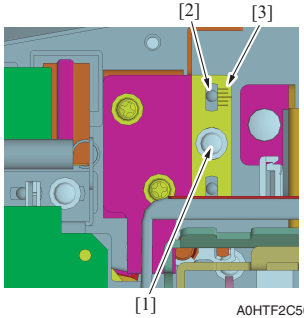

A0HTF2C500DA

5. Reinstall the above parts following the removal steps in reverse.

NOTE

- **When installing the screw [1], align the dowel [2] with the scale [3] with which the dowel was aligned before the screw was removed and then tighten the screw.**

3.3.9 Exit switch back solenoid (SD2)

1. Remove the rear cover.
See P.17
2. Remove the take-up motor.
See P.27
3. Remove the registration motor.
See P.27

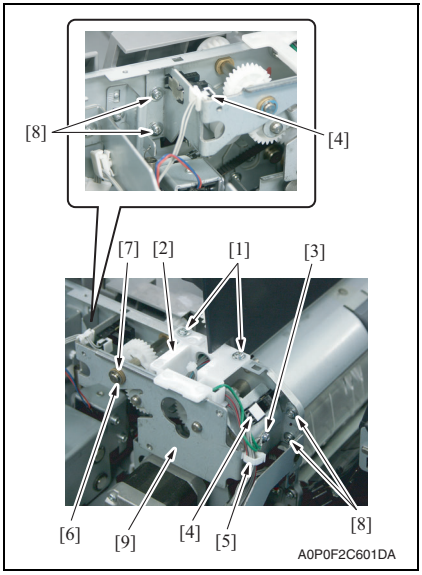

4. Remove two screws [1], and remove the harness guide [2].
5. Remove the screw [3], and remove the ground terminal.
6. Disconnect two connectors [4] of the sensor.
7. Remove the harness from the wire saddles [5].
8. Remove the E-ring [6] and bearing [7].
9. Remove four screws [8], and remove the plate [9].

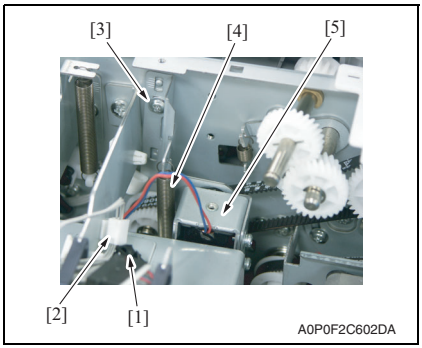

10. Disconnect the connector [1].
11. Remove the harness from the wire saddles [2].
12. Remove the screw [3] and spring [4], and remove the exit switch back solenoid [5].

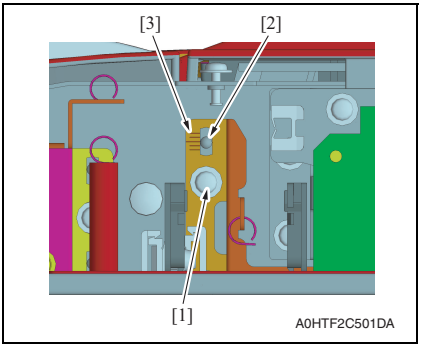

13. Reinstall the above parts following the removal steps in reverse.

NOTE

- **When installing the screw [1], align the dowel [2] with the scale [3] with which the dowel was aligned before the screw was removed and then tighten the screw.**

3.3.10 Reading motor (M1)

1. Remove the rear cover.
See P.17
2. Remove the take-up motor.
See P.27
3. Remove the registration motor.
See P.27

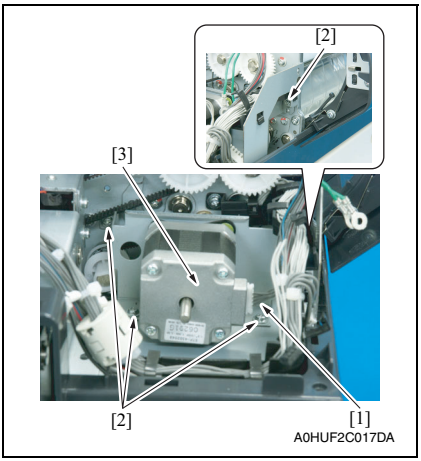

4. Disconnect the connector [1].
5. Remove four screws [2], and remove the reading motor assy [3].

3.3.11 Take-up motor (M2)

1. Remove the rear cover.
See P.17

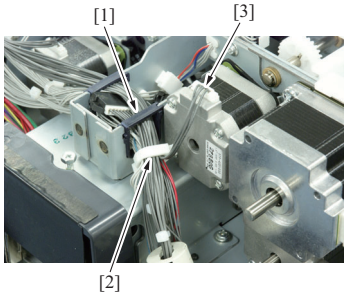

A0HTF2C025DA

2. Remove two screws [1], and remove the harness guide [2].
3. Disconnect the connector [3].

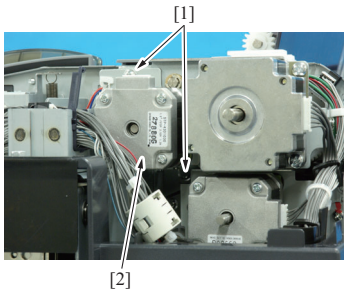

A0HTF2C026DA

4. Remove two screws [1], and remove the take-up motor [2].
5. Reinstall the above parts following the removal steps in reverse.

3.3.12 Registration motor (M7)

1. Remove the rear cover.
See P.17

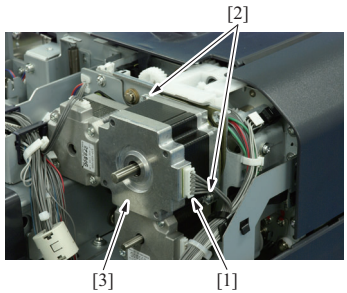

A0HTF2C027DA

2. Disconnect the connector [1].
3. Remove two screws [2], and remove the registration motor [3].
4. Reinstall the above parts following the removal steps in reverse.

3.3.13 Exit motor (M3)

1. Remove the rear cover.
See P.17

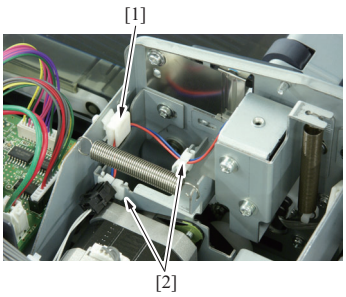

2. Remove the harness from the wire saddle [1] and two edge covers [2].
3. Disconnect the connector [1].

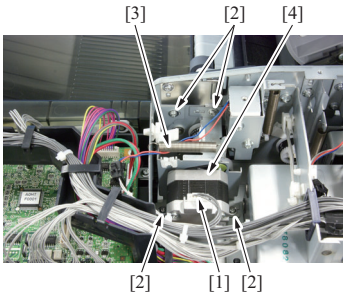

4. Disconnect the connector [1].
5. Remove four screws [2] and the spring [3], and remove the exit motor assy [4].

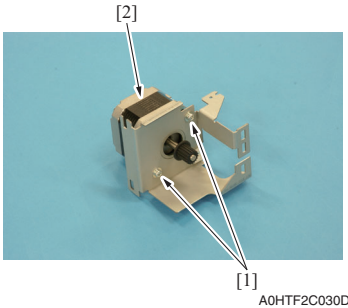

6. Remove two screws [1], and remove the exit motor [2].

7. Reinstall the above parts following the removal steps in reverse.

3.3.14 Reading roller pressure/retraction motor (M4)

1. Remove the front cover.
See P.17

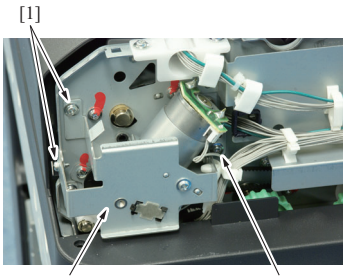

A0HTF2C031DA

2. Remove three screws [1], and remove the drive assy [2].

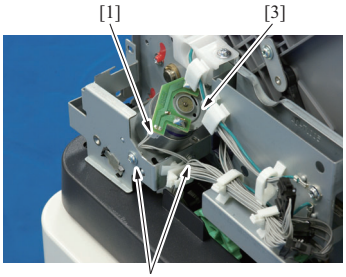

A0HTF2C032DA

3. Disconnect the connector [1].
4. Remove two screws [2], and reading roller pressure/retraction motor assy [3].

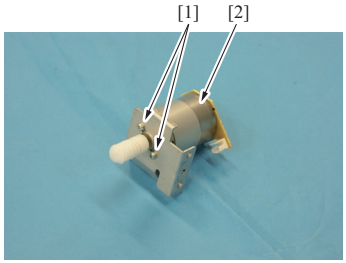

A0HTF2C033DA

5. Remove two screws [1], and remove the reading roller pressure/retraction motor [2].

6. Reinstall the above parts following the removal steps in reverse.

3.3.15 Cooling fan (FM1)

1. Remove the DF control board.
See P.21

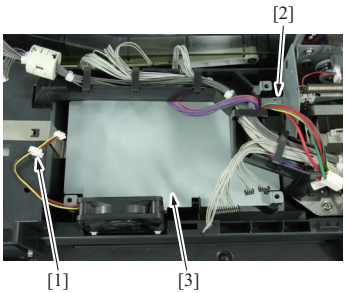

2. Remove the harness from the wire saddle [1].
3. Remove the screw [2], and remove the cooling fan mounting plate [3].

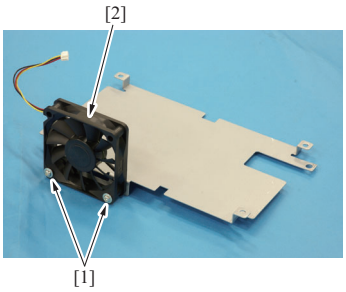

4. Remove two screws [1], and remove the cooling fan [2].

5. Reinstall the above parts following the removal steps in reverse.

3.3.16 Replacing the stamp unit

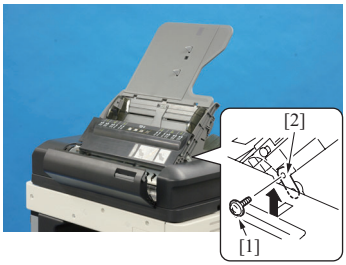

1. Open the left cover.
2. Lift up the document feed tray.
3. Remove the screw [1] and the mounting plate [2].

NOTE

- **Be sure to hold the document feed tray to prevent the tray from falling down while removing the mounting plate.**

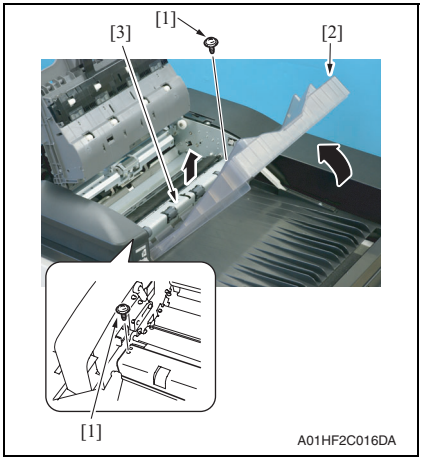

4. Remove two screws [1] and remove the plate cover [3] while holding up the exit tray [2].

NOTE

- **Take care not to raise the exit tray too much. The stopper may come off.**

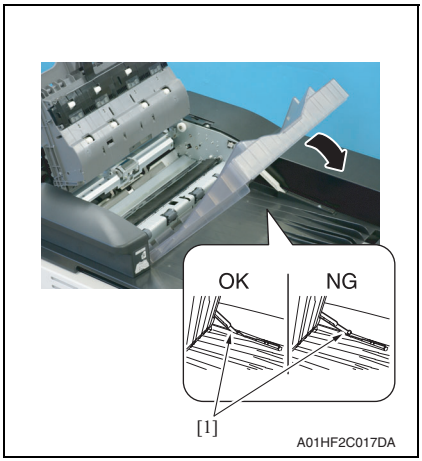

NOTE

- **When lowering the exit tray, check that the stopper [1] fits under the plate spring.**

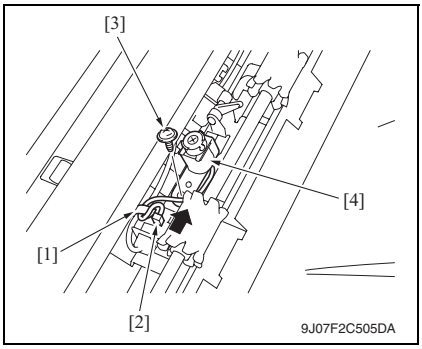

5. Remove the cord clamp [1] and disconnect the connector [2].

6. Remove the screw [3] and remove the stamp unit [4].

3.3.17 Replacing the stamp

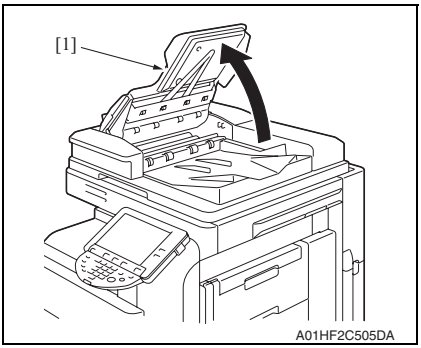

1. Lift up the document feed tray [1].

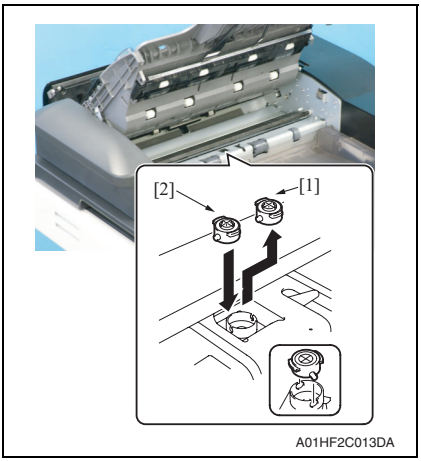

2. Remove the used stamp [1] and install the new stamp of replacement [2].

NOTE

- **Align the round pin of the stamp with the slit in the stamp unit side.**

4. SERVICE TOOL

4.1 CE tool list

Tool name	Shape	Personnel	Parts No.	Remarks
ADF reading chart	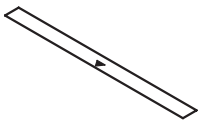 9J07F2C003DA	1	9J06 PJG1 XX	

ADJUSTMENT/SETTING

5. HOW TO USE THE ADJUSTMENT SECTION

- "Adjustment/Setting" contains detailed information on the adjustment items and procedures for this machine.
- Throughout this "Adjustment/Setting," the default settings are indicated by " ".

Advance checks

Before attempting to solve the customer problem, the following advance checks must be made. Check to see if:

- The power supply voltage meets the specifications.
- The power supply is properly grounded.
- The machine shares the power supply with any other machine that draws large current intermittently (e.g., elevator and air conditioner that generate electric noise).
- The installation site is environmentally appropriate: high temperature, high humidity, direct sunlight, ventilation, etc.; levelness of the installation site.
- The original has a problem that may cause a defective image.
- The density is properly selected.
- The original glass, slit glass, or related part is dirty.
- Correct paper is being used for printing.
- The units, parts, and supplies used for printing (developer, PC drum, etc.) are properly replenished and replaced when they reach the end of their useful service life.
- Toner is not running out.

⚠ CAUTION

- **Be sure to unplug the power cord of the machine before starting the service job procedures.**
- **If it is unavoidably necessary to service the machine with its power turned ON, use utmost care not to be caught in the scanner cables or gears of the exposure unit.**
- **Special care should be used when handling the fusing unit which can be extremely hot.**
- **The developing unit has a strong magnetic field. Keep watches and measuring instruments away from it.**
- **Take care not to damage the PC drum with a tool or similar device.**
- **Do not touch IC pins with bare hands.**

6. MECHANICAL ADJUSTMENT

6.1 Mechanical adjustment of the original document feed section

6.1.1 Adjusting the height

Make this adjustment after any of the following procedures has been performed.
- **When the reverse automatic document feeder has been reinstalled.**

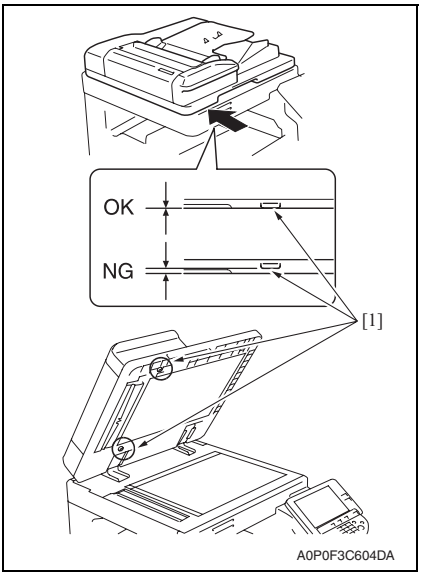

1. Check the clearance between the upper face of scanner and the protrusion [1] on the reverse automatic document feeder side (2 spots, front/back).

NOTE
- **There must be no clearance between the protrusion [1] on the reverse automatic document feeder and the upper face of scanner.**

2. If there is any clearance, the following adjustment is needed.

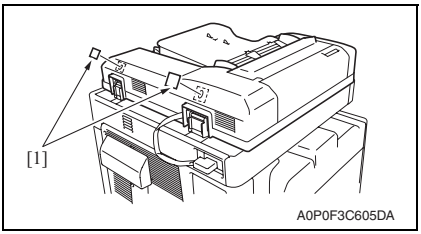

3. Remove the label [1].

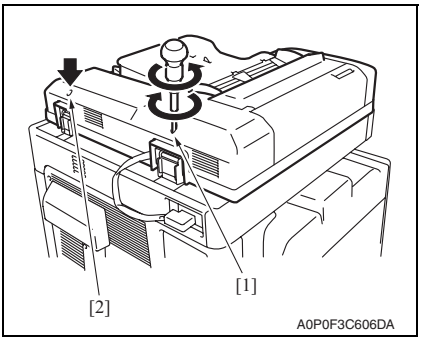

4. Remove the clearance by turning the adjusting screw [1].
   Clockwise rotation: Lifting up the rear side
   Counterclockwise rotation: Lowering the rear side
5. Use the adjusting screw [2] when further adjustment is needed.
   Clockwise rotation: Lifting up the rear side
   Counterclockwise rotation: Lowering the rear side
6. Affix again the labels removed in step 3.

6.1.2 Adjusting skew feed

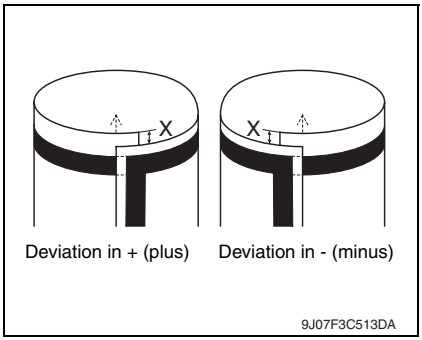

1. Check how the edges of the chart are misaligned.
   The amount of the deviation of the chart will be X.

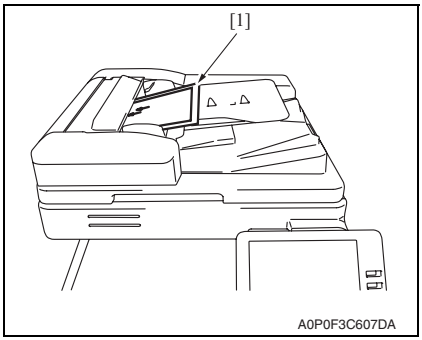

2. Place the chart [1] in the document feed tray (with the side having an arrow facing up).

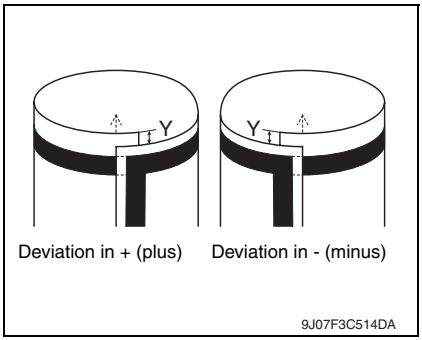

3. Make copies 5 times repeatedly in single side mode.
4. Fold all 5 sample copies as illustrated and check for any deviation.
   Deviation on the sample will be Y.
5. Obtain the difference between the deviation of the chart and the deviation of the sample.
   Difference of the deviation = Y - X
   Specifications: 0 ± 2 mm
6. If the difference of the deviation does not fall within the specified range, perform the following adjustment.

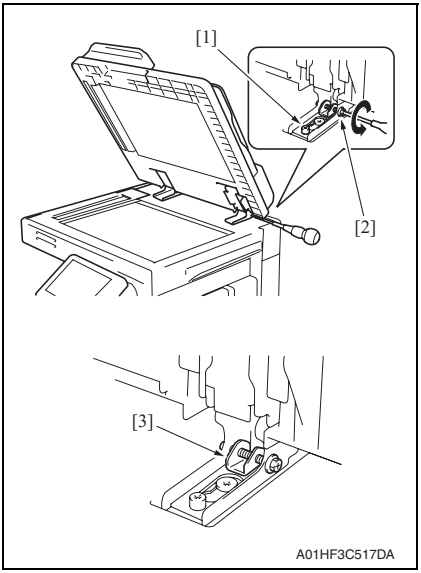

7. Loosen the mounting screw [1] on the right hinge viewed from the front.
8. When the difference of the deviation is + (plus), turn the screw [2] counterclockwise to adjust.

NOTE

- **When turning the screw, be sure not to raise the reverse automatic document feeder until in an upright position.**
- **When the adjusting plate [3] is set far left, do not tighten any further.**
- **To prevent the adjustment screw [2] breakage, be sure to follow the above instructions.**

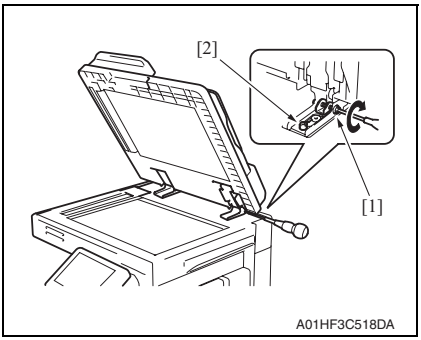

9. When the difference of the deviation is - (minus), turn the screw [1] clockwise to adjust.
10. After the adjustment is completed, tighten the mounting screw [2] on right side hinge securely with screwdriver.

KONICA MINOLTA

SERVICE MANUAL

FIELD SERVICE

LU-301

2009.07

KONICA MINOLTA BUSINESS TECHNOLOGIES, INC. Ver. 2.0

Revision history

After publication of this service manual, the parts and mechanism may be subject to change for improvement of their performance.
Therefore, the descriptions given in this service manual may not coincide with the actual machine.

When any change has been made to the descriptions in the service manual, a revised version will be issued with a revision mark added as required.

Revision mark:

- To indicate clearly a section revised, △1 is shown at the left margin of the revised section.
  The number inside △1 represents the number of times the revision has been made.

- To indicate clearly a page that contains the revision, ▲1 is shown near the page number of the corresponding page.
  The number inside ▲1 represents the number of times the revision has been made.

NOTE

Revision marks shown in a page are restricted only to the latest ones with the old ones deleted.

- When a page revised in Ver. 2.0 has been changed in Ver. 3.0:
  The revision marks for Ver. 3.0 only are shown with those for Ver. 2.0 deleted.
- When a page revised in Ver. 2.0 has not been changed in Ver. 3.0:
  The revision marks for Ver. 2.0 are left as they are.

Date	Service manual Ver.	Revision mark	Descriptions of revision
2009/07	2.0	△1	—
2009/01	1.0	—	Issue of the first edition

CONTENTS

LU-301

OUTLINE

1. PRODUCT SPECIFICATIONS 1

MAINTENANCE

2. PERIODICAL MAINTENANCE PROCEDURE 3
2.1 Paper feed section 3
2.1.1 Replacing the pick-up roller 3
2.1.2 Replacing the feed roller 4
2.1.3 Replacing the separation roller 5
3. OTHER MAINTENANCE ITEM 6
3.1 Disassembly/Adjustment prohibited items 6
3.2 Disassembly/reassembly parts list 7
3.3 Cleaning parts list 7
3.4 Disassembly/reassembly procedure 8
3.4.1 Large capacity unit 8
3.4.2 Upper door 10
3.4.3 Right cover 11
3.4.4 Front cover 11
3.4.5 Rear cover 12
3.4.6 Feed cover 13
3.4.7 Lift wire 14
3.4.8 LU drive board (LUDB) 24
3.4.9 Lift-up motor (M1) 25
3.4.10 Dehumidification heater (DH) 25
3.5 Cleaning point 26
3.5.1 Pick-up roller 26
3.5.2 Feed roller 26
3.5.3 Separation roller 27
3.5.4 Transport roller 27

ADJUSTMENT/SETTING

4. HOW TO USE THE ADJUSTMENT SECTION 29
5. MECHANICAL ADJUSTMENT 30
5.1 Mechanical adjustment of the paper feed section 30

5.1.1 Centering adjustment of the LCT 30
5.1.2 Pick-up roller load adjustment of the LCT 32

OUTLINE

1. PRODUCT SPECIFICATIONS

A. Type

Name	3,000 sheets Large Capacity Unit
Type	External option attached to the right side of the main body
Document alignment	Center

B. Paper type

Type	Size	Weight	Capacity
Plain paper	A4, 8 $^{1}/_{2}$ x 11	64 g/m^2 to 90 g/m^2	3,000 sheets
Thick paper 1		91 g/m^2 to 120 g/m^2	2,500 sheets *2
Thick paper 1+		121 g/m^2 to 157 g/m^2	1,750 sheets *2
Thick paper 2		158 g/m^2 to 209 g/m^2	1,550 sheets *2
Thick paper 3		210 g/m^2 to 256 g/m^2	1,300 sheets *1 *2

*1: Images are out of guarantee.
*2: Excluding damp paper, curled paper, and recycled paper.

C. Machine specifications

Power requirements	DC 24 V, DC 5 V, DC 3.3 V (supplied from the main body)
Max. power consumption	23 W or less
Dimensions	367 mm (W) x 528 mm (D) x 405 mm (H) 14.45 inch (W) x 20.79 inch (D) x 15.94 inch (H)
Weight	18.0 kg (39.68 lb)

D. Operating environment

- Conforms to the operating environment of the main body.

NOTE

- **These specifications are subject to change without notice.**

Blank Page

MAINTENANCE

2. PERIODICAL MAINTENANCE PROCEDURE

2.1 Paper feed section

2.1.1 Replacing the pick-up roller

A. Periodically replaced parts/cycle

- Pick-up roller: Every 300,000 counts

B. Procedure

1. Open the upper door.

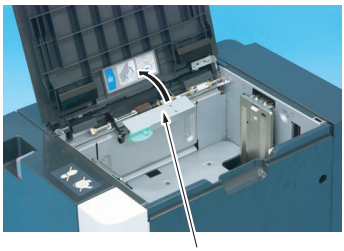

2. Move the feed roller [1] up.

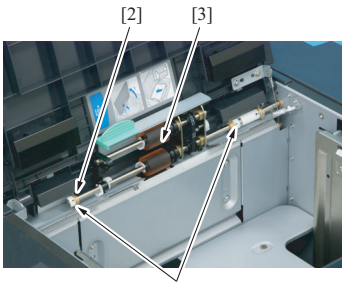

3. Remove two C-clips [1], the bushing [2] and remove the feed roller assy [3].

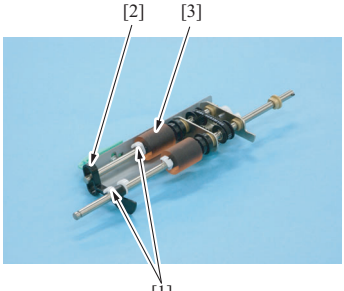

4. Remove two C-clips [1], the actuator [2] and remove the pick-up roller [3].
5. Reinstall the above parts following the removal steps in reverse.

2.1.2 Replacing the feed roller

A. Periodically replaced parts/cycle

- Feed roller: Every 300,000 counts

B. Procedure

1. Open the upper door.

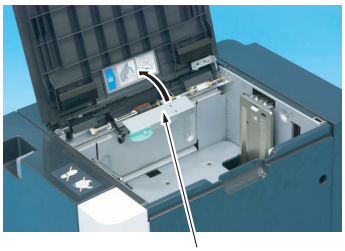

2. Move the feed roller [1] up.

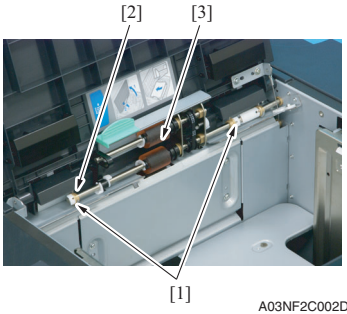

3. Remove two C-clips [1], the bushing [2] and remove the feed roller assy [3].

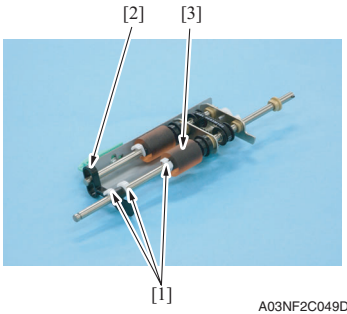

4. Remove three C-clips [1], the actuator [2] and remove the feed roller [3].

5. Reinstall the above parts following the removal steps in reverse.

2.1.3 Replacing the separation roller

A. Periodically replaced parts/cycle

- Separation roller: Every 300,000 counts

B. Procedure

1. Open the upper door.

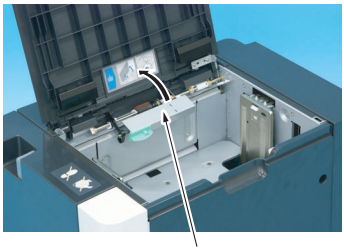

2. Move the feed roller [1] up.

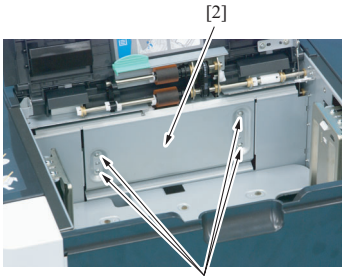

3. Remove four screws [1] and remove the sheet metal [2].

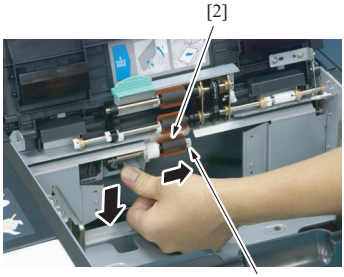

4. Remove the C-clip [1] while pressing the separation roller down to remove the separation roller [2].

5. Reinstall the above parts following the removal steps in reverse.

3. OTHER MAINTENANCE ITEM

3.1 Disassembly/Adjustment prohibited items

A. Paint-locked screws

NOTE

- **To prevent loose screws, a screw lock in blue or green series color is applied to the screws.**
- **The screw lock is applied to the screws that may get loose due to the vibrations and loads created by the use of machine or due to the vibrations created during transportation.**
- **If the screw lock coated screws are loosened or removed, be sure to apply a screw lock after the screws are tightened.**

B. Red-painted screws

NOTE

- **The screws which are difficult to be adjusted in the field are painted in red in order to prevent them from being removed by mistake.**
- **Do not remove or loosen any of the red-painted screws in the field. It should also be noted that, when two or more screws are used for a single part, only one representative screw may be marked with the red paint.**

C. Variable resistors on board

NOTE

- **Do not turn the variable resistors on boards for which no adjusting instructions are given in Adjustment/Setting.**

D. Removal of PWBs

⚠ CAUTION

- **When removing a circuit board or other electrical component, refer to "Handling of PWBs" and follow the corresponding removal procedures.**
- **The removal procedures given in the following omit the removal of connectors and screws securing the circuit board support or circuit board.**
- **Where it is absolutely necessary to touch the ICs and other electrical components on the board, be sure to ground your body.**

3.2 Disassembly/reassembly parts list

Section	Part name	Ref. page
Unit	Large capacity unit	P.8
Exterior parts	Upper door	P.10
	Right cover	P.11
	Front cover	P.11
	Rear cover	P.12
	Feed cover	P.13
Up/down section	Lift wire	P.14
Board and etc.	LU drive board (LUDB)	P.24
Others	Lift-up motor (M1)	P.25
	Dehumidification heater (DH)	P.25

3.3 Cleaning parts list

Section	Part name	Ref. page
Feed section	Pick-up roller	P.26
	Feed roller	P.26
	Separation roller	P.27
Transport section	Transport roller	P.27

3.4 Disassembly/reassembly procedure

3.4.1 Large capacity unit

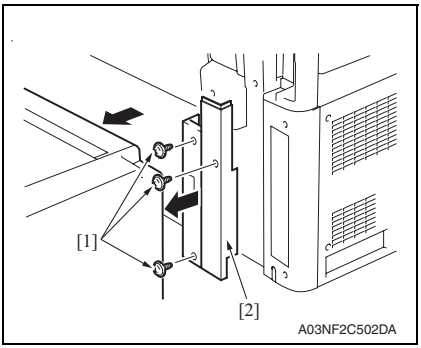

1. Remove the LCT from the main body to remove three screws [1]. Remove the lower right cover/4 [2] from the main body.

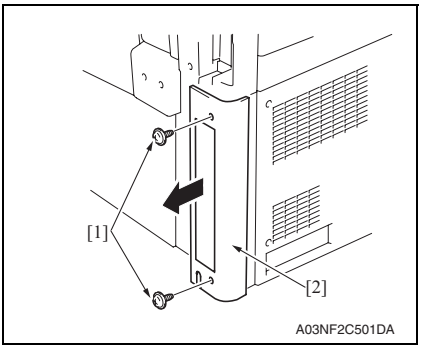

2. Remove two screws [1] to remove the lower right cover/2 [2] from the main body.

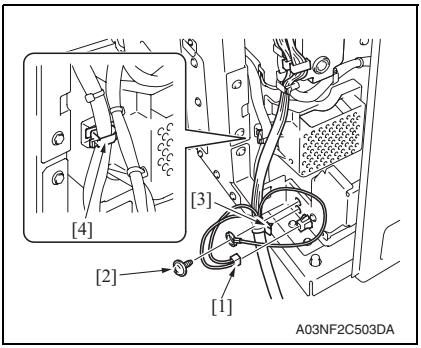

3. Disconnect the connector [1], the screw on the earth wire [2], and the cord clamp [3].

NOTE

- **When reinstalling the harness, be sure not to let the harness be inserted in the wire saddle [4].**

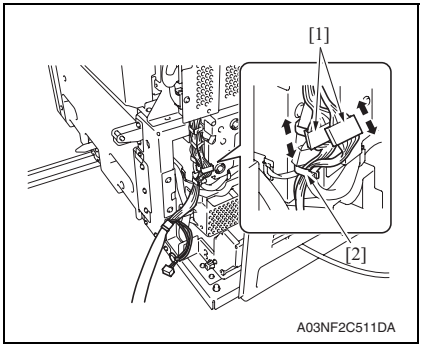

4. Disconnect each of the two connectors [1] and remove the harness from the wire saddle [2].

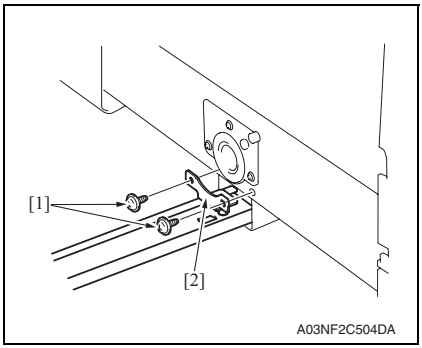

5. Remove two screws [1] and remove the mounting plate [2].

6. Reinstall the above parts following the removal steps in reverse.

3.4.2 Upper door

1. Remove the right cover.
See P.11
2. Remove the front cover.
See P.11
3. Remove the rear cover.
See P.12
4. Remove the feed cover.
See P.13
5. Open the upper door.

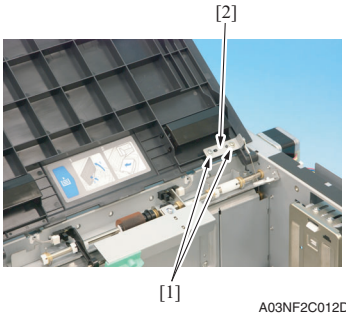

6. Remove two screws [1] and remove the fixed sheet metal [2].

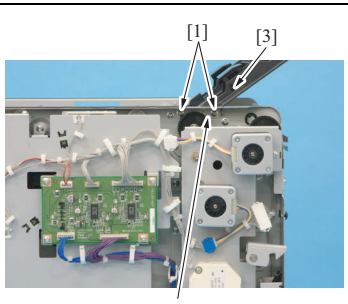

7. Remove two screws [1], the sheet metal [2] and remove the upper door [3].

8. Reinstall the above parts following the removal steps in reverse.

3.4.3 Right cover

1. Open the upper door.

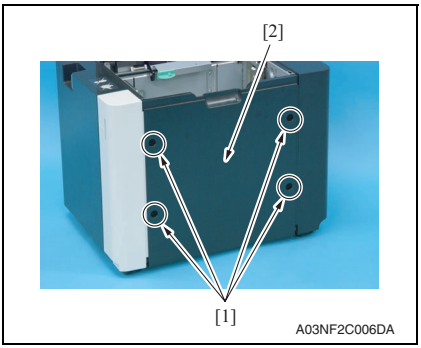

2. Remove four screws [1] and remove the right cover [2].

3.4.4 Front cover

1. Remove the right cover.
See P.11

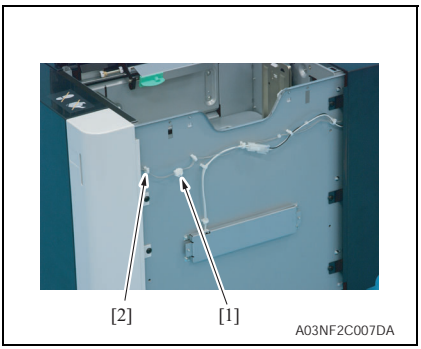

2. Remove the harness from the connector [1] and the wire saddle [2].

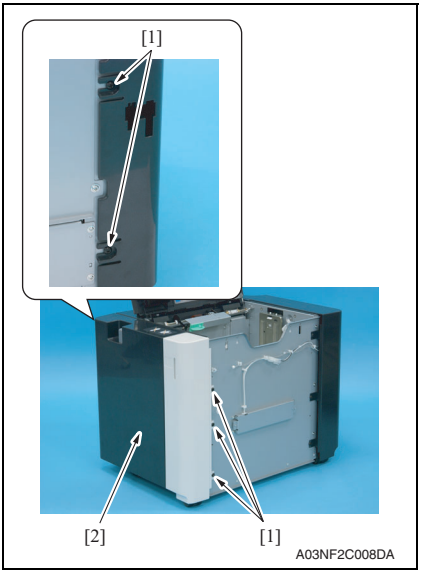

3. Loosen five screws [1] and remove the front cover [2].

3.4.5 Rear cover

1. Remove the right cover.
See P.11

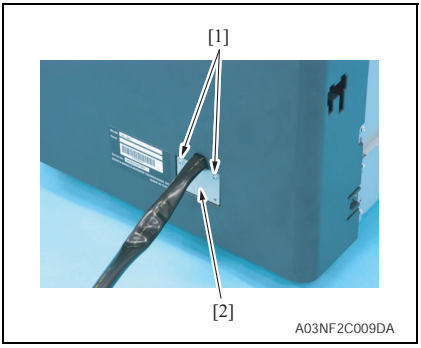

2. Remove two screws [1] and remove the sheet metal [2].

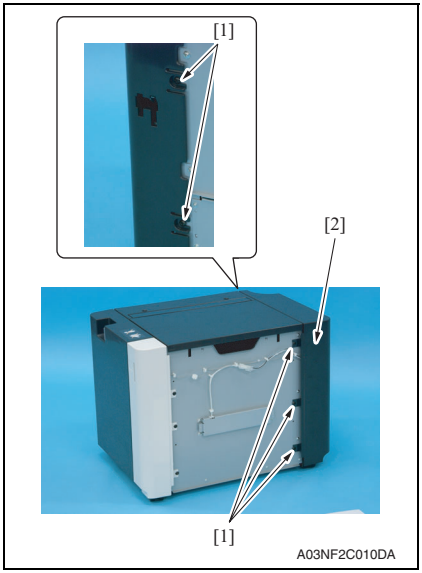

3. Loosen five screws [1] and remove the rear cover [2].

3.4.6 Feed cover

1. Remove the right cover.
See P.11
2. Remove the front cover.
See P.11
3. Remove the rear cover.
See P.12

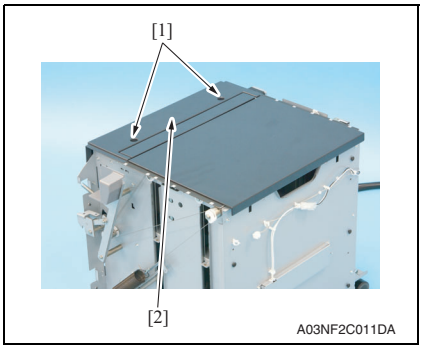

4. Remove two screws [1] and remove the feed cover [2].

3.4.7 Lift wire

A. Removal

1. Remove the right cover.
See P.11
2. Remove the front cover.
See P.11
3. Remove the rear cover.
See P.12

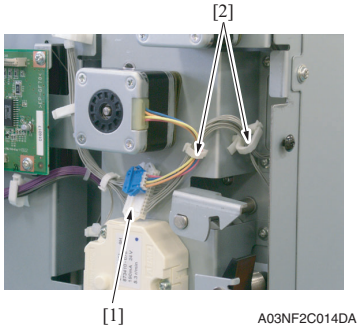

4. Remove the harness from the connector [1] and two wire saddles [2] on the rear side.

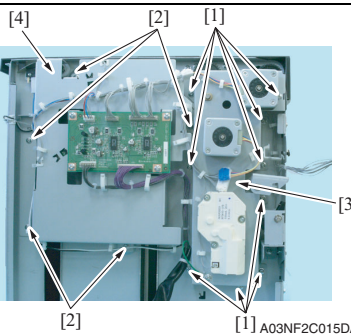

5. Remove nine screws [1] and five screws [2] to remove the motor assy [3] and the drive board assy [4].

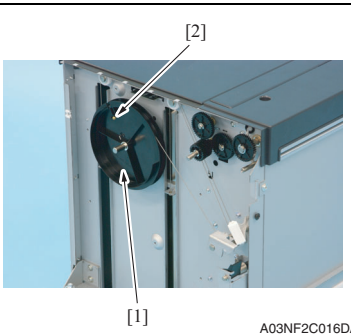

6. Remove the lift wire/L [2] from the rotation plate [1].

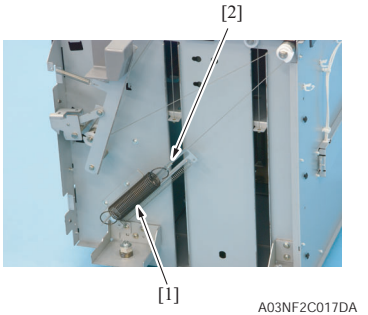

7. Remove the auxiliary wire [2] from the spring [1] on the front side.

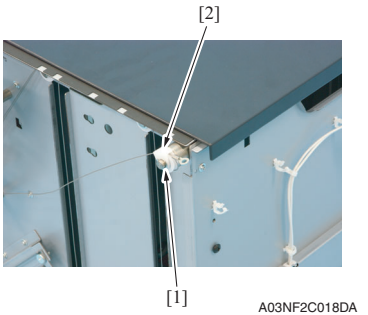

8. Remove the E-ring [1] on the front side to remove the wire holding jig [2].

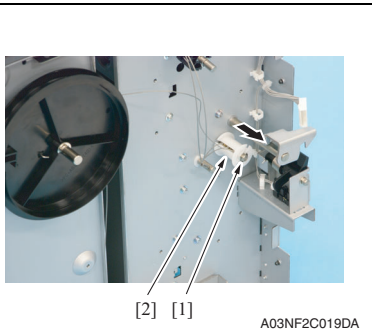

9. Remove the E-ring [1] on the rear side to remove the driving pulley [2].

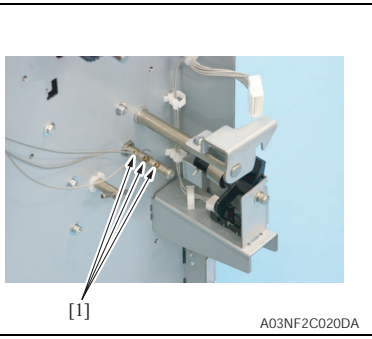

10. Pull out three lift wires [1].

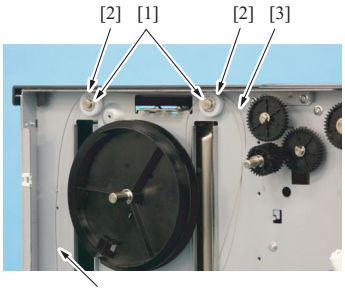

11. Remove two E-rings [1] and two wire pulleys [2] to remove the lift wire/S [3] and the lift wire/L [4].

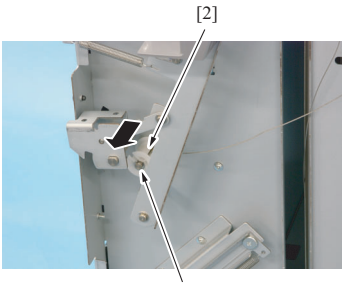

12. Remove the E-ring [1] on the front side to remove the driving pulley [2].

13. Pull out the auxiliary wire [1] and two lift wires [2].

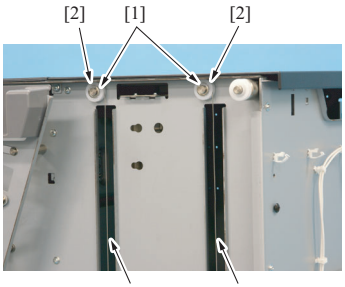

14. Remove two E-rings [1] and two wire pulleys [2] to remove the lift wire/S [3] and the lift wire/L [4].

B. Reinstall

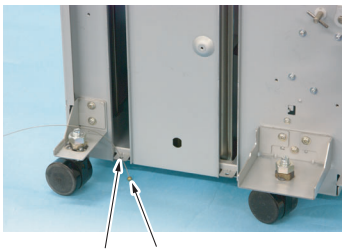

1. Insert the lift wire/L [2] to the left hole [1] on the rear face.

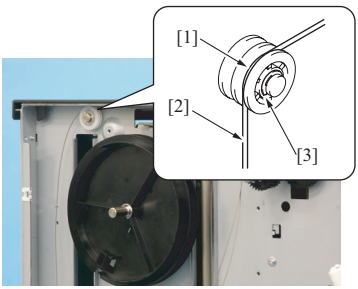

2. Set the lift wire/L [2] to the near side groove [1] on the wire pulley, and secure it with the E-ring [3].

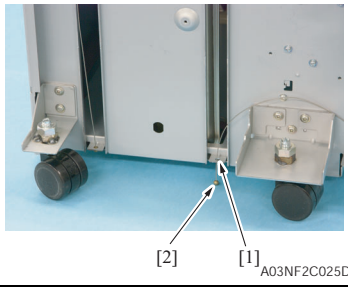

3. Insert the lift wire/S [2] to the right hole [1] on the rear face.

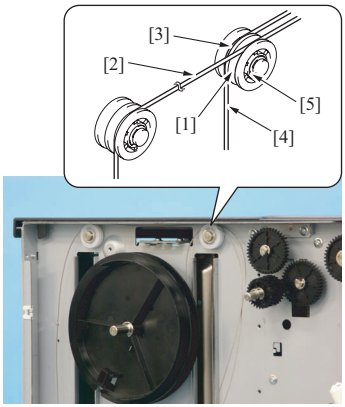

A03NF2C506DA

4. Set the lift wire/L [2] to the near side groove [1] on the wire pulley, and set the lift wire/S [4] to the far side groove [3] and secure them with the E-ring [5].

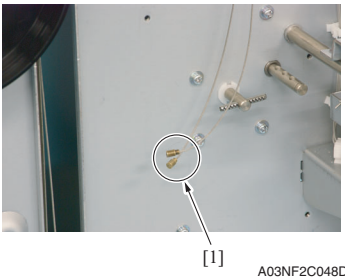

A03NF2C048DA

NOTE

- **They are properly fixed if both edges of the wire [1] are at the same position.**

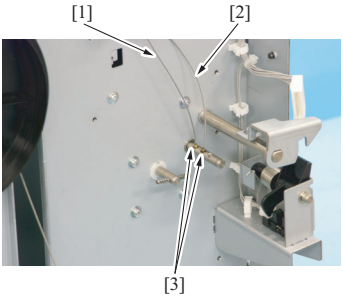

A03NF2C026DA

5. Take the edges of the lift wire/S [1] and the lift wire/L [2] and set them to the holes on the shaft [3].

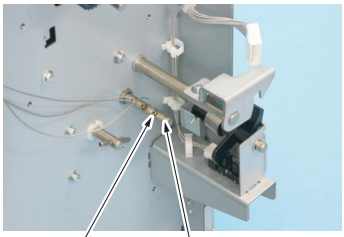

A03NF2C051DA

6. Take the edge of the lift wire/L [1] and set it to the hole on the shaft [2].

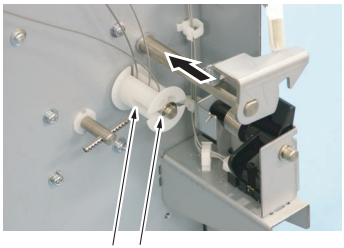

A03NF2C027DA

7. Mount the driving pulley [1] and secure it with the E-ring [2].

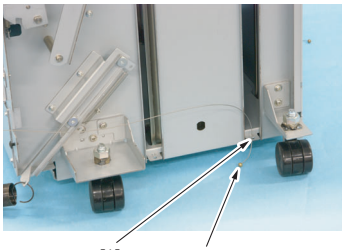

A03NF2C028A

8. Insert the lift wire/L [2] to the right hole [1] on the front face.

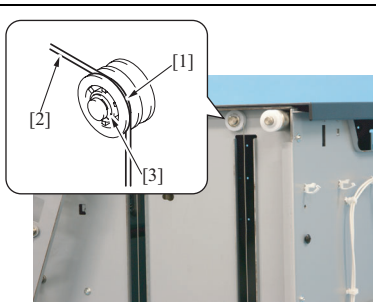

A03NF2C507DA

9. Set the lift wire/L [2] to the near side groove [1] on the wire pulley and secure it with the E-ring [3].

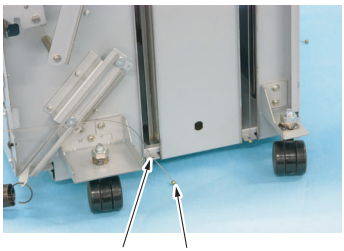

A03NF2C029DA

10. Insert the lift wire/S [2] to the left hole [1] on the front face.

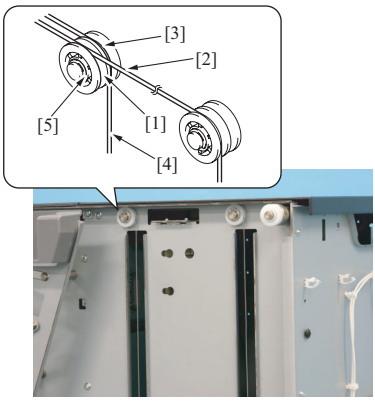

A03NF2C508DA

11. Set the lift wire/L [2] to the near side groove [1] on the wire pulley, and set the lift wire/S [4] to the far side groove [3] and secure them with the E-ring [5].

A03NF2C030DA

NOTE

- **They are properly fixed if both edges of the wire [1] are placed at the same position.**

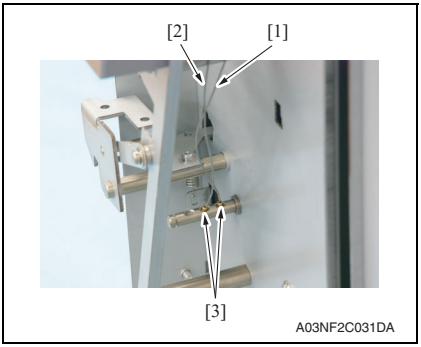

12. Take the edges of the lift wire/S [1] and the lift wire/L [2] to set them to the holes on the shaft [3].

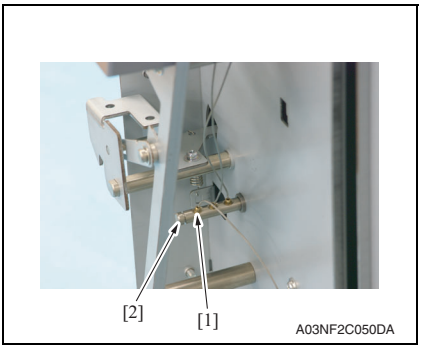

13. Take the edge of the auxiliary wire [1] and set it to the hole on the shaft [2].

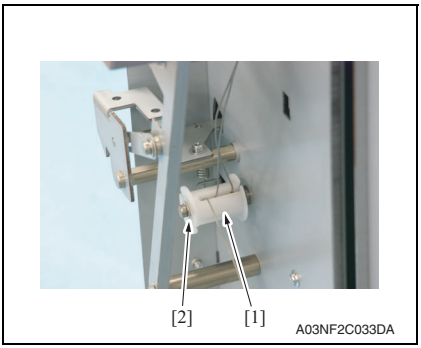

14. Mount the driving pulley [1] and secure it with the E-ring [2].

Rear side

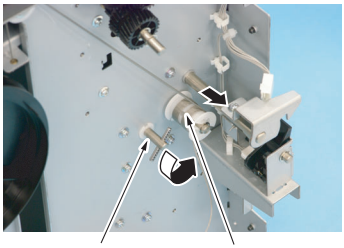

A03NF2C035DA

Front side

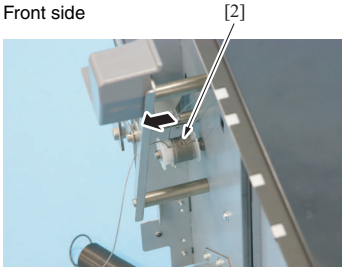

A03NF2C034DA

15. Wind the wire to the pulley [2] as rotating the lift up shaft [1] on the rear face counterclockwise and moving the tray assy to the upper end.

NOTE

- **Wind the wire to the direction shown by the arrow.**

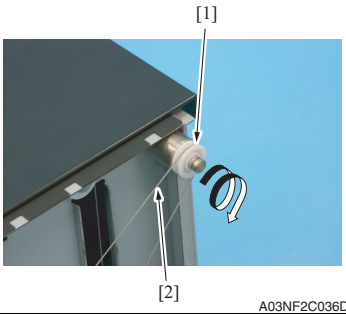

A03NF2C036DA

16. When the wire is wound with the tray assy being at the up end, wind the auxiliary wire [2] to the wire pulley [1] clockwise once.

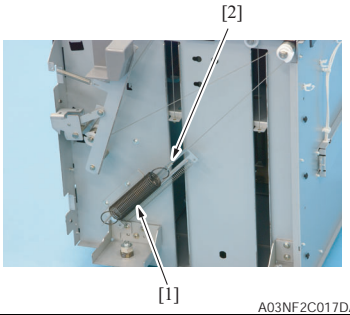

A03NF2C017DA

17. Set the auxiliary wire [1] on the front face to the hook of the slide spring [2].

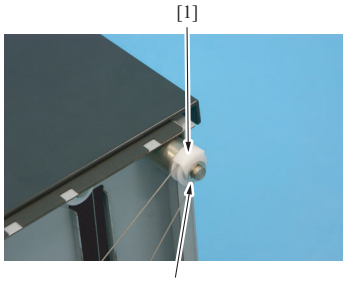

A03NF2C037DA

18. Mount the wire holding jig [1] and secure it with the E-ring [2].

A03NF2C038DA

NOTE

- **Check to make sure that the wire hook [1] is at the position shown on the picture when the tray assy is at the lower end.**

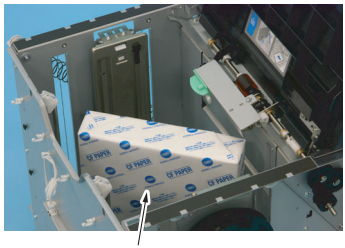

A03NF2C039DA

19. Place a weight such as a package of paper, etc. [1] to move the tray assy down to the lower end.

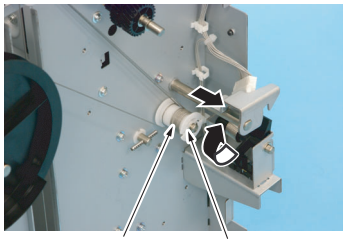

A03NF2C040DA

20. Wrap the lift wire/L [2] on the driving pulley [1] on the rear face clockwise seven times.

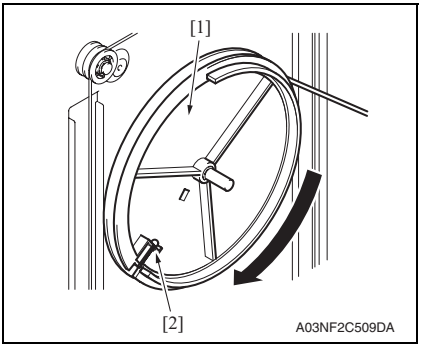

21. Turn the rotation plate [1] one and a half times clockwise from the position where the plate holds the tension, to set the lift wire/L [2].

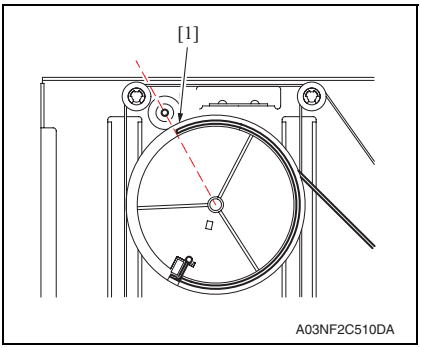

NOTE

- **The rib edge [1] of the rotation plate must be around the dotted lines as shown in the picture when the tray Assy is at the lowest level.**

22. For the rest of the procedure for mounting, take the reverse steps from disassembling.

3.4.8 LU drive board (LUDB)

1. Remove the right cover.
See P.11

2. Remove the rear cover.
See P.12

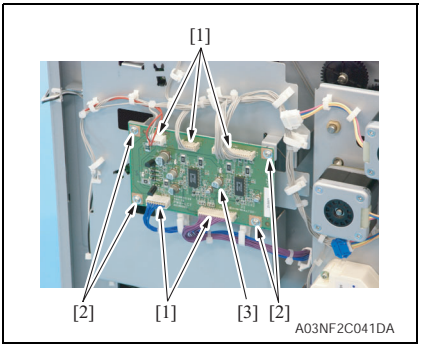

3. Disconnect five connectors [1], remove four screws [2] and remove the LU drive board [3].

3.4.9 Lift-up motor (M1)

1. Remove the right cover.
See P.11
2. Remove the rear cover.
See P.12

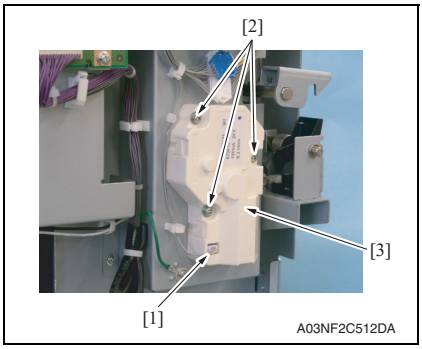

3. Disconnect the connector [1], remove three screws [2] and remove the lift-up motor [3].

3.4.10 Dehumidification heater (DH)

1. Remove the right cover.
See P.11

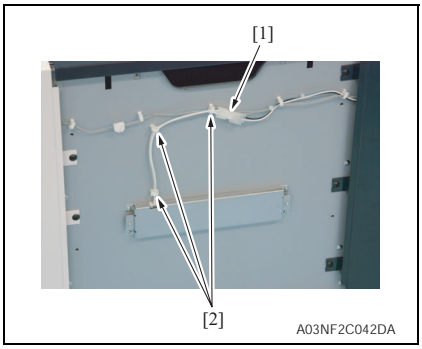

2. Remove the harness from the connector [1] and three wire saddles [2].

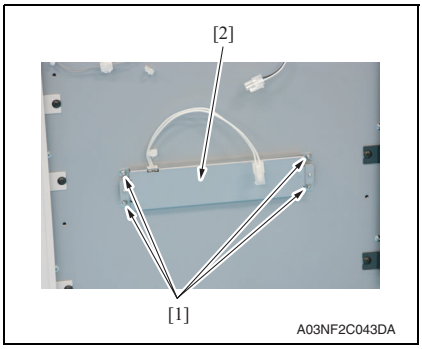

3. Remove four screws [1] and remove the dehumidification heater [2].

3.5 Cleaning point

NOTE

- **The alcohol described in the cleaning procedure of maintenance represents the isopropyl alcohol.**

3.5.1 Pick-up roller

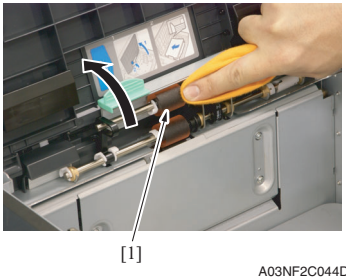

A03NF2C044DA

1. Open the upper door.
2. Move the feed roller up.
3. Using a cleaning pad dampened with alcohol, wipe the pick-up roller [1] clean of dirt.

3.5.2 Feed roller

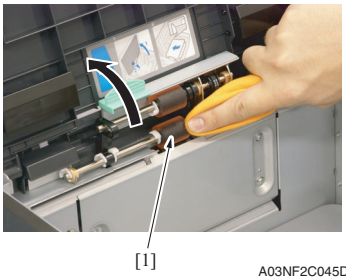

A03NF2C045DA

1. Open the upper door.
2. Move the feed roller up.
3. Using a cleaning pad dampened with alcohol, wipe the feed roller [1] clean of dirt.

3.5.3 Separation roller

1. Open the upper door.
2. Move the feed roller up.

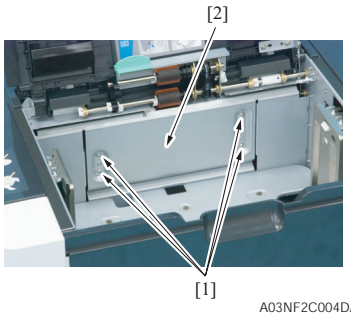

3. Remove four screws [1] and remove the sheet metal [2].

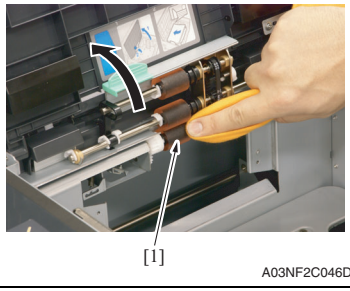

4. Using a cleaning pad dampened with alcohol, wipe the separation roller [1] clean of dirt.

3.5.4 Transport roller

1. Remove the feed cover.
See P.13

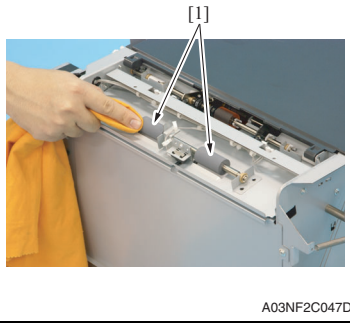

2. Using a cleaning pad dampened with alcohol, wipe the transport roller [1] clean of dirt.

Blank Page

ADJUSTMENT/SETTING

4. HOW TO USE THE ADJUSTMENT SECTION

- "Adjustment/Setting" contains detailed information on the adjustment items and procedures for this machine.
- Throughout this "Adjustment/Setting," the default settings are indicated by " ".

Advance checks

Before attempting to solve the customer problem, the following advance checks must be made. Check to see if:

- The power supply voltage meets the specifications.
- The power supply is properly grounded.
- The machine shares the power supply with any other machine that draws large current intermittently (e.g., elevator and air conditioner that generate electric noise).
- The installation site is environmentally appropriate: high temperature, high humidity, direct sunlight, ventilation, etc.; levelness of the installation site.
- The original has a problem that may cause a defective image.
- The density is properly selected.
- The original glass, slit glass, or related part is dirty.
- Correct paper is being used for printing.
- The units, parts, and supplies used for printing (developer, PC drum, etc.) are properly replenished and replaced when they reach the end of their useful service life.
- Toner is not running out.

⚠ CAUTION

- **Be sure to unplug the power cord of the machine before starting the service job procedures.**
- **If it is unavoidably necessary to service the machine with its power turned ON, use utmost care not to be caught in the scanner cables or gears of the exposure unit.**
- **Special care should be used when handling the fusing unit which can be extremely hot.**
- **The developing unit has a strong magnetic field. Keep watches and measuring instruments away from it.**
- **Take care not to damage the PC drum with a tool or similar device.**
- **Do not touch IC pins with bare hands.**

5. MECHANICAL ADJUSTMENT

5.1 Mechanical adjustment of the paper feed section

5.1.1 Centering adjustment of the LCT

- **This adjustment must be made in the following case:**
  When adjustment in the following screen does not resolve a problem.
  [Service Mode] - [Machine] - [Printer Area] - [Centering]

A. Procedure

1. Call the Service Mode to the screen.
2. Touch [Machine].
3. Touch [Printer Area].
4. Touch [Centering].
5. Touch [LCT].
6. Press the Start key to let the machine produce a test print.

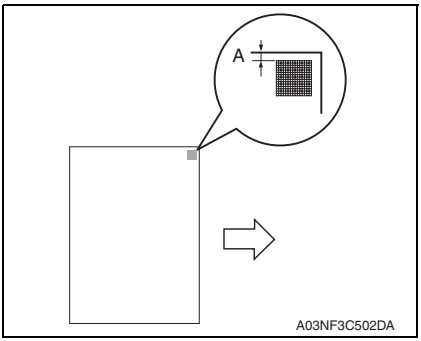

7. Measure the width of printed reference line A.
   Specification: 3.0 mm ± 1.0 mm

8. If the measured width A falls outside the specified range, enter the correction value using the [-] or [+] key.
9. Produce another test print and check to see if width A falls within the specified range.
10. If the use of the [-] or [+] key does not allow the measurement to fall within the specified range, perform the following steps.

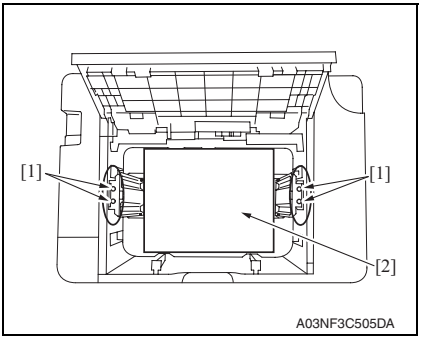

11. Open the upper door on LCT to loosen four screws [1].

NOTE

- **During adjustment, in order to keep the same distance between the paper guide side plates, place a sheet of paper [2] between the paper guide side plates with 1.0 mm apart from each of the plates.**

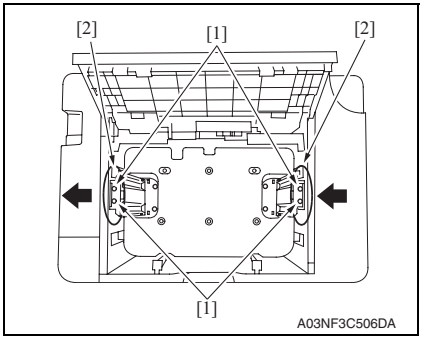

- When the width A is larger than the standard value
  Move the paper guide side plates [2] leftward and tighten four loosened screws [1].

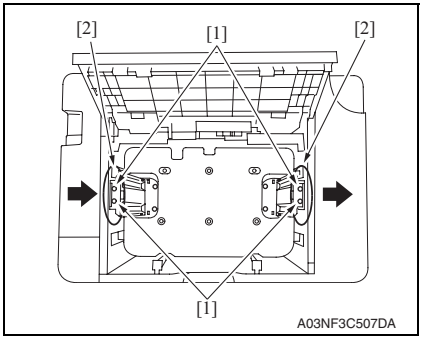

- When the width A is smaller than the standard value.
  Move the paper guide side plates [2] rightward and tighten four loosened screws [1].

12. Load paper and let the machine produce another test print. Then, check width A.
13. Make the adjustment until width A falls within the specified range.

5.1.2 Pick-up roller load adjustment of the LCT

This adjustment must be made in the following case:

- **Incase a no feed jam occurs frequently, perform the pick-up roller load adjustment.**

1. Open the upper door.

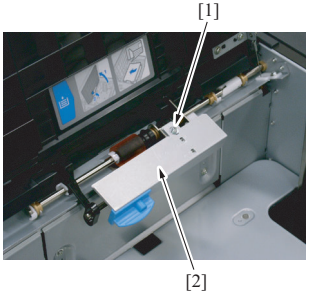

A03NF3C511DA

2. Remove the screw (M3 x 8 mm: V116 0308 03) [1] and remove the paper assist plate assy [2].

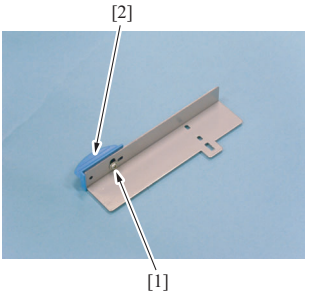

A03NF3C512DA

3. Remove the screw [1] and remove the assist handle [2].

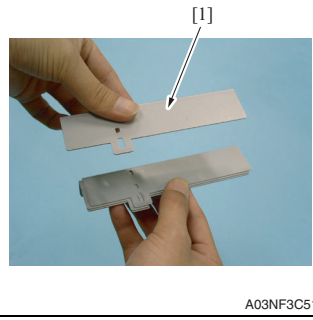

A03NF3C513DA

4. Add one more paper assist plate (A03N 5604 ##) [1] to the original ones.

NOTE

- **Adding only one paper assist plate is allowed and the total needs to be up to four.**

5. Reinstall the assist handle that was removed in step 3, securing it with the screw.
6. Reinstall the paper assist plate assy with a new screw (M3 X 10 mm: V118 0310 03). The screw removed in step 2 (M3 X 8 mm: V116 0308 03) cannot be used to reinstall the assy.
7. Close the upper door.
8. Perform copying/printing to check whether the no feed or the double feed occurs or not.

KONICA MINOLTA

SERVICE MANUAL

FIELD SERVICE

LU-204

2009.07

KONICA MINOLTA BUSINESS TECHNOLOGIES, INC. Ver. 2.0

Revision history

After publication of this service manual, the parts and mechanism may be subject to change for improvement of their performance.
Therefore, the descriptions given in this service manual may not coincide with the actual machine.

When any change has been made to the descriptions in the service manual, a revised version will be issued with a revision mark added as required.

Revision mark:

- To indicate clearly a section revised, △1 is shown at the left margin of the revised section.
  The number inside △1 represents the number of times the revision has been made.

- To indicate clearly a page that contains the revision, ▲1 is shown near the page number of the corresponding page.
  The number inside ▲1 represents the number of times the revision has been made.

NOTE

Revision marks shown in a page are restricted only to the latest ones with the old ones deleted.

- When a page revised in Ver. 2.0 has been changed in Ver. 3.0:
  The revision marks for Ver. 3.0 only are shown with those for Ver. 2.0 deleted.
- When a page revised in Ver. 2.0 has not been changed in Ver. 3.0:
  The revision marks for Ver. 2.0 are left as they are.

Date	Service manual Ver.	Revision mark	Descriptions of revision
2009/07	2.0	△1	—
2009/01	1.0	—	Issue of the first edition

CONTENTS

LU-204

OUTLINE

1. PRODUCT SPECIFICATIONS 1

MAINTENANCE

2. PERIODICAL MAINTENANCE PROCEDURE 3
2.1 Paper feed section 3
2.1.1 Replacing the pick-up roller 3
2.1.2 Replacing the feed roller 4
2.1.3 Replacing the separation roller 5
3. OTHER MAINTENANCE ITEM 6
3.1 Disassembly/Adjustment prohibited items 6
3.2 Disassembly/reassembly parts list 7
3.3 Cleaning parts list 7
3.4 Disassembly/reassembly procedure 8
3.4.1 Large capacity unit 8
3.4.2 Right cover 9
3.4.3 Front cover 10
3.4.4 Rear cover 11
3.4.5 Feed cover 12
3.4.6 LU drive board (LUDB) 12
3.4.7 Lift-up motor (M1) 13
3.4.8 Paper feed motor (M2) 13
3.4.9 Transport motor (M3) 15
3.4.10 Dehumidification heater (DH) 16
3.4.11 Lift wire 17
3.5 Cleaning point 29
3.5.1 Pick-up roller 29
3.5.2 Feed roller 29
3.5.3 Separation roller 30
3.5.4 Transport roller 30

ADJUSTMENT/SETTING

4. HOW TO USE THE ADJUSTMENT SECTION 31
5. MECHANICAL ADJUSTMENT 32

5.1 Mechanical adjustment of the paper feed section 32
5.1.1 Centering adjustment of the LCT 32
5.1.2 Pick-up roller load adjustment of the LCT 34

OUTLINE

1. PRODUCT SPECIFICATIONS

A. Type

Name	2,500 sheets Large Capacity Unit
Type	External option attached to the right side of the main body
Document alignment	Center

B. Paper type

Type	Size	Weight	Capacity
Plain paper	A3, B4, A4S, A4, A3W (12X18) 11X17, 8.5X14, 8.5X11S, 8.5X11, 12X18	64 g/m² to 90 g/m²	2,500 sheets
Thick paper 1		91 g/m² to 120 g/m²	2,000 sheets *2
Thick paper 1+		121 g/m² to 157 g/m²	1,450 sheets *2
Thick paper 2		158 g/m² to 209 g/m²	1,250 sheets *2
Thick paper 3		210 g/m² to 256 g/m²	1,000 sheets *1 *2

*1: Images are out of guarantee.
*2: Excluding damp paper, curled paper, and recycled paper.

C. Machine specifications

Power requirements	DC 24 V, DC 5 V, DC 3.3 V (supplied from the main body)
Max. power consumption	22 W or less
Dimensions	629 mm (W) x 556 mm (D) x 405 mm (H) 24.76 inch (W) x 21.89 inch (D) x 15.94 inch (H)
Weight	25.0 kg (55.12 lb)

D. Operating environment

- Conforms to the operating environment of the main body.

NOTE

- **These specifications are subject to change without notice.**

Blank Page

MAINTENANCE

2. PERIODICAL MAINTENANCE PROCEDURE

2.1 Paper feed section

2.1.1 Replacing the pick-up roller

A. Periodically replaced parts/cycle

⚠1 • Pick-up roller: Every 300,000 counts

B. Procedure

1. Open the upper door.

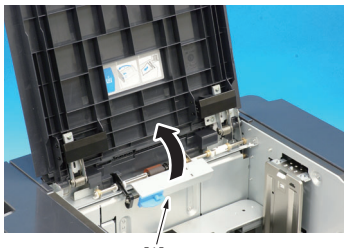

A0TJF2C001DA

2. Move the feed roller [1] up.

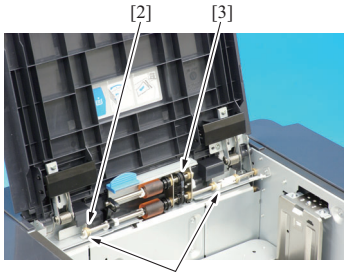

A0TJF2C002DA

3. Remove two C-clips [1], the bushing [2] and remove the feed roller assy [3].

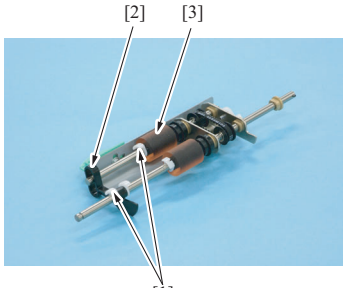

A03NF2C003DA

4. Remove two C-clips [1], the actuator [2] and remove the pick-up roller [3].

5. Reinstall the above parts following the removal steps in reverse.

2.1.2 Replacing the feed roller

A. Periodically replaced parts/cycle

⚠1 • Feed roller: Every 300,000 counts

B. Procedure

1. Open the upper door.

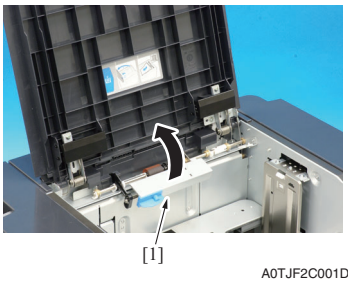

2. Move the feed roller [1] up.

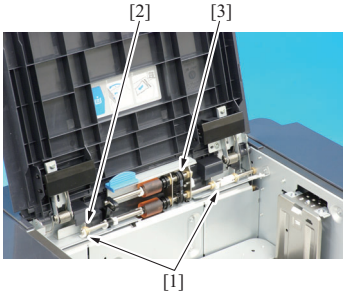

3. Remove two C-clips [1], the bushing [2] and remove the feed roller assy [3].

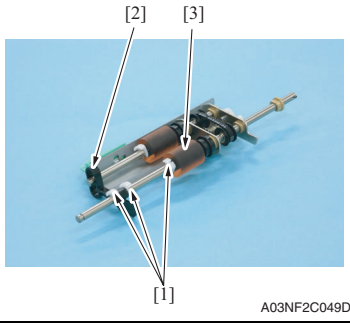

4. Remove three C-clips [1], the actuator [2] and remove the feed roller [3].

5. Reinstall the above parts following the removal steps in reverse.

2.1.3 Replacing the separation roller

A. Periodically replaced parts/cycle

⚠1 • Separation roller: Every 300,000 counts

B. Procedure

1. Open the upper door.

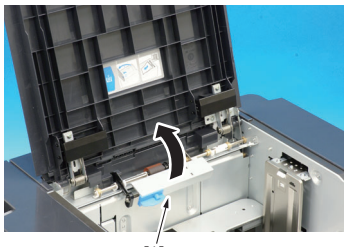

2. Move the feed roller [1] up.

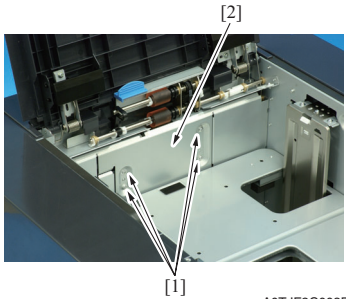

3. Remove four screws [1] and remove the sheet metal [2].

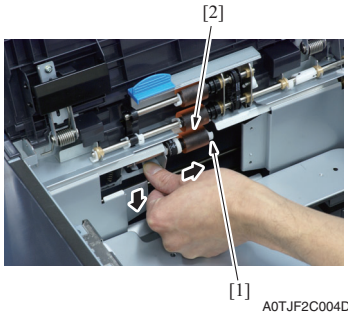

4. Remove the C-clip [1] while pressing the separation roller down to remove the separation roller [2].

5. Reinstall the above parts following the removal steps in reverse.

3. OTHER MAINTENANCE ITEM

3.1 Disassembly/Adjustment prohibited items

A. Paint-locked screws

NOTE

- **To prevent loose screws, a screw lock in blue or green series color is applied to the screws.**
- **The screw lock is applied to the screws that may get loose due to the vibrations and loads created by the use of machine or due to the vibrations created during transportation.**
- **If the screw lock coated screws are loosened or removed, be sure to apply a screw lock after the screws are tightened.**

B. Red-painted screws

NOTE

- **The screws which are difficult to be adjusted in the field are painted in red in order to prevent them from being removed by mistake.**
- **Do not remove or loosen any of the red-painted screws in the field. It should also be noted that, when two or more screws are used for a single part, only one representative screw may be marked with the red paint.**

C. Variable resistors on board

NOTE

- **Do not turn the variable resistors on boards for which no adjusting instructions are given in Adjustment/Setting.**

D. Removal of PWBs

⚠ CAUTION

- **When removing a circuit board or other electrical component, refer to "Handling of PWBs" and follow the corresponding removal procedures.**
- **The removal procedures given in the following omit the removal of connectors and screws securing the circuit board support or circuit board.**
- **Where it is absolutely necessary to touch the ICs and other electrical components on the board, be sure to ground your body.**

3.2 Disassembly/reassembly parts list

Section	Part name	Ref. page
Unit	Large capacity unit	P.8
Exterior parts	Right cover	P.9
	Front cover	P.10
	Rear cover	P.11
	Feed cover	P.12
Board and etc.	LU drive board	P.12
Others	Lift-up motor (M1)	P.13
	Paper feed motor (M2)	P.13
	Transport motor (M3)	P.15
	Dehumidification heater (DH)	P.16
Up/down section	Lift wire	P.17

3.3 Cleaning parts list

Section	Part name	Ref. page
Feed section	Pick-up roller	P.29
	Feed roller	P.29
	Separation roller	P.30
Transport section	Transport roller	P.30

3.4 Disassembly/reassembly procedure

3.4.1 Large capacity unit

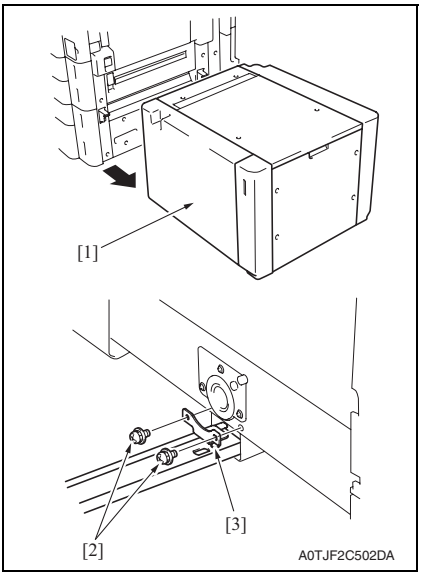

1. Remove the large capacity unit [1] from the main body.
2. Remove two screws [2], and remove the mounting bracket [3].

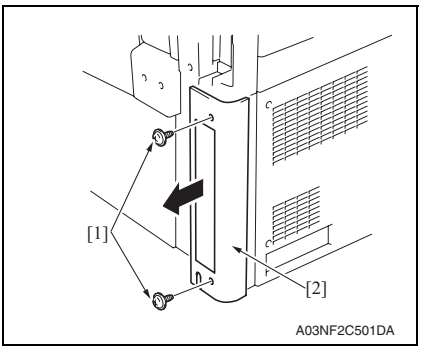

3. Remove two screws [1] to remove the lower right cover/2 [2] from the main body.

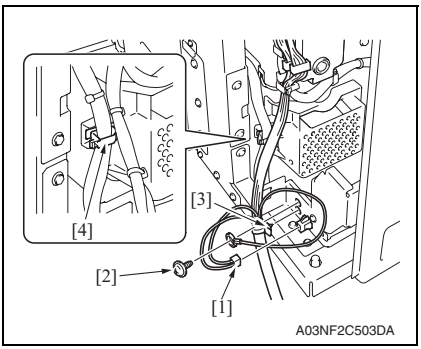

4. Disconnect the connector [1], the screw on the earth wire [2], and the cord clamp [3].

NOTE

- **When reinstalling the harness, be sure not to let the harness be inserted in the wire saddle [4].**

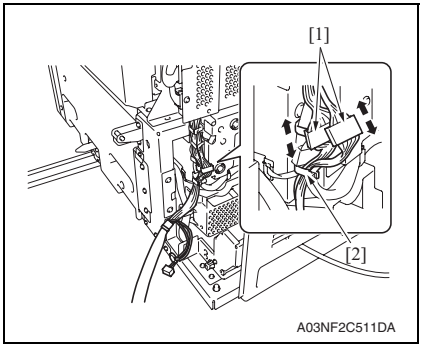

5. Disconnect each of the two connectors [1] and remove the harness from the wire saddle [2].

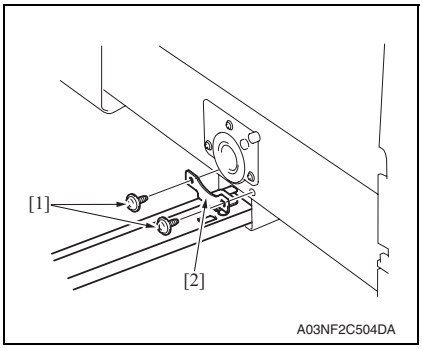

6. Remove two screws [1] and remove the mounting plate [2].

7. Reinstall the above parts following the removal steps in reverse.

3.4.2 Right cover

1. Open the upper door.

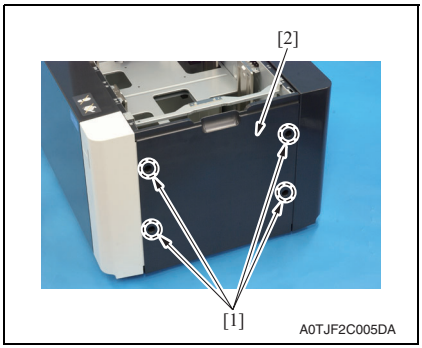

2. Remove four screws [1] and remove the right cover [2].

3. Reinstall the above parts following the removal steps in reverse.

3.4.3 Front cover

1. Remove the right cover.
See P.9

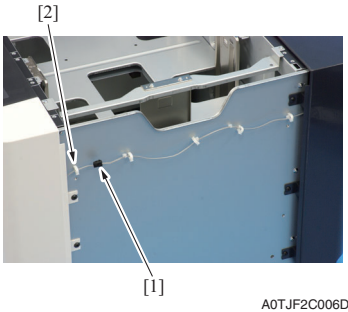

2. Remove the harness from the connector [1] and the wire saddle [2].

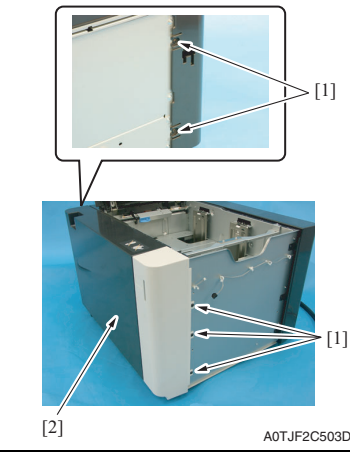

3. Loosen five screws [1] and remove the front cover [2].

4. Reinstall the above parts following the removal steps in reverse.

3.4.4 Rear cover

1. Remove the right cover.
See P.9

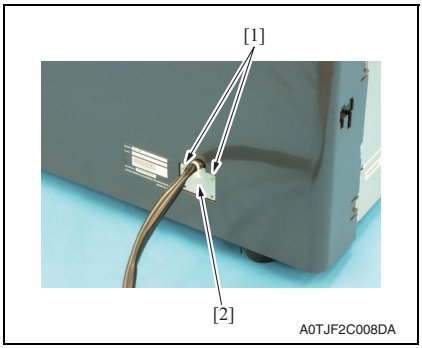

2. Remove two screws [1] and remove the sheet metal [2].

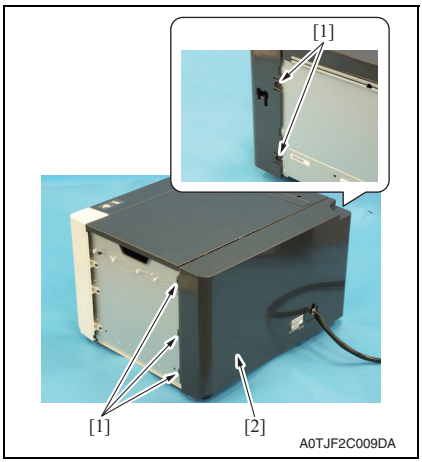

3. Loosen five screws [1] and remove the rear cover [2].

4. Reinstall the above parts following the removal steps in reverse.

3.4.5 Feed cover

1. Remove the right cover.
See P.9
2. Remove the front cover.
See P.10
3. Remove the rear cover.
See P.11

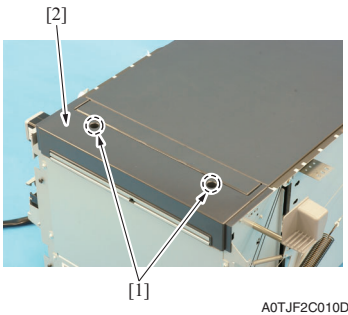

4. Remove two screws [1] and remove the feed cover [2].

5. Reinstall the above parts following the removal steps in reverse.

3.4.6 LU drive board (LUDB)

1. Remove the right cover.
See P.9
2. Remove the rear cover.
See P.11

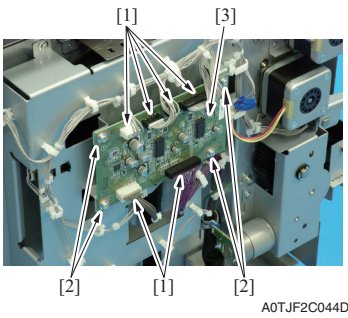

3. Disconnect six connectors [1] and remove four screws [2], and remove the LU drive board [3].

4. Reinstall the above parts following the removal steps in reverse.

3.4.7 Lift-up motor (M1)

1. Remove the right cover.
See P.9
2. Remove the rear cover.
See P.11

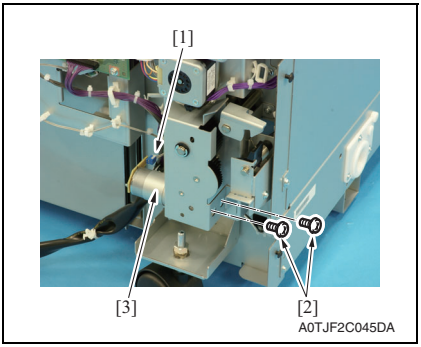

3. Disconnect the connector [1] and remove two screws [2], and remove the lift-up motor [3].
4. Reinstall the above parts following the removal steps in reverse.

3.4.8 Paper feed motor (M2)

1. Remove the right cover.
See P.9
2. Remove the rear cover.
See P.11
3. Remove the transport motor.
See P.15

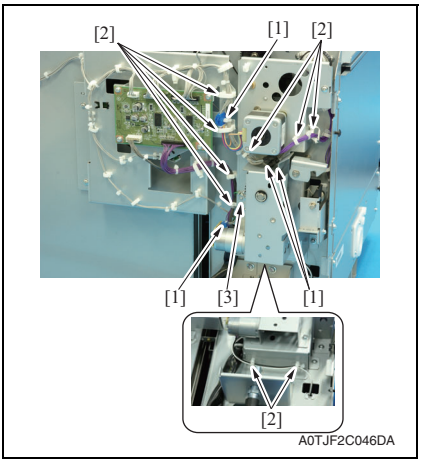

4. Disconnect four connectors [1].
5. Remove the harness from nine wire saddles [2].
6. Remove the screw [3], and remove the ground earth.

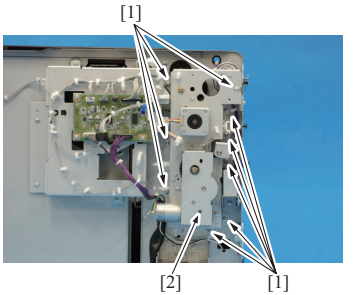

7. Remove nine screws [1], and remove the drive assy [2].

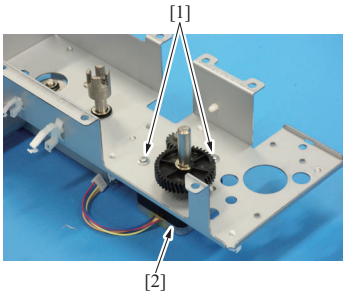

8. Remove two screws [1], and remove the paper feed motor [2].

9. Reinstall the above parts following the removal steps in reverse.

3.4.9 Transport motor (M3)

1. Remove the right cover.
See P.9
2. Remove the rear cover.
See P.11

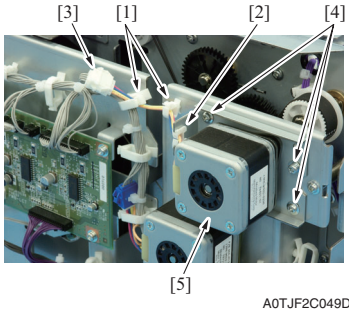

3. Remove the harness from two wire saddles [1] and the edge cover [2].
4. Disconnect the connector [3].
5. Remove three screws [4], and remove the transport motor assy [5].

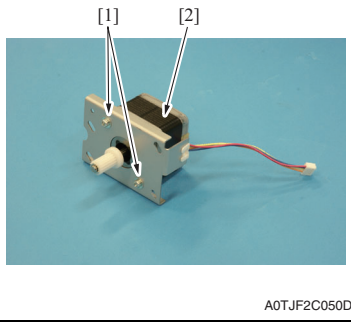

6. Remove two screws [1], and remove the transport motor [2].

7. Reinstall the above parts following the removal steps in reverse.

3.4.10 Dehumidification heater (DH)

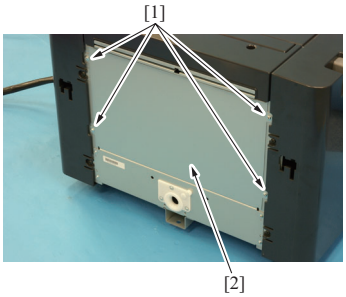

1. Remove four screws [1], and remove the left cover [2].

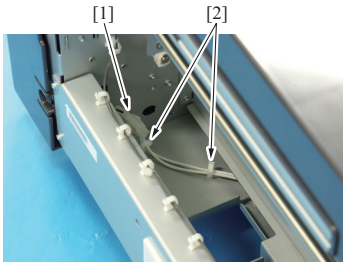

2. Disconnect the connector [1].
3. Remove the harness from two wire saddles [2].

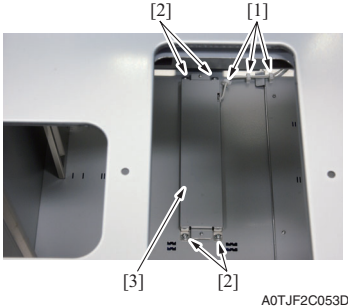

4. Remove the harness from three wire saddles [1].
5. Remove four screws [2], and remove the dehumidification heater [3].

6. Reinstall the above parts following the removal steps in reverse.

3.4.11 Lift wire

A. Removal

1. Remove the right cover.
   See P.9
2. Remove the front cover.
   See P.10
3. Remove the rear cover.
   See P.11
4. Remove the transport motor.
   See P.15

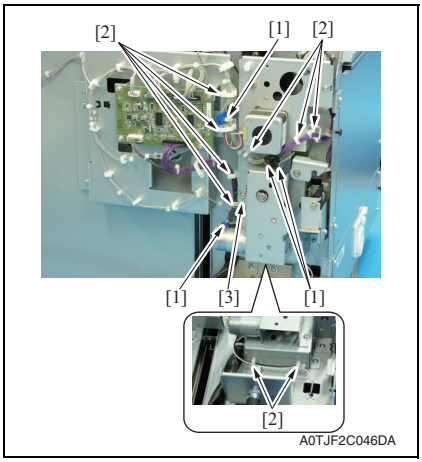

5. Disconnect four connectors [1].
6. Remove the harness from nine wire saddles [2].
7. Remove the screw [3], and remove the ground earth.

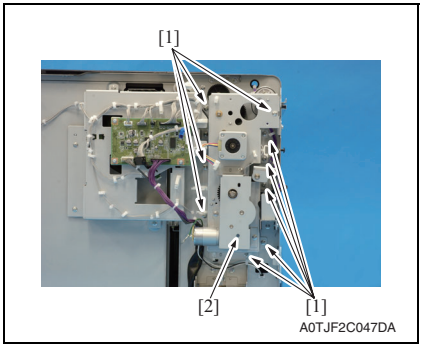

8. Remove nine screws [1], and remove the drive assy [2].

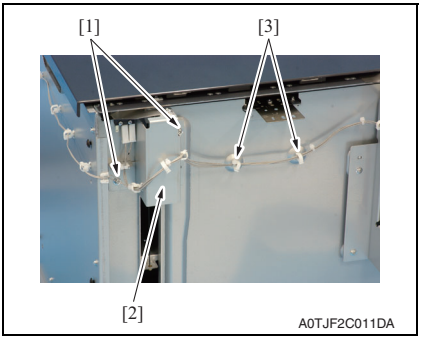

9. Remove two screws [1], and remove the bracket [2].
10. Remove the harness from two wire saddles [3].

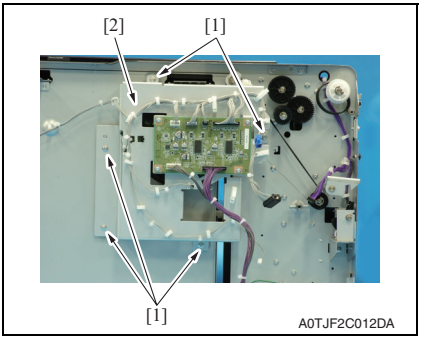

11. Remove five screws [1], and remove the LU drive board assy [2].

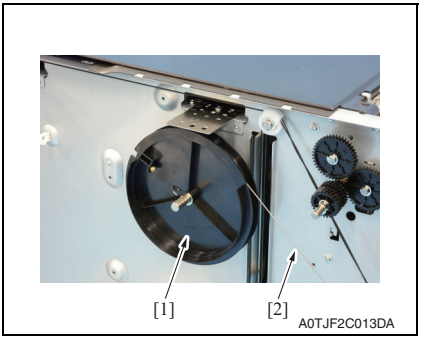

12. Remove the lift wire/L [2] from the rotation plate [1].

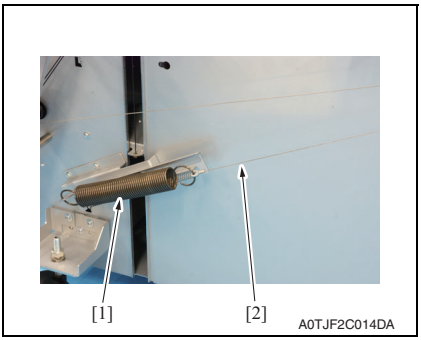

13. Remove the auxiliary wire [2] from the spring [1] on the front side.

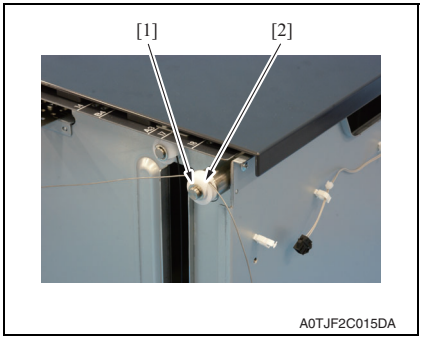

14. Remove the E-ring [1] on the front side to remove the wire holding jig [2].

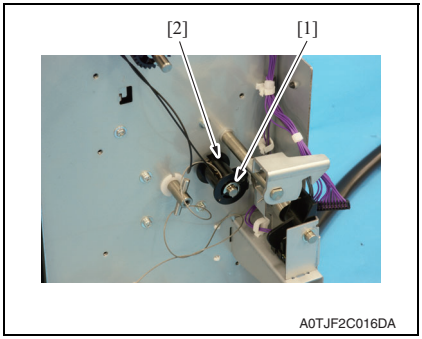

15. Remove the E-ring [1] on the rear side to remove the driving pulley [2].

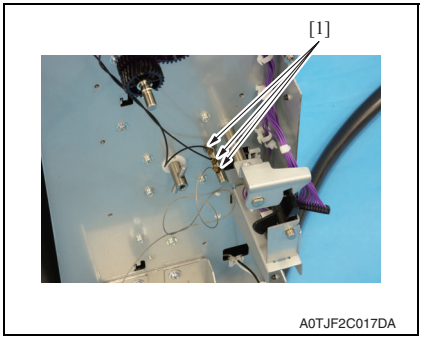

16. Pull out three lift wires [1].

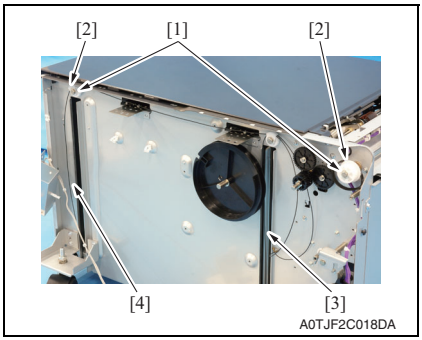

17. Remove two E-rings [1] and two wire pulleys [2] to remove the lift wire/S [3] and the lift wire/L [4].

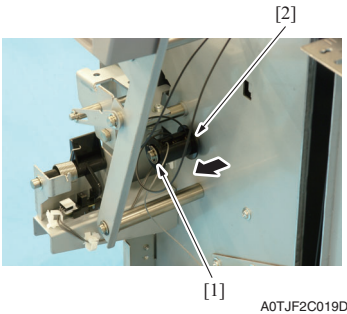

18. Remove the E-ring [1] on the front side to remove the driving pulley [2].

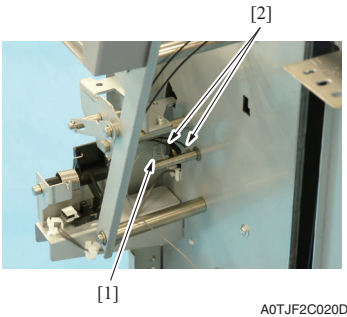

19. Pull out the auxiliary wire [1] and two lift wires [2].

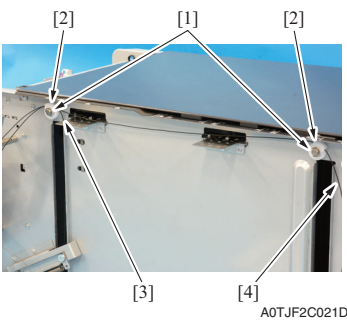

20. Remove two E-rings [1] and two wire pulleys [2] to remove the lift wire/S [3] and the lift wire/L [4].

B. Reinstall

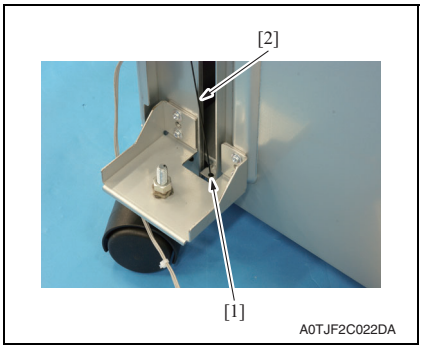

1. Insert the lift wire/L [2] to the left hole [1] on the rear face.

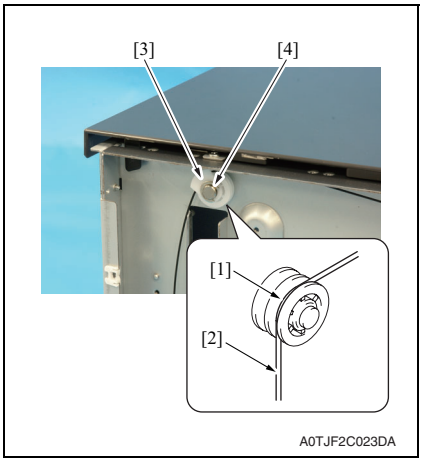

2. Set the lift wire/L [2] to the near side groove [1] on the wire pulley, and secure it with the wire holding jig [3] and the E-ring [4].

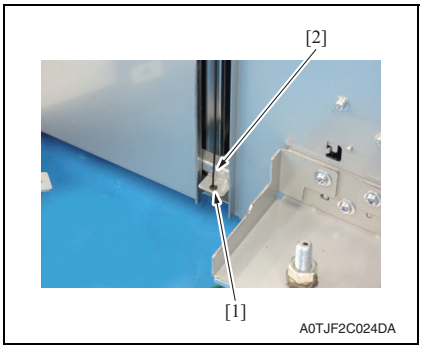

3. Insert the lift wire/S [2] to the right hole [1] on the rear face.

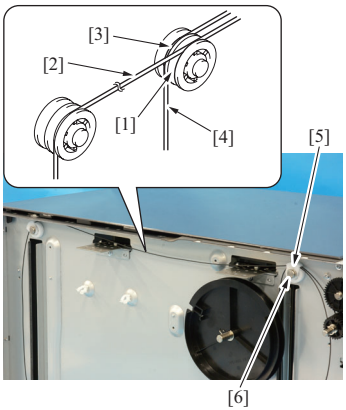

A0TJF2C025DA

4. Set the lift wire/L [2] to the near side groove [1] on the wire pulley, and set the lift wire/S [4] to the far side groove [3] and secure them with the wire holding jig [5] and the E-ring [6].

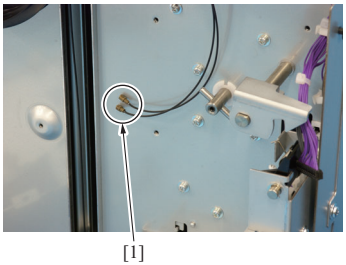

A0TJF2C026DA

NOTE

- **They are properly fixed if both edges of the wire [1] are at the same position.**

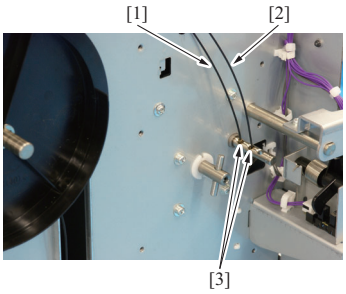

A0TJF2C027DA

5. Take the edges of the lift wire/S [1] and the lift wire/L [2] and set them to the holes on the shaft [3].

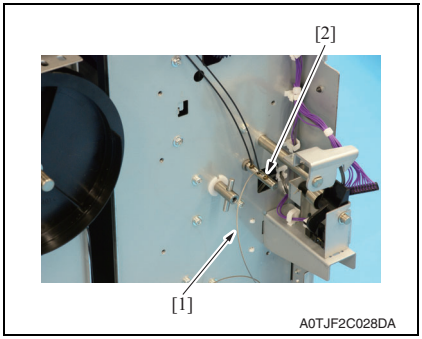

6. Take the edge of the lift wire/L [1] and set it to the hole [2] on the shaft.

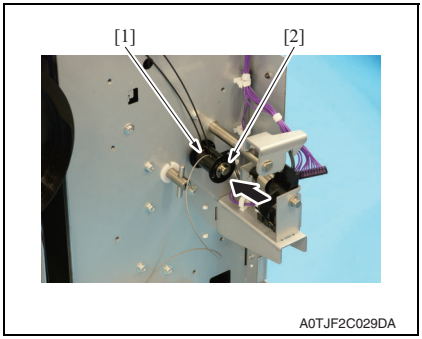

7. Mount the driving pulley [1] and secure it with the E-ring [2].

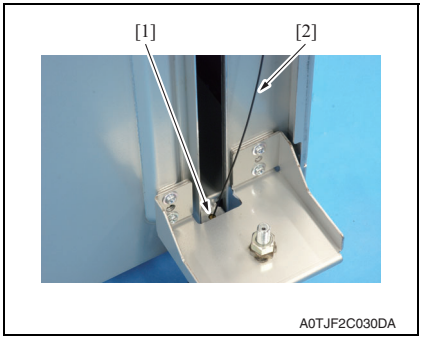

8. Insert the lift wire/L [2] to the right hole [1] on the front face.

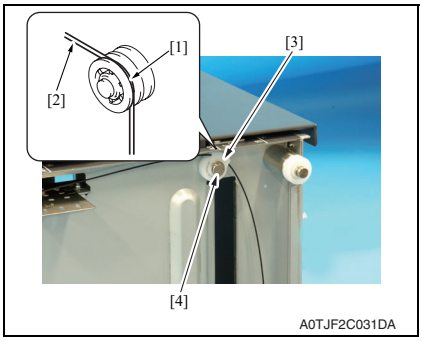

9. Set the lift wire/L [2] to the near side groove [1] on the wire pulley and secure it with the wire holding jig [3] and the E-ring [4].

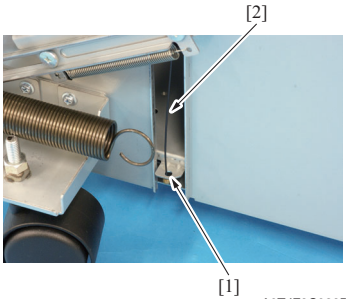

A0TJF2C032DA

10. Insert the lift wire/S [2] to the left hole [1] on the front face.

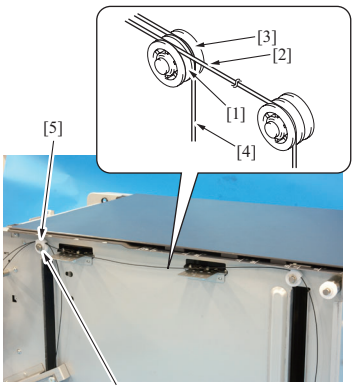

A0TJF2C033DA

11. Set the lift wire/L [2] to the near side groove [1] on the wire pulley, and set the lift wire/S [4] to the far side groove [3] and secure them with the wire holding jig [5] and the E-ring [6].

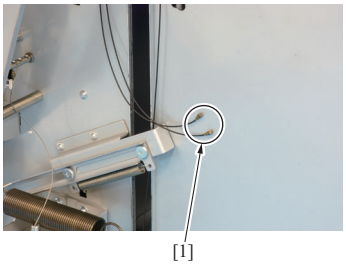

A0TJF2C034DA

NOTE

- **They are properly fixed if both edges of the wire [1] are placed at the same position.**

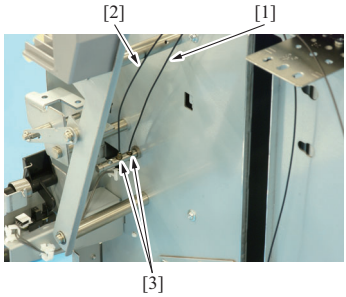

12. Take the edges of the lift wire/S [1] and the lift wire/L [2] to set them to the holes on the shaft [3].

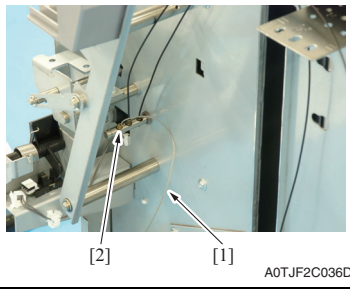

13. Take the edge of the auxiliary wire [1] and set it to the hole [2] on the shaft.

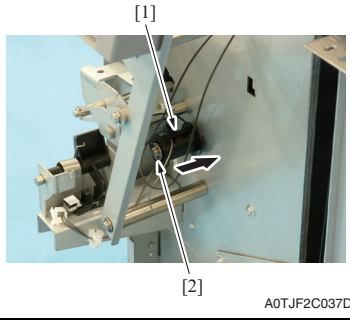

14. Mount the driving pulley [1] and secure it with the E-ring [2].

Rear side

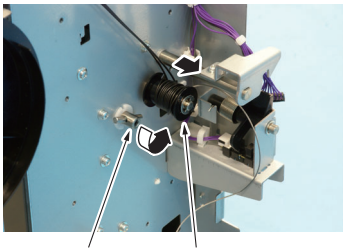

A0TJF2C038DA

Front side

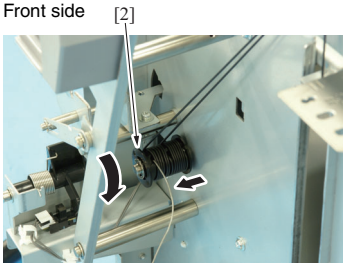

A0TJF2C058DA

15. Wind the wire to the pulley [2] as rotating the lift up shaft [1] on the rear face counterclockwise and moving the tray assy to the upper end.

NOTE

- **Wind the wire to the direction shown by the arrow.**

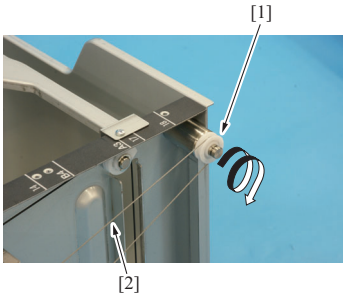

A0TJF2C039DA

16. When the wire is wound with the tray assy being at the up end, wind the auxiliary wire [2] to the wire pulley [1] clockwise once.

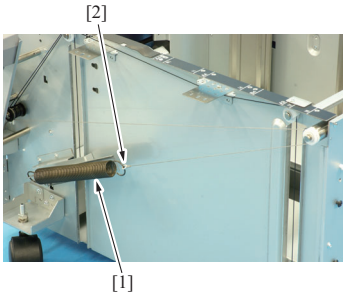

A0TJF2C040DA

17. Set the auxiliary wire [1] on the front face to the hook of the slide spring [2].

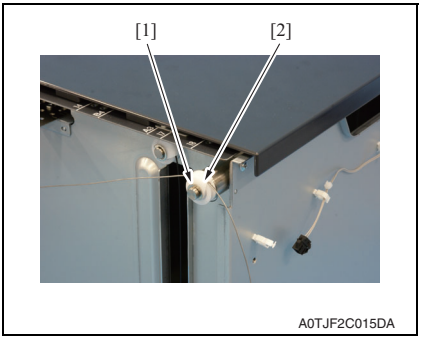

18. Mount the wire holding jig [2] and secure it with the E-ring [1].

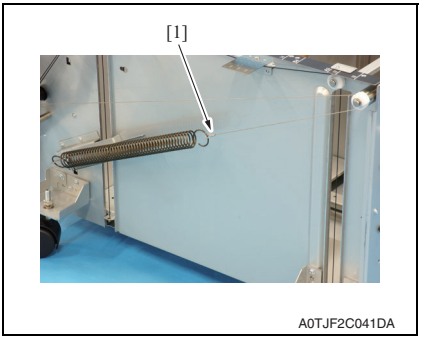

NOTE

- **Check to make sure that the wire hook [1] is at the position shown on the picture when the tray assy is at the lower end.**

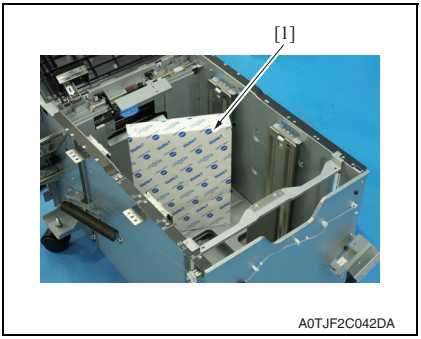

19. Place a weight such as a package of paper, etc. [1] to move the tray assy down to the lower end.

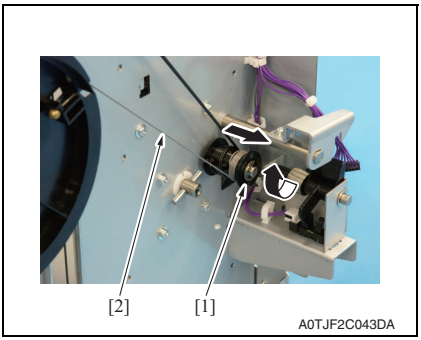

20. Wrap the lift wire/L [2] on the driving pulley [1] on the rear face clockwise six times.

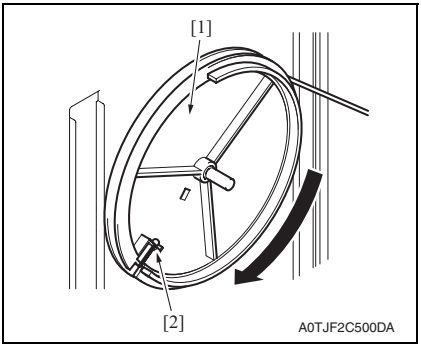

21. Turn the rotation plate [1] one and a half times clockwise from the position where the plate holds the tension, to set the lift wire/L [2].

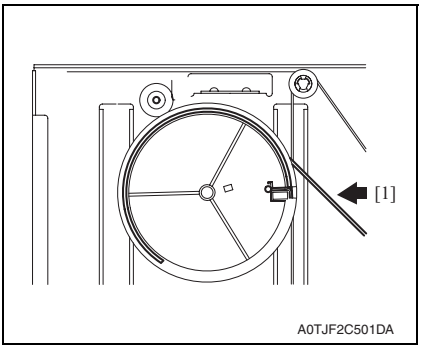

NOTE

- **When the tray Assy is at the lower limit, make sure that the part [1] from which the wire is put over the rotation plate is placed at the position shown by the arrow.**

22. For the rest of the procedure for mounting, take the reverse steps from disassembling.

3.5 Cleaning point

NOTE

- **The alcohol described in the cleaning procedure of maintenance represents the isopropyl alcohol.**

3.5.1 Pick-up roller

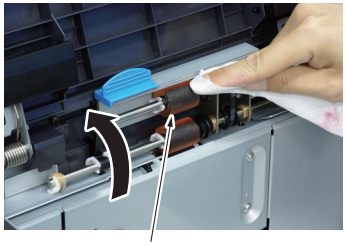

A0TJF2C054DA

1. Open the upper door.
2. Move the feed roller up.
3. Using a cleaning pad dampened with alcohol, wipe the pick-up roller [1] clean of dirt.

3.5.2 Feed roller

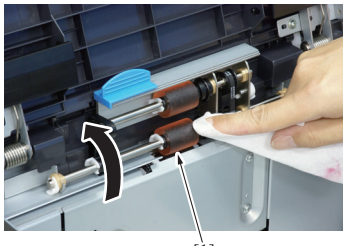

A0TJF2C055DA

1. Open the upper door.
2. Move the feed roller up.
3. Using a cleaning pad dampened with alcohol, wipe the feed roller [1] clean of dirt.

3.5.3 Separation roller

1. Open the upper door.
2. Move the feed roller up.

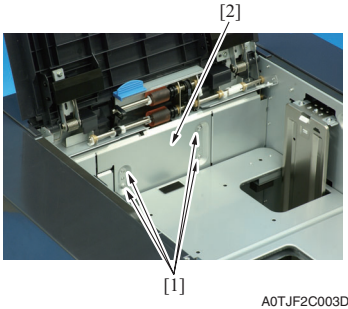

3. Remove four screws [1] and remove the sheet metal [2].

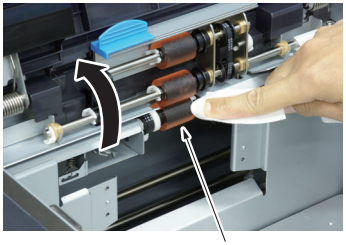

4. Using a cleaning pad dampened with alcohol, wipe the separation roller [1] clean of dirt.

3.5.4 Transport roller

1. Remove the feed cover.
See P.12

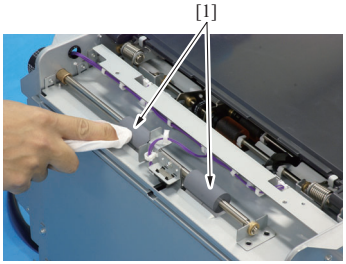

2. Using a cleaning pad dampened with alcohol, wipe the transport roller [1] clean of dirt.

ADJUSTMENT/SETTING

4. HOW TO USE THE ADJUSTMENT SECTION

- "Adjustment/Setting" contains detailed information on the adjustment items and procedures for this machine.
- Throughout this "Adjustment/Setting," the default settings are indicated by " ".

Advance checks

Before attempting to solve the customer problem, the following advance checks must be made. Check to see if:

- The power supply voltage meets the specifications.
- The power supply is properly grounded.
- The machine shares the power supply with any other machine that draws large current intermittently (e.g., elevator and air conditioner that generate electric noise).
- The installation site is environmentally appropriate: high temperature, high humidity, direct sunlight, ventilation, etc.; levelness of the installation site.
- The original has a problem that may cause a defective image.
- The density is properly selected.
- The original glass, slit glass, or related part is dirty.
- Correct paper is being used for printing.
- The units, parts, and supplies used for printing (developer, PC drum, etc.) are properly replenished and replaced when they reach the end of their useful service life.
- Toner is not running out.

⚠ CAUTION

- **Be sure to unplug the power cord of the machine before starting the service job procedures.**
- **If it is unavoidably necessary to service the machine with its power turned ON, use utmost care not to be caught in the scanner cables or gears of the exposure unit.**
- **Special care should be used when handling the fusing unit which can be extremely hot.**
- **The developing unit has a strong magnetic field. Keep watches and measuring instruments away from it.**
- **Take care not to damage the PC drum with a tool or similar device.**
- **Do not touch IC pins with bare hands.**

5. MECHANICAL ADJUSTMENT

5.1 Mechanical adjustment of the paper feed section

5.1.1 Centering adjustment of the LCT

- **This adjustment must be made in the following case:**
- **When adjustment in the following screen does not resolve a problem.**
  [Service Mode] → [Machine] → [Printer Area] → [Centering]

A. Procedure

1. Call the Service Mode to the screen.
2. Touch [Machine].
3. Touch [Printer Area].
4. Touch [Centering].
5. Touch [LCT].
6. Press the Start key to let the machine produce a test print.

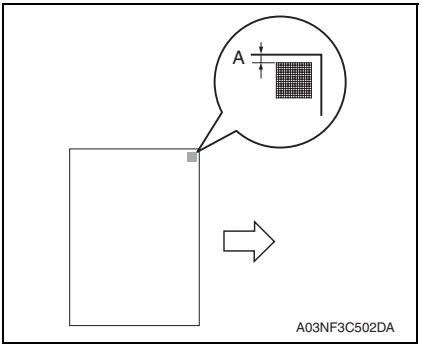

7. Measure the width of printed reference line A.
   Specification: 3.0 mm ± 1.0 mm

8. If the measured width A falls outside the specified range, enter the correction value using the [-] or [+] key.
9. Produce another test print and check to see if width A falls within the specified range.
10. If the use of the [-] or [+] key does not allow the measurement to fall within the specified range, perform the following steps.

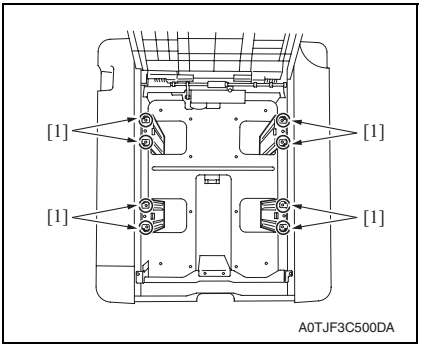

11. Open the upper door on LCT to loosen eight screws [1].

NOTE

- **During adjustment, in order to keep the same distance between the paper guide side plates, place a sheet of paper between the paper guide side plates with 1.0 mm apart from each of the plates.**

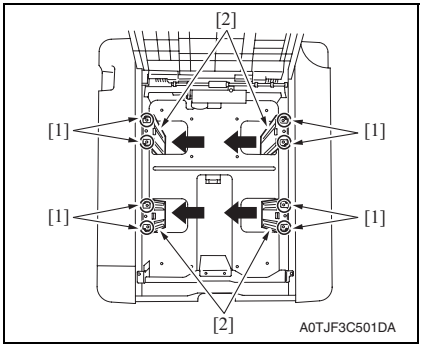

- When the width A is larger than the standard value
  Move the paper guide side plates [2] leftward and tighten eight loosened screws [1].

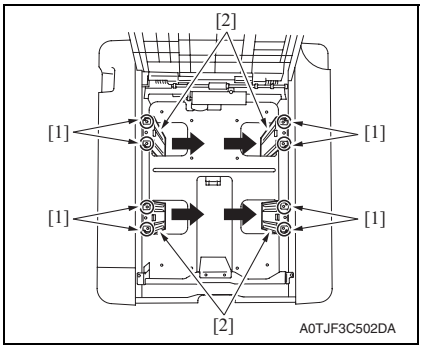

- When the width A is smaller than the standard value.
  Move the paper guide side plates [2] rightward and tighten eight loosened screws [1].

12. Load paper and let the machine produce another test print. Then, check width A.
13. Make the adjustment until width A falls within the specified range.

5.1.2 Pick-up roller load adjustment of the LCT

This adjustment must be made in the following case:

- **Incase a no feed jam occurs frequently, perform the pick-up roller load adjustment.**

1. Open the upper door.

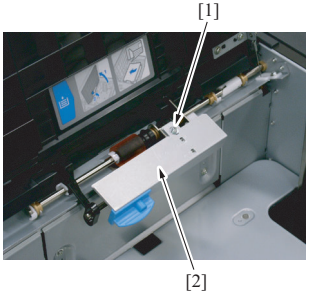

A03NF3C511DA

2. Remove the screw (M3 x 8 mm: V116 0308 03) [1] and remove the paper assist plate assy [2].

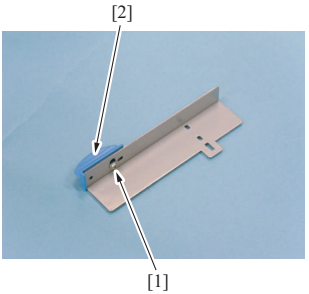

A03NF3C512DA

3. Remove the screw [1] and remove the assist handle [2].

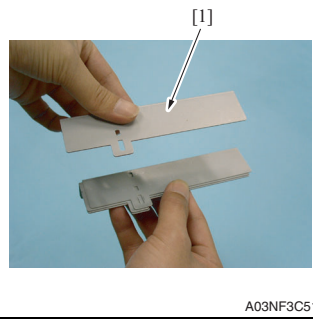

A03NF3C513DA

4. Add one more paper assist plate (A03N 5604 ##) [1] to the original ones.

NOTE

- **Adding only one paper assist plate is allowed and the total needs to be up to four.**

5. Reinstall the assist handle that was removed in step 3, securing it with the screw.
6. Reinstall the paper assist plate assy with a new screw (M3 X 10 mm: V118 0310 03). The screw removed in step 2 (M3 X 8 mm: V116 0308 03) cannot be used to reinstall the assy.
7. Close the upper door.
8. Perform copying/printing to check whether the no feed or the double feed occurs or not.

KONICA MINOLTA

SERVICE MANUAL

FIELD SERVICE

JS-504

2009.07

KONICA MINOLTA BUSINESS TECHNOLOGIES, INC. Ver. 1.0

Revision history

After publication of this service manual, the parts and mechanism may be subject to change for improvement of their performance.
Therefore, the descriptions given in this service manual may not coincide with the actual machine.

When any change has been made to the descriptions in the service manual, a revised version will be issued with a revision mark added as required.

Revision mark:

- To indicate clearly a section revised, is shown at the left margin of the revised section.
  The number inside represents the number of times the revision has been made.

- To indicate clearly a page that contains the revision, is shown near the page number of the corresponding page.
  The number inside represents the number of times the revision has been made.

NOTE

Revision marks shown in a page are restricted only to the latest ones with the old ones deleted.

- When a page revised in Ver. 2.0 has been changed in Ver. 3.0:
  The revision marks for Ver. 3.0 only are shown with those for Ver. 2.0 deleted.
- When a page revised in Ver. 2.0 has not been changed in Ver. 3.0:
  The revision marks for Ver. 2.0 are left as they are.

2009/07	1.0	—	Issue of the first edition
Date	Service manual Ver.	Revision mark	Descriptions of revision

CONTENTS

JS-504

OUTLINE

1. PRODUCT SPECIFICATIONS 1

MAINTENANCE

2. PERIODICAL MAINTENANCE PROCEDURE 3
2.1 Paper exit section 3
2.1.1 Cleaning of the roller and roll 3
3. OTHER MAINTENANCE ITEM 4
3.1 Items not allowed to be disassembled and adjusted 4
3.2 Disassembly/reassembly parts list 5
3.3 Disassembly/reassembly procedure 5
3.3.1 Separator 5
3.3.2 Front cover 6
3.3.3 Rear left cover 7
3.3.4 Rear right cover 7
3.3.5 Upper tray 8
3.3.6 Paper guide plate 8
3.3.7 JS control board (JSCB) 9
3.3.8 Transport motor (M1) 9
3.3.9 Route change motor (M3) 10
3.3.10 Shift motor (M2) 11

Blank Page

OUTLINE

1. PRODUCT SPECIFICATIONS

A. Type

Type	Built-in type 2-bin stacker
Installation	Installed in main body
Document alignment	Center

B. Functions

Modes	Sort, group, sort offset, group offset

C. Paper

Exit tray	Size	Type		Capacity
Upper tray	A5S, B5S/B5, A4S/A4, B4, A3 8-1/2 X 11S/8-1/2 X 11, 8-1/2 X 14, 11 X 17 Max.: 297 mm X 431.8 mm 11.75 inch X 17 inch Min.: 148 mm X 210 mm 5.75 inch X 8.25 inch	Plain paper (64 to 90 g/m²) (17 to 24 lb)		50 sheets
Lower tray	A6S, A5S/A5, B6S, B5S/B5, A4S/A4, B4, A3, A3 Wide, Post card S 5-1/2 X 8-1/2S/5-1/2 X 8-1/2, 8-1/2 X 11S/8-1/2 X 11, 8-1/2 X 14, 11 X 17, 12-1/4 X 18 Max.: 311.1 mm X 1200 mm 12.25 inch X 47.25 inch Min.: 90 mm X 139.7 mm 3.5 inch X 5.5 inch	Plain paper (64 to 90 g/m²) (17 to 24 lb)		150 sheets
		Special paper	Thick paper 1 (91 to 120 g/m²) (24.25 to 32 lb)	20 sheets
			Thick paper 1+ (121 to 157 g/m²) (32.25 to 41.75 lb)	
			Thick paper 2 (158 to 209 g/m²) (42 to 55.5 lb)	
			Thick paper 3 (210 to 256 g/m²) (55.75 to 68 lb)	
			Thick paper 4 (257 to 300 g/m²) (68.25 to 80 lb)	
			OHP film	
			Post card	
			Label	
			Envelope	10 sheets
			Long size paper	1 sheet

D. Offset function

Exit tray	Lower tray
Shift amount	30 mm
Types of paper to be used	Plain paper, Thick paper 1/1+/2/3/4
Size	B5S/B5, A4S/A4, B4, A3 8-$^1/_2$ X 11S/8-$^1/_2$ X 11, 8-$^1/_2$ X 14, 11 X 17

E. Machine specifications

Power requirements	DC 24 V ± 10 % (supplied from the main body)
	DC5 V ± 5 %
Max. power consumption	40 W or less
Dimensions	431 mm (W) X 540 mm (D) X 131 mm (H) 17 inch (W) X 21.25 inch (D) X 5.25 inch (H) 558 mm (W) X 540 mm (D) X 131 mm (H) *1 22 inch (W) X 21.25 inch (D) X 5.25 inch (H) *1
Weight	5.0 kg (11 lb)

*1: Size when the paper exit tray is pulled out

F. Operating environment

- Conforms to the operating environment of the main body.

NOTE

- **These specifications are subject to change without notice.**

MAINTENANCE

2. PERIODICAL MAINTENANCE PROCEDURE

2.1 Paper exit section

NOTE

- **The alcohol described in the cleaning procedure of maintenance represents the isopropyl alcohol.**

2.1.1 Cleaning of the roller and roll

A. Periodically cleaning parts/cycle

- Roller and roll: Every 300,000 counts

1. Remove the separator.
See P.5

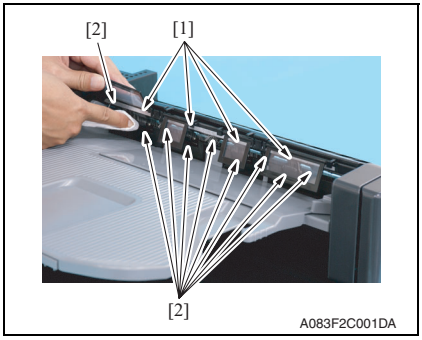

2. Using a cleaning pad dampened with alcohol, wipe the roller [1] and roll [2].

3. Remove the upper tray.
See P.8

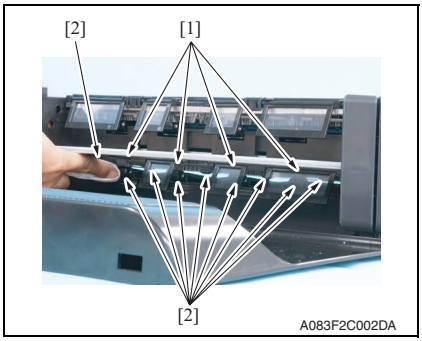

4. Using a cleaning pad dampened with alcohol, wipe the roller [1] and roll [2].

3. OTHER MAINTENANCE ITEM

3.1 Items not allowed to be disassembled and adjusted

A. Paint-locked screws

NOTE

- **To prevent loose screws, a screw lock in blue or green series color is applied to the screws.**
- **The screw lock is applied to the screws that may get loose due to the vibrations and loads created by the use of machine or due to the vibrations created during transportation.**
- **If the screw lock coated screws are loosened or removed, be sure to apply a screw lock after the screws are tightened.**

B. Red-painted screws

NOTE

- **The screws which are difficult to be adjusted in the field are painted in red in order to prevent them from being removed by mistake.**
- **Do not remove or loosen any of the red-painted screws in the field. It should also be noted that, when two or more screws are used for a single part, only one representative screw may be marked with the red paint.**

C. Variable resistors on board

NOTE

- **Do not turn the variable resistors on boards for which no adjusting instructions are given in Adjustment/Setting.**

D. Removal of PWBs

⚠ CAUTION

- **When removing a circuit board or other electrical component, refer to "Handling of PWBs" and follow the corresponding removal procedures.**
- **The removal procedures given in the following omit the removal of connectors and screws securing the circuit board support or circuit board.**
- **Where it is absolutely necessary to touch the ICs and other electrical components on the board, be sure to ground your body.**

3.2 Disassembly/reassembly parts list

Section	Part name	Ref. page
Unit	Separator	P.5
Exterior parts	Front cover	P.6
	Rear left cover	P.7
	Rear right cover	P.7
	Upper tray	P.8
	Paper guide plate	P.8
Board	JS control board (JSCB)	P.9
Motors	Transport motor (M1)	P.9
	Route change motor (M3)	P.10
	Shift motor (M2)	P.11

3.3 Disassembly/reassembly procedure

3.3.1 Separator

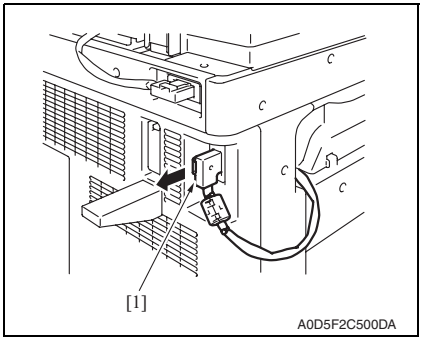

1. Remove the relay connector [1].

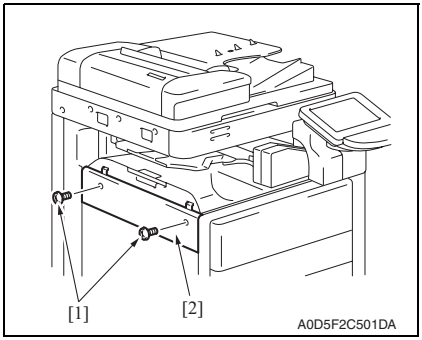

2. Remove two screws [1] and remove the mount cover [2].

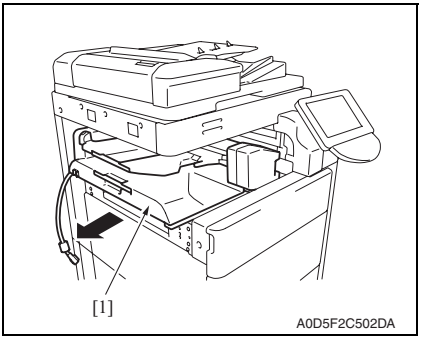

3. Remove the separator [1].

4. Reinstall the above parts following the removal steps in reverse.

3.3.2 Front cover

1. Remove the separator.
See P.5

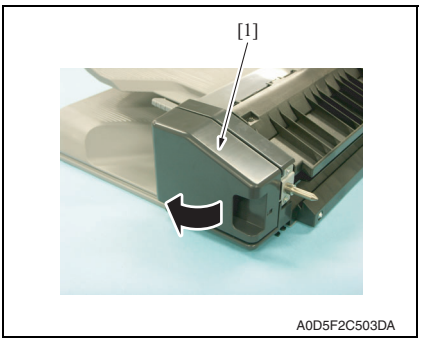

2. Open the misfeed clearing cover [1].

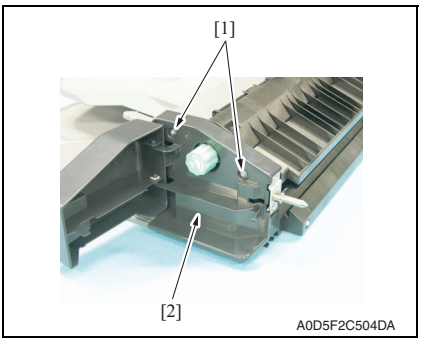

3. Remove two screws [1] and remove the front cover [2].

4. Reinstall the above parts following the removal steps in reverse.

3.3.3 Rear left cover

1. Remove the separator.
See P.5

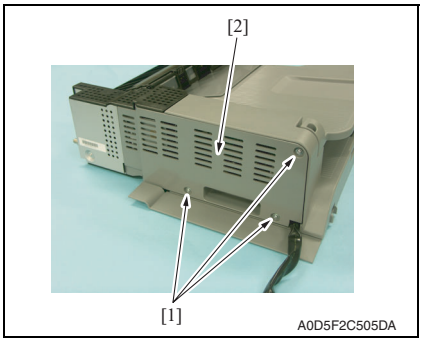

2. Remove three screws [1] and remove the rear left cover [2].

3. Reinstall the above parts following the removal steps in reverse.

3.3.4 Rear right cover

1. Remove the separator.
See P.5
2. Remove the rear left cover.
See P.7

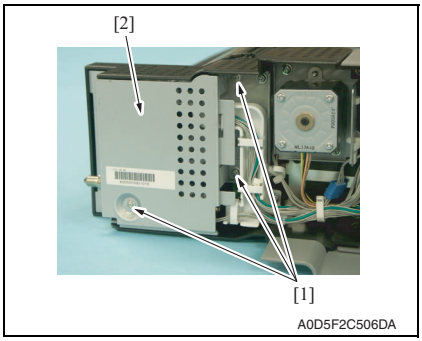

3. Remove three screws [1] and remove the rear right cover [2].

4. Reinstall the above parts following the removal steps in reverse.

3.3.5 Upper tray

1. Remove the separator.
See P.5

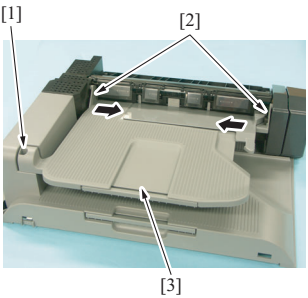

2. Remove the screw [1]. Push two protrusions [2] in the directions of the arrows and remove the upper tray [3].

3. Reinstall the above parts following the removal steps in reverse.

3.3.6 Paper guide plate

1. Remove the separator.
See P.5
2. Remove the upper tray.
See P.8

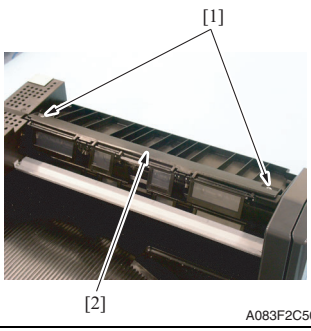

3. Remove two screws [1] and remove the paper guide plate cover [2].

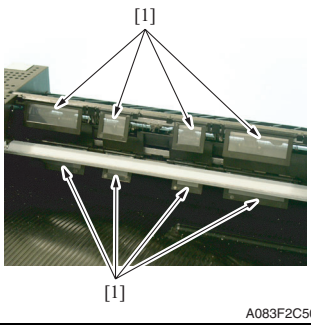

4. Remove eight paper guide plates [1].

NOTE

- **When reinstalling the paper guide plates [1], make sure that the film side must face the roller.**

5. Reinstall the above parts following the removal steps in reverse.

3.3.7 JS control board (JSCB)

1. Remove the separator.
See P.5
2. Remove the rear left cover.
See P.7

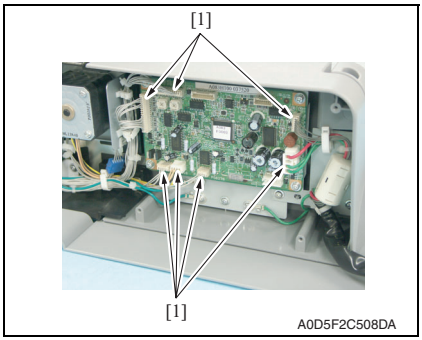

3. Disconnect all seven connectors [1] from the JS control board.

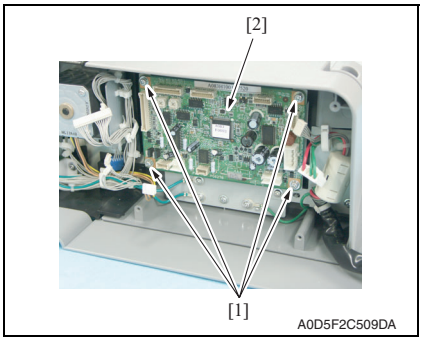

4. Remove four screws [1] and remove the JS control board [2].

5. Reinstall the above parts following the removal steps in reverse.

3.3.8 Transport motor (M1)

1. Remove the separator.
See P.5
2. Remove the rear left cover.
See P.7

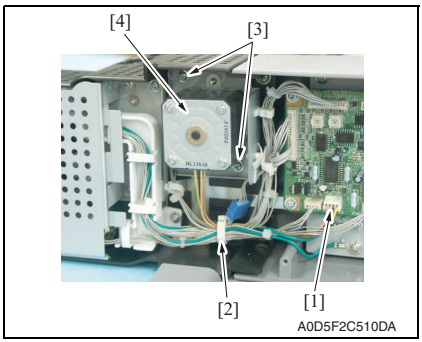

3. Disconnect the connector [1] and remove the harness from the wire saddle [2].
4. Remove two screws [3] and remove the transport motor assy [4].

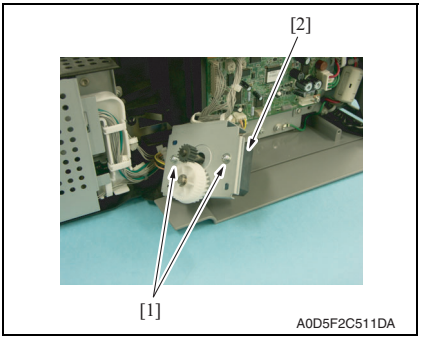

5. Remove two screws [1] and remove the transport motor [2].

6. Reinstall the above parts following the removal steps in reverse.

3.3.9 Route change motor (M3)

1. Remove the separator.
See P.5
2. Remove the rear left cover.
See P.7
3. Remove the rear right cover.
See P.7

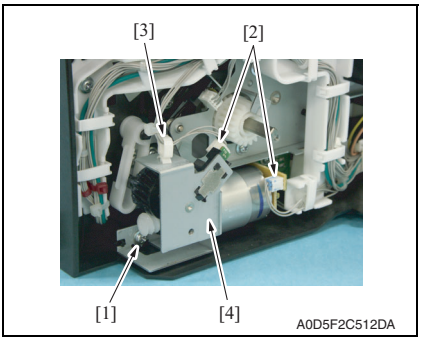

4. Remove the screw [1], disconnect two connectors [2] and the harness from the wire saddle [3], and remove the route change motor assy [3].

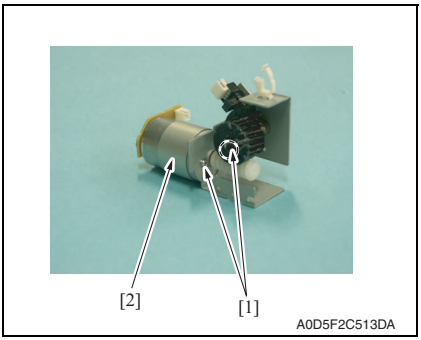

5. Remove two screws [1] and remove the route change motor [2].

6. Reinstall the above parts following the removal steps in reverse.

3.3.10 Shift motor (M2)

1. Remove the separator.
See P.5
2. Remove the front cover.
See P.6
3. Remove the route change motor.
See P.10

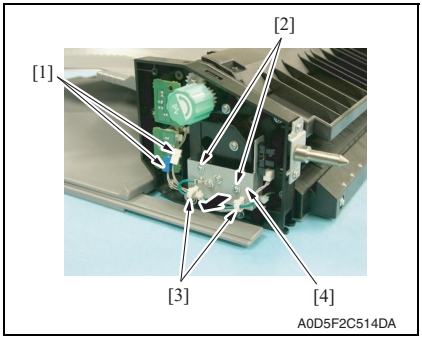

4. Disconnect two connectors [1], remove two screws [2] and remove the harness from the wire saddles [3]. Pull out the sensor assy [4] in the direction of the arrow.

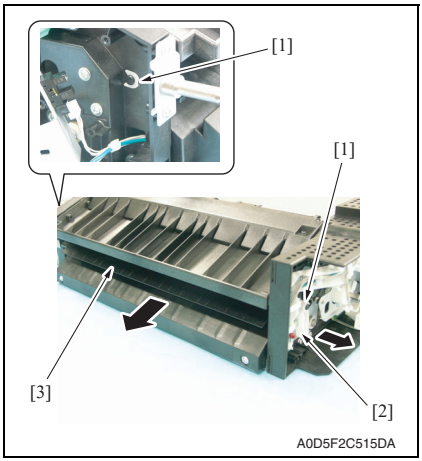

5. Remove two C-clips [1] and lever [2], and remove the route change guide [3].

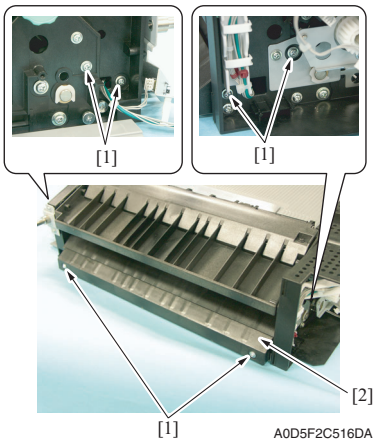

6. Remove six screws [1] and remove the transport guide/lower [2].

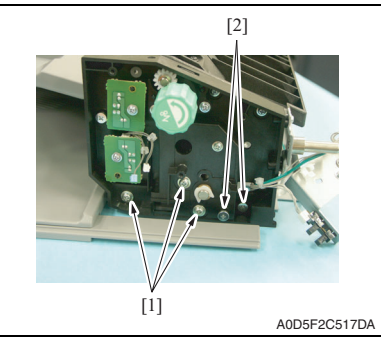

7. Remove three screws [1] and two shoulder screws [2].

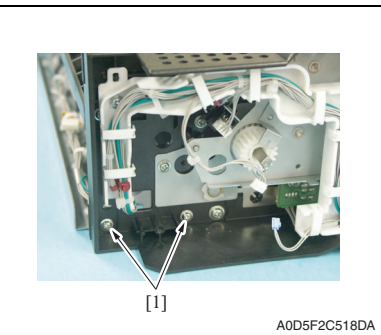

8. Remove two screws [1].

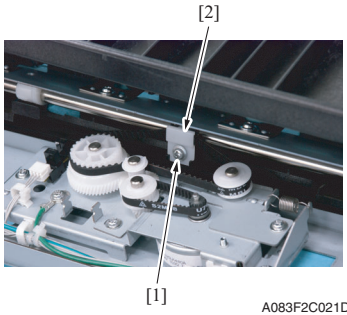

9. Remove the screw [1] and remove the belt fixed plate [2].

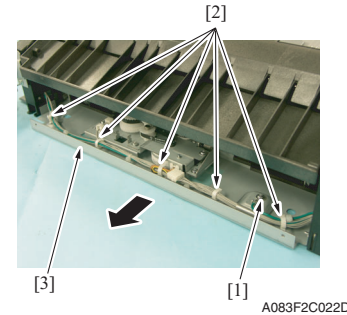

10. Remove the screw [1] and remove the ground terminal.
11. Remove the harness from five wire saddles [2] and pull out the shift drive section assy [3] in the direction of the arrow.

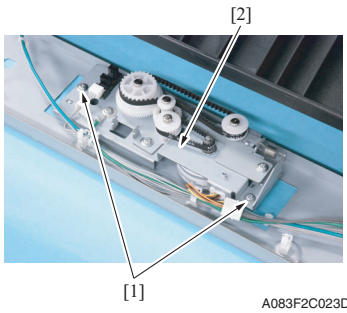

12. Remove two screws [1] and remove the shift motor assy [2].

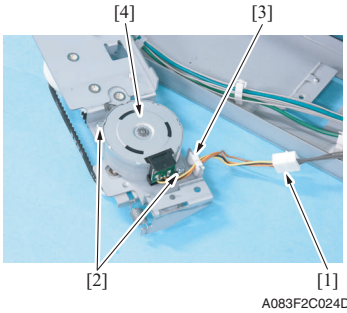

13. Disconnect the connector [1], remove two screws [2] and remove the harness from the wire saddle [3], and remove the shift motor [4].

Blank Page

KONICA MINOLTA

SERVICE MANUAL

FIELD SERVICE

ZU-606

2009.07

KONICA MINOLTA BUSINESS TECHNOLOGIES, INC. Ver. 1.0

Revision history

After publication of this service manual, the parts and mechanism may be subject to change for improvement of their performance.
Therefore, the descriptions given in this service manual may not coincide with the actual machine.

When any change has been made to the descriptions in the service manual, a revised version will be issued with a revision mark added as required.

Revision mark:

- To indicate clearly a section revised, is shown at the left margin of the revised section.
  The number inside represents the number of times the revision has been made.

- To indicate clearly a page that contains the revision, is shown near the page number of the corresponding page.
  The number inside represents the number of times the revision has been made.

NOTE

Revision marks shown in a page are restricted only to the latest ones with the old ones deleted.

- When a page revised in Ver. 2.0 has been changed in Ver. 3.0:
  The revision marks for Ver. 3.0 only are shown with those for Ver. 2.0 deleted.
- When a page revised in Ver. 2.0 has not been changed in Ver. 3.0:
  The revision marks for Ver. 2.0 are left as they are.

2009/07	1.0	—	Issue of the first edition
Date	Service manual Ver.	Revision mark	Descriptions of revision

CONTENTS

ZU-606

OUTLINE

1. PRODUCT SPECIFICATIONS 1

MAINTENANCE

2. PERIODICAL MAINTENANCE PROCEDURE 5
2.1 Punch section 5
2.1.1 Replacing the punch scraps conveyance motor (M7) 5
2.1.2 Replacing the punch clutch (CL1) 6
3. OTHER MAINTENANCE ITEM 8
3.1 Items not allowed to be disassembled and adjusted 8
3.2 Disassembly/reassembly parts list 10
3.3 Disassembly/reassembly procedure 11
3.3.1 Rear cover 11
3.3.2 Upper cover 12
3.3.3 Right cover 12
3.3.4 Front cover 13
3.3.5 Z folding unit 14
3.3.6 Punch unit 17
3.3.7 Z folding/conveyance unit 18
3.3.8 Punch motor (M4) 20
3.3.9 Main motor (M6) 21
3.3.10 Registration motor (M1) 23
3.3.11 Punch shift motor (M5) 24
3.3.12 Main motor cooling fan (FM1) 25
3.3.13 ZU control board (ZUCB) 26
3.3.14 Paper size detect board (PSDTB) 26

ADJUSTMENT/SETTING

4. HOW TO USE THE ADJUSTMENT SECTION 27
5. MECHANICAL ADJUSTMENT 28
5.1 Gate solenoid/Lw adjustment 28
5.2 1st folding skew adjustment 29
5.3 2nd folding skew adjustment 31
5.4 2nd stopper position adjustment 32

Blank Page

OUTLINE

1. PRODUCT SPECIFICATIONS

A. Type

Type	Z-folding multi punching device

B. Functions

Punch	Punching method	Reciprocal punching method (punching each paper)
	No. of holes	Metric area : 2 holes/4 holes (switched automatically) Inch area : 2 holes/3 holes (switched automatically)
	Hole diameter	Metric area : 6.5 mm± 0.5 mm Inch area : 8.0 mm± 0.5 mm
	Hole position	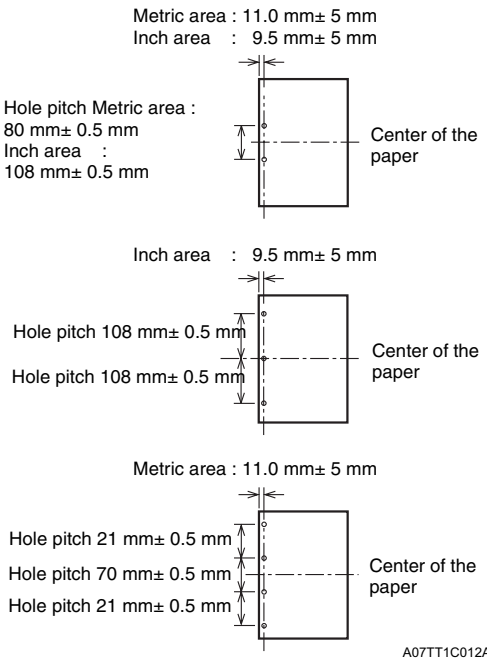
Folding method		Buckle folding method with the roller pair

Z-folding	Folding length	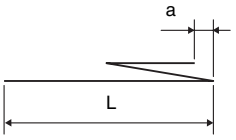 A07TT1C010AA Paper size / L (mm) / a (mm) A3 / 209 or less / 4 ± 2 B4 / 181 or less 11 x 17 / 215 or less 8K *1 / 194 or less *1: Only for the Taiwan market
	Folding precision	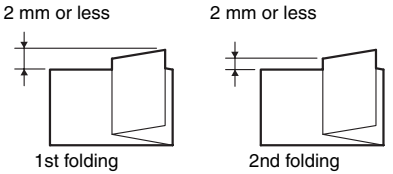 A07TT1C011AA
Folding	Folding length	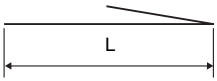 A07TT1C003AA Paper size / L (mm) 8-1/2 x 14 / 263 or less
	Folding precision	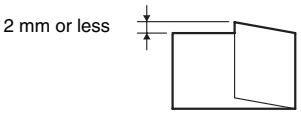 A07TT1C004AA

Maximum tray capacity (80 g/m²)	The maximum number of sheets for the FS main tray at the Z-folding operation • Z-folding continuous: Max. 30 sheets • Z-folding/stapling: See the table below

No. of sheets per staple		No. of set on the main tray
No. of fold sheets	No. of unfold sheets	
1 sheet	1 to 40 sheets	20 set
	41 to 90 sheets	10 set
2 sheets	1 to 80 sheets	10 set
3 sheets	1 to 70 sheets	4 set
4 sheets	1 to 60 sheets	3 set
5 sheets	1 to 50 sheets	2 set
6 sheets or greater	Not guaranteed	

C. Type of paper

No punch mode	Same as the main body.	
Punch mode	Paper size • Combination with the folding/saddle stitching mode is not available.	
	Metric area	2holes: A3, B4, A4, A4S, B5, B5S, A5, A5S, 8K *1, 16K *1, 16KS *1, 8 x 13, 8-1/2 x 13, 8-1/4 x 13, 8-1/8 x 13-1/4 4holes: A3, B4, A4, B5, 8K *1, 16K *1 *1: Only for the Taiwan market
	Inch area	2holes: 11 x 17, 8-1/2 x 14, 8-1/2 x 11, 8-1/2 x 11S, 5-1/2 x 8-1/2, 5-1/2 x 8-1/2S, 7-1/4 x 10-1/2 , 7-1/4 x 10-1/2S 3holes: 11 x 17, 8-1/2 x 11
	Type of paper	64 to 90 g/m² of the high-quality paper and the plain paper • Special paper is not guaranteed. The punching of label paper, tab paper, OHP paper, blueprint master and binding-holed paper are not allowed.
Z-folding mode	Paper size	A3, B4, 11 x 17, 8-1/2 x 14, 8K • For B4 paper (including the mix of the paper), the combination with the stapling mode is not available.
	Type of paper	64 to 90 g/m² of the high-quality paper and the plain paper • Special paper is not supported. Label paper, tab paper, transparency film, paper, holed paper, and low stiffness paper are not supported in Z-folding mode.
Folding mode	Paper size	8-1/2 x 14
	Type of paper	64 to 90 g/m² of the high-quality paper and the plain paper • Special paper is not supported. Label paper, tab paper, transparency film, paper, holed paper, and low stiffness paper are not supported in folding mode.

Paper curling	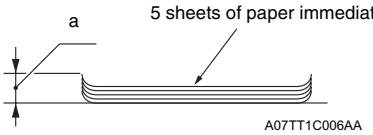 a : Excluding the OHP paper : Amount of curl: 15 mm or less OHP paper : Amount of curl: 10 mm or less

D. Maintenance

Maintenance	Same as the main body.
Machine service life	Same as the main body.

E. Machine specifications

Power requirements	100 to 240 VAC (automatic switching)
	DC5 V (supplied from the main body)
Max. power consumption	120 W or less
Dimensions	169 mm (W) x 660 mm (D) x 1027.5 mm (H) 6.65 inch (W) x 25.98 inch (D) x 40.45 inch (H)
Weight	45 kg (99.21 lb)

F. Operating environment

Temperature	10 to 30 °C
Humidity	15 to 85 % RH (with no condensation)

NOTE

- **These specifications are subject to change without notice.**

MAINTENANCE

2. PERIODICAL MAINTENANCE PROCEDURE

2.1 Punch section

2.1.1 Replacing the punch scraps conveyance motor (M7)

A. Periodical replaced parts/cycle

- Punch scraps conveyance motor: Every 1,000,000 counts

B. Procedure

1. Remove the Z folding unit.
See P.14

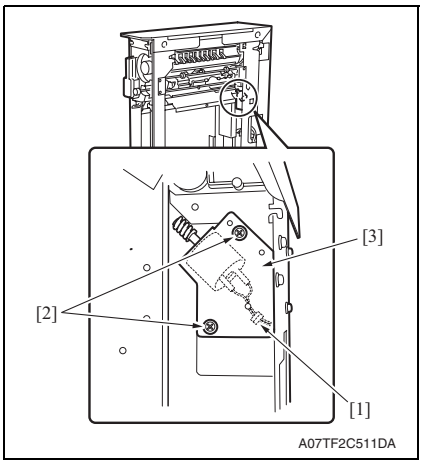

2. Disconnect the connector [1] and remove two screws [2], and remove the punch scraps conveyance motor assy [3].

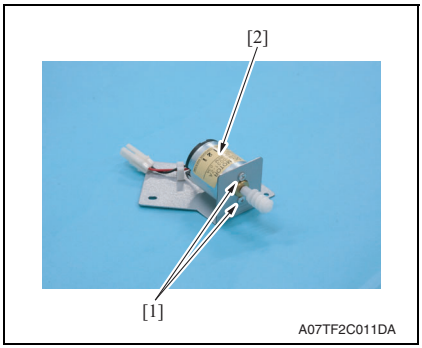

3. Remove two screws [1], and remove the punch scraps conveyance motor [2].

4. Reinstall the above parts following the removal steps in reverse.

2.1.2 Replacing the punch clutch (CL1)

A. Periodical replaced parts/cycle

- Punch clutch: Every 1,000,000 counts

B. Procedure

1. Remove the Z folding unit.
See P.14
2. Remove the punch unit.
See P.17

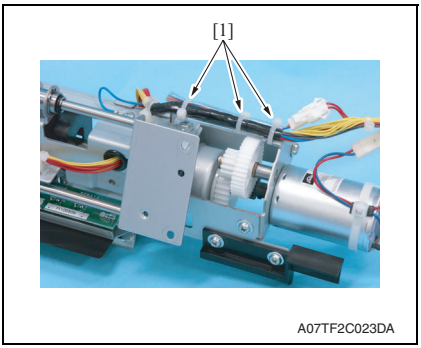

3. Cut three wiring harness bands [1].

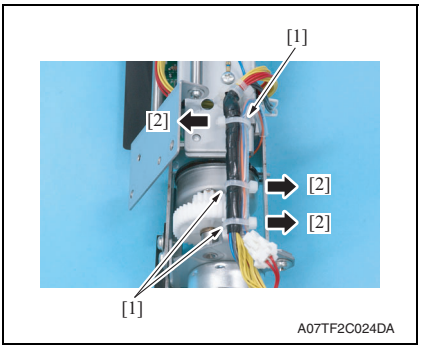

NOTE

- **When bind the wiring harness band [1], face them to the arrow-marked direction [2] to avoid the contact with the conveyance section of the main body.**

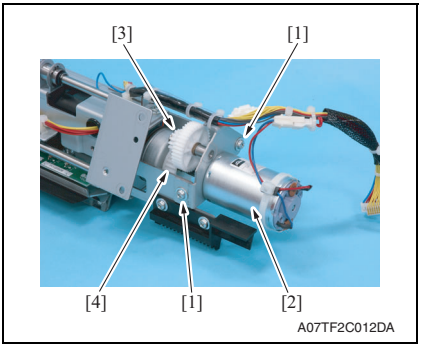

4. Remove two screws [1], and remove the punch motor assy [2].

NOTE

- **When reinstalling the punch motor assy [2], press the punch motor gear [3] to the gear [4]. Be sure to check that the gears rotate smoothly and there is appropriate backlash.**

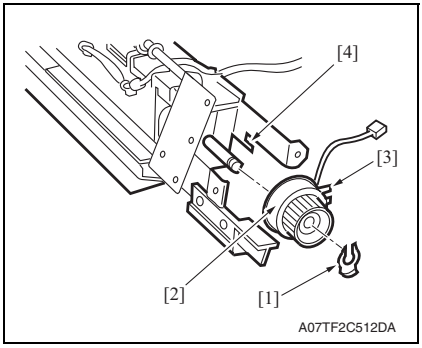

5. Remove the C-clip [1], and remove the punch clutch [2].

NOTE

- **When reinstalling punch clutch [2], be sure to check the stopper [3] is engaged with a projection [4] of metal plate.**

6. Reinstall the above parts following the removal steps in reverse.

3. OTHER MAINTENANCE ITEM

3.1 Items not allowed to be disassembled and adjusted

A. Paint-locked screws

NOTE

- **To prevent loose screws, a screw lock in blue or green series color is applied to the screws.**
- **The screw lock is applied to the screws that may get loose due to the vibrations and loads created by the use of machine or due to the vibrations created during transportation.**
- **If the screw lock coated screws are loosened or removed, be sure to apply a screw lock after the screws are tightened.**

B. Red-painted screws

NOTE

- **The screws which are difficult to be adjusted in the field are painted in red in order to prevent them from being removed by mistake.**
- **Do not remove or loosen any of the red-painted screws in the field. It should also be noted that, when two or more screws are used for a single part, only one representative screw may be marked with the red paint.**

C. Variable resistors on board

NOTE

- **Do not turn the variable resistors on boards for which no adjusting instructions are given in Adjustment/Setting.**

D. Removal of PWBs

⚠ CAUTION

- **When removing a circuit board or other electrical component, refer to "Handling of PWBs" and follow the corresponding removal procedures.**
- **The removal procedures given in the following omit the removal of connectors and screws securing the circuit board support or circuit board.**
- **Where it is absolutely necessary to touch the ICs and other electrical components on the board, be sure to ground your body.**

E. Parts not allowed to be removed

(1) Punch section

- The precision of the punch edges is ensured in the punch unit. The normal punch operation may be affected if it is disassembled. Never loosen or remove these screws and retaining rings.

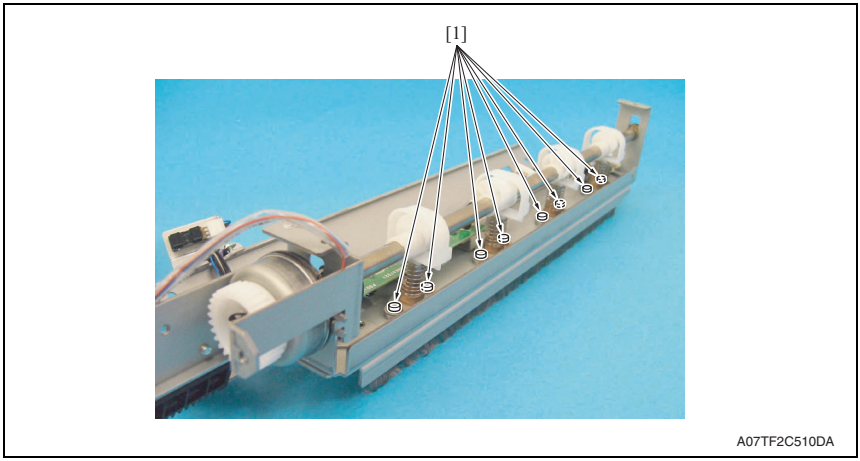

[1] Screws not allowed to be removed

(2) Z-folding section

- The screws position the clearance of the conveyance guide plate. The precision of the Z-folding may be affected if it is disassembled. Never loosen or remove these screws.

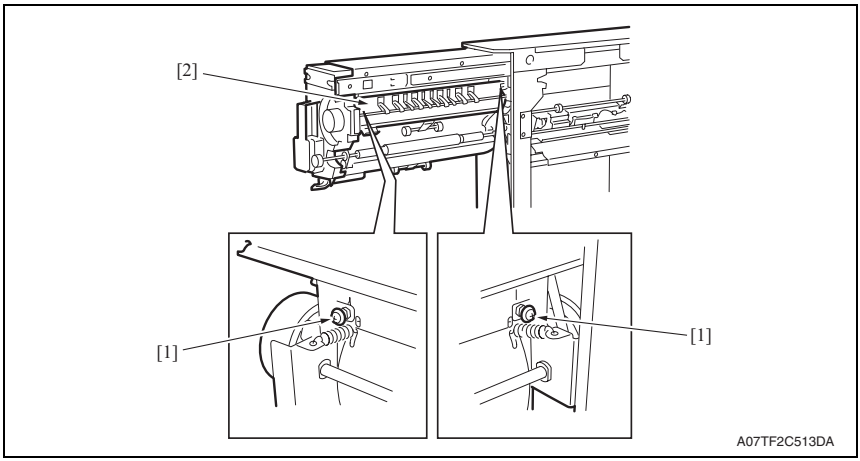

[1] Screws not allowed to be removed [2] Conveyance guide plate

3.2 Disassembly/reassembly parts list

Section	Part name	Ref. page
Exterior parts	Rear cover	P.11
	Upper cover	P.12
	Right cover	P.12
	Front cover	P.13
Units	Z folding unit	P.14
	Punch unit	P.17
	Z folding/conveyance unit	P.18
Electrical parts	Punch motor (M4)	P.20
	Main motor (M6)	P.21
	Registration motor (M1)	P.23
	Punch shift motor (M5)	P.24
	Main motor cooling fan (FM1)	P.25
	ZU control board (ZUCB)	P.26
	Paper size detect board (PSDTB)	P.26

3.3 Disassembly/reassembly procedure

3.3.1 Rear cover

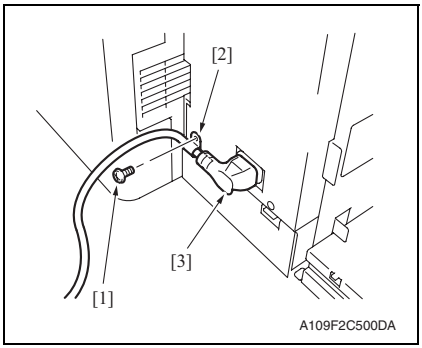

1. Remove the screw [1] and the clamp [2], and remove the power cord [3].

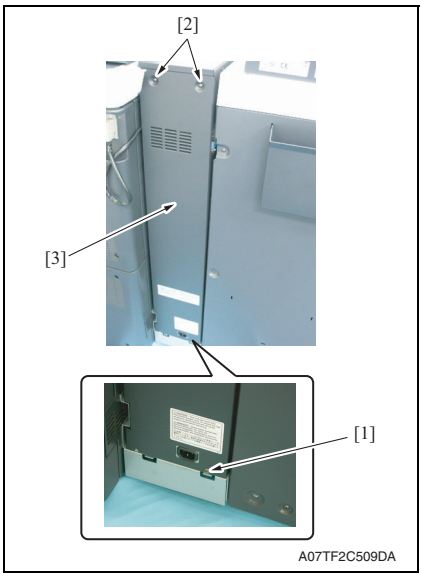

2. Loosen the screw [1], and remove two screws [2], and remove the rear cover [3].

3. Reinstall the above parts following the removal steps in reverse.

3.3.2 Upper cover

1. Remove the Z folding unit.
See P.14

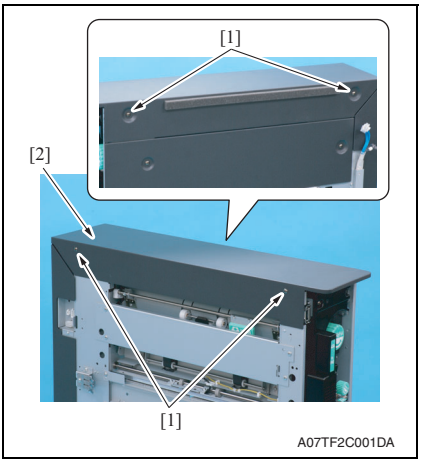

2. Remove four screws [1], and remove the upper cover [2].

3. Reinstall the above parts following the removal steps in reverse.

3.3.3 Right cover

1. Remove the Z folding unit.
See P.14

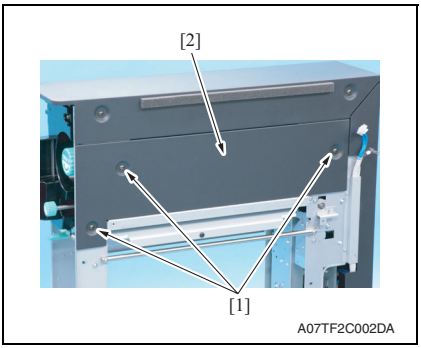

2. Remove three screws [1], and remove the right cover [2].

3. Reinstall the above parts following the removal steps in reverse.

3.3.4 Front cover

1. Remove the Z folding unit.
See P.14

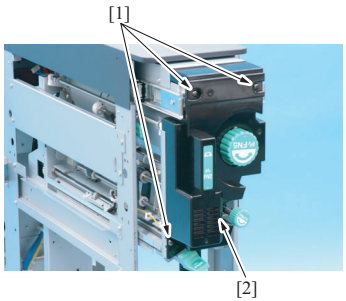

2. Remove three screws [1], and remove the front cover [2].

3. Reinstall the above parts following the removal steps in reverse.

3.3.5 Z folding unit

A. Removal from the finisher

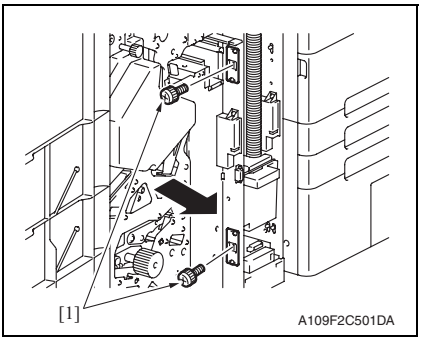

1. Open the front door of finisher [1].
2. Remove two screws [2] and slide the finisher as shown in the illustration.

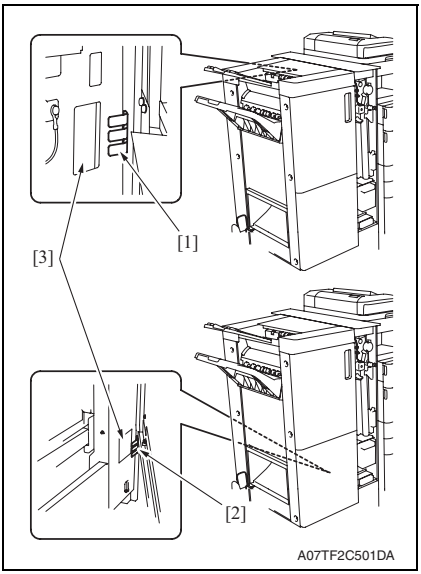

NOTE

- **To mount the finisher, align the hook portions of the mounting bracket [1] and [2] with the upper and lower holes [3] in the finisher. Then, push the finisher toward the rear.**

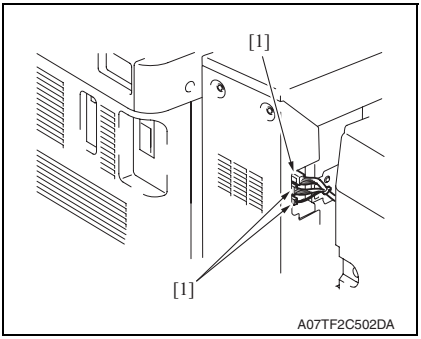

3. Disconnect three connectors [1] and remove the finisher.

4. Reinstall the above parts following the removal steps in reverse.

B. Removal from the main body

1. Remove the finisher.
See P.14

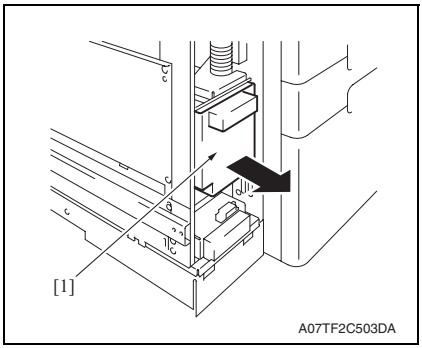

2. Remove the punch waste box [1].

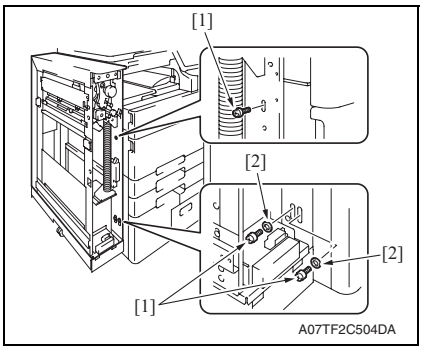

3. Remove three screws [1] and two washers [2].

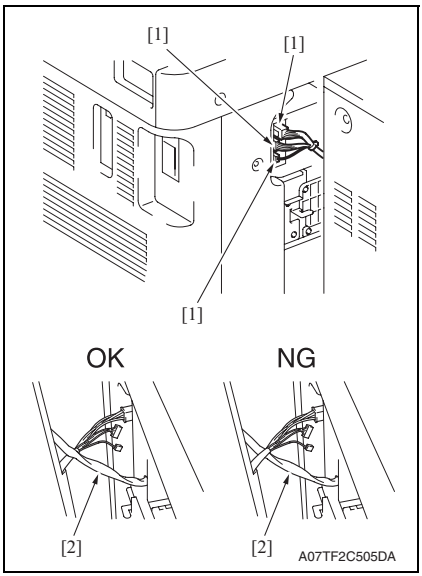

4. Disconnect three connectors [1].

NOTE

- **When reconnecting the connectors, make sure that the harness of the Z folding unit is placed below the cable [2] of the horizontal transport unit.**

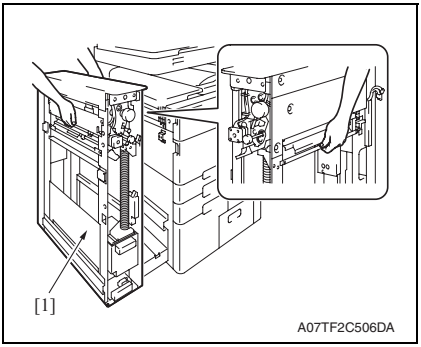

5. Remove the Z folding unit [1].

⚠ CAUTION

- **Make available collective manpower of an appropriate size for transporting the machine.**

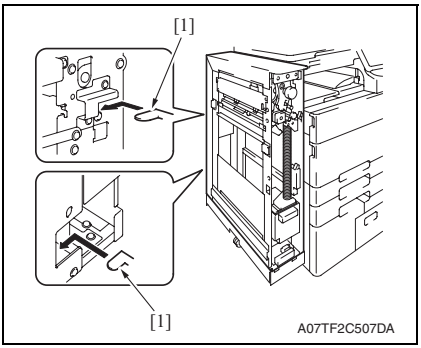

NOTE

- **When reinstalling the Z folding unit, use the upper/lower brackets [1] as a guide for positioning the Z folding unit.**

6. Reinstall the above parts following the removal steps in reverse.

3.3.6 Punch unit

1. Remove the Z folding unit.
See P.14
2. Remove the rear cover.
See P.11
3. Remove the right cover.
See P.12

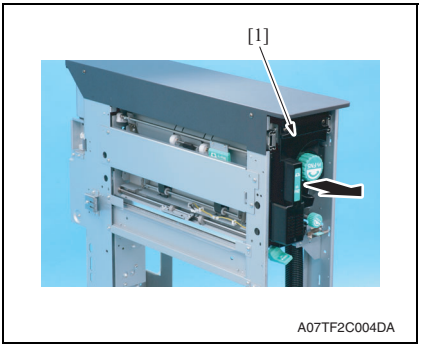

4. Pull out the Z folding/conveyance unit [1].

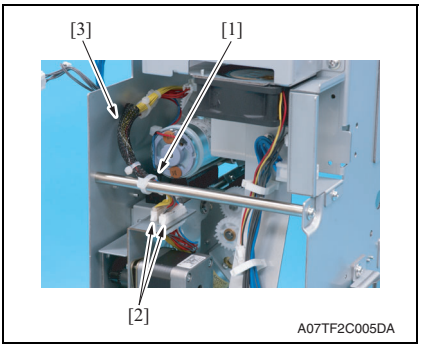

5. Cut the wiring harness band [1], and disconnect two connectors [2].

NOTE

- **When bind the wiring harness band [1], be sure to bind it so that the wiring harness [3] passes the wiring harness band [1] from left to right from the view of the rear.**
- **Be sure to bind the wiring harness band [1] with sufficient length of the wiring harness [3] when the punch unit move to forward.**

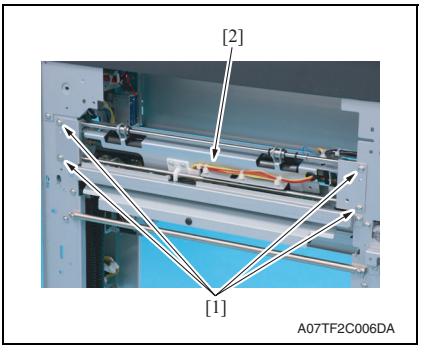

6. Remove four screws [1], and remove the punch unit [2].

7. Reinstall the above parts following the removal steps in reverse.

3.3.7 Z folding/conveyance unit

1. Remove the Z folding unit.
See P.14
2. Remove the upper cover.
See P.12

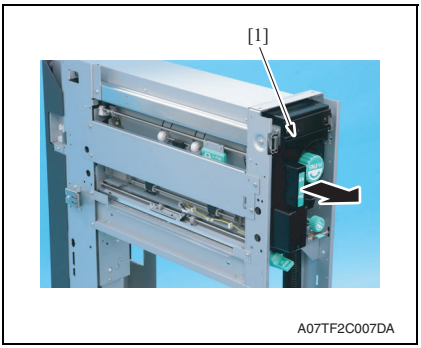

3. Pull out the Z folding/conveyance unit [1].

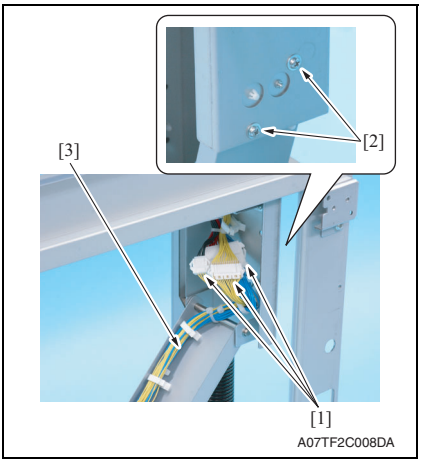

4. Disconnect three connectors [1]and remove two screws [2], and remove the arm [3].

5. Reinstall the Z folding/conveyance unit back again.

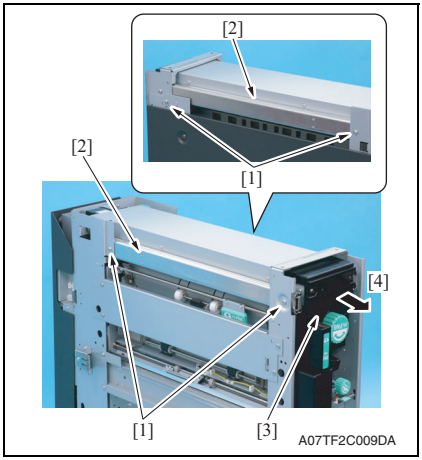

6. Remove four screws [1], and remove Z-folding/conveyance unit [3] to the front [4] by holding the rails [2] at the both sides.

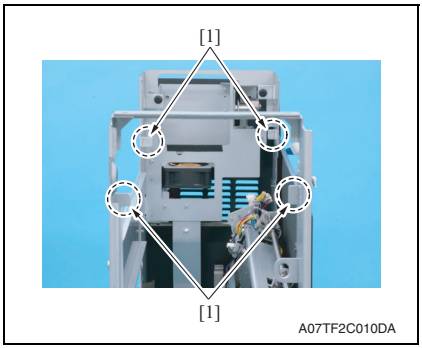

NOTE

- **When placing the Z-folding/conveyance unit, place it on the flat surface with its top or left side down.**
- **When reinstalling the Z-folding/conveyance unit, be sure to place the rails on the rail holders [1] at four positions.**

7. Reinstall the above parts following the removal steps in reverse.

3.3.8 Punch motor (M4)

1. Remove the Z folding unit.
See P.14
2. Remove the punch unit.
See P.17

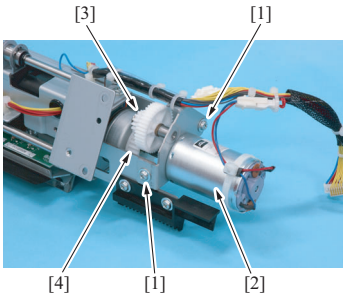

3. Remove two screws [1], and remove the punch motor assy [2].

NOTE

- **When reinstalling the punch motor assy [2], press the punch motor gear [3] to the gear [4]. Be sure to check that the gears rotate smoothly and there is appropriate backlash.**

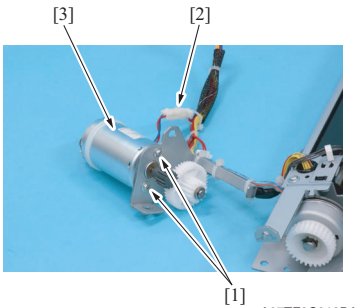

4. Remove two screws [1] and disconnect the connector [2], and remove the punch motor [3].

5. Reinstall the above parts following the removal steps in reverse.

3.3.9 Main motor (M6)

1. Remove the Z folding unit.
See P.14
2. Remove the upper cover.
See P.12

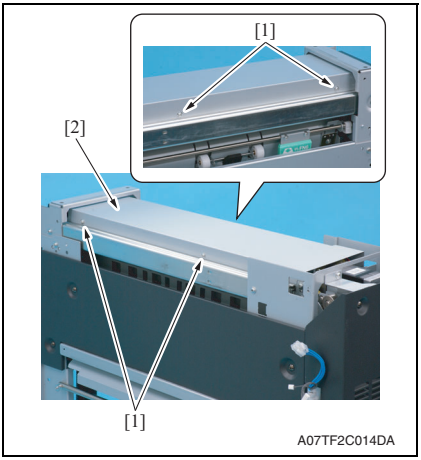

3. Remove four screws [1], and remove the conveyance upper cover [2].

4. Remove the Z folding/conveyance unit.
See P.18

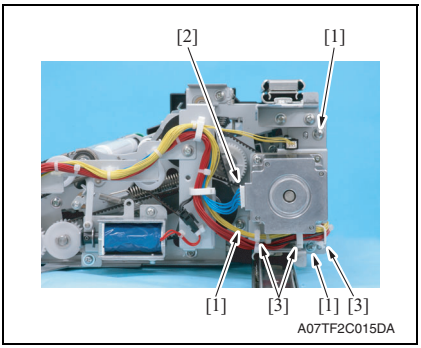

5. Remove three screws [1], and disconnect the connector [2], and remove the harness from three wire saddles [3].

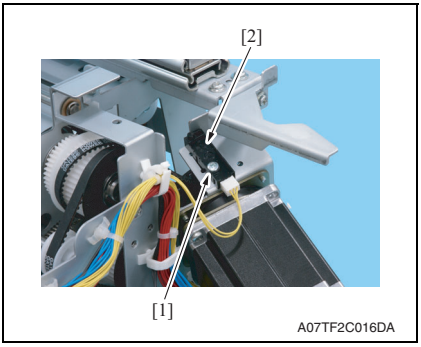

6. Remove the screw [1], and remove the conveyance encoder sensor (PS10) [2].

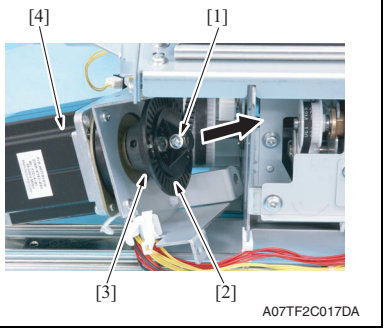

7. Remove the screw [1], the slit circular disc [2] and the belt [3], and remove the main motor assy [4]

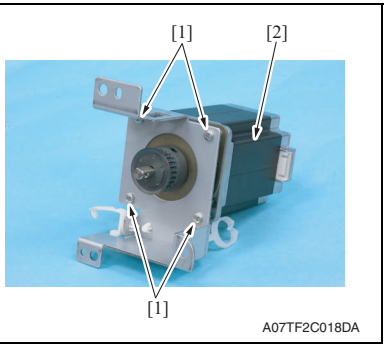

8. Remove four screws [1], and remove the main motor [2].

9. Reinstall the above parts following the removal steps in reverse.

3.3.10 Registration motor (M1)

1. Remove the Z folding unit.
See P.14

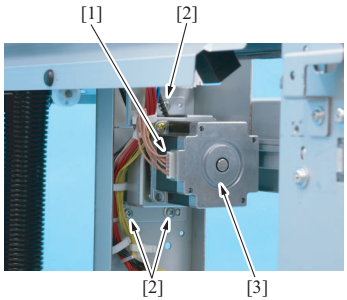

A07TF2C019DA

2. Disconnect the connector [1], and remove three screws [2], and remove the registration motor assy [3].

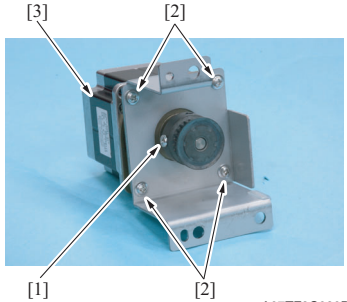

A07TF2C020DA

3. Remove the screw [1].
4. Remove four screws [2], and remove the registration motor [3].

5. Reinstall the above parts following the removal steps in reverse.

3.3.11 Punch shift motor (M5)

1. Remove the Z folding unit.
See P.14
2. Remove the rear cover.
See P.11

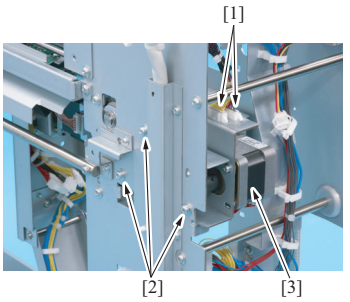

3. Disconnect two connectors [1] and remove three screws [2], and remove the punch shift motor assy [3].

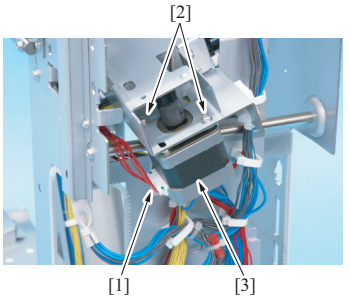

4. Disconnect the connector [1] and remove two screws [2], and remove the punch shift motor [3].

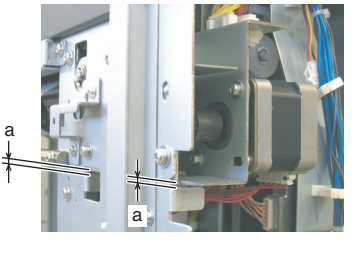

NOTE

- **When installing the punch shift motor assy, adjust its position so that there is a clearance of "a", as specified below, at the front and rear sides and make sure that the motor assy is horizontal.**
  Adjustment value: "a" = 2 mm

5. Reinstall the above parts following the removal steps in reverse.

3.3.12 Main motor cooling fan (FM1)

1. Remove the Z folding unit.
See P.14
2. Remove the rear cover.
See P.11
3. Remove the upper cover.
See P.12

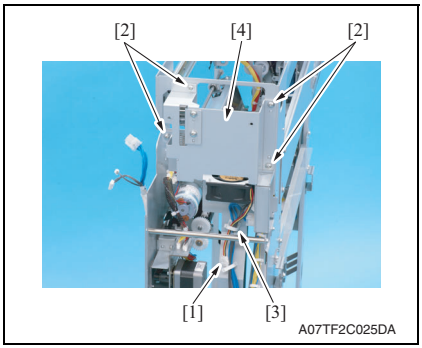

4. Disconnect the connector [1], and remove four screws [2], and remove the harness from wire saddle [3], and remove the main motor cooling fan assy [4].

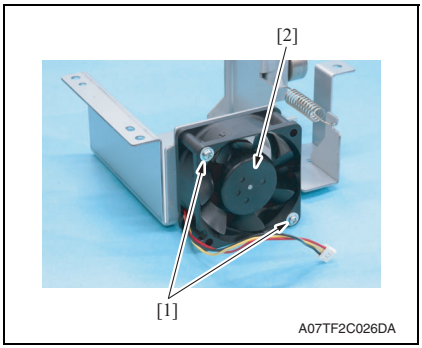

5. Remove two screws [1], and remove the main motor cooling fan [2].

6. Reinstall the above parts following the removal steps in reverse.

3.3.13 ZU control board (ZUCB)

1. Remove the Z folding unit.
See P.14
2. Remove the punch unit.
See P.17

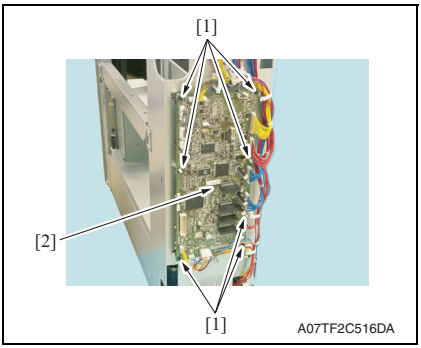

3. Disconnect all thirteen connectors from the ZU control board.
4. Remove seven board supports [1], and remove the ZU control board [2].
5. Reinstall the above parts following the removal steps in reverse.

3.3.14 Paper size detect board (PSDTB)

1. Remove the Z folding unit.
See P.14
2. Remove the punch unit.
See P.17

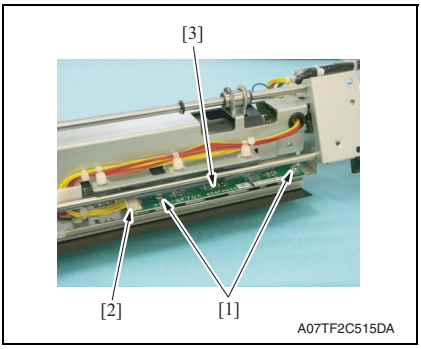

3. Remove two screws [1], and disconnect the connector [2], and remove the paper size detect board [3].
4. Reinstall the above parts following the removal steps in reverse.

ADJUSTMENT/SETTING

4. HOW TO USE THE ADJUSTMENT SECTION

- "Adjustment/Setting" contains detailed information on the adjustment items and procedures for this machine.
- Throughout this "Adjustment/Setting," the default settings are indicated by " ".

Advance checks

Before attempting to solve the customer problem, the following advance checks must be made. Check to see if:

- The power supply voltage meets the specifications.
- The power supply is properly grounded.
- The machine shares the power supply with any other machine that draws large current intermittently (e.g., elevator and air conditioner that generate electric noise).
- The installation site is environmentally appropriate: high temperature, high humidity, direct sunlight, ventilation, etc.; levelness of the installation site.
- The original has a problem that may cause a defective image.
- The density is properly selected.
- The original glass, slit glass, or related part is dirty.
- Correct paper is being used for printing.
- The units, parts, and supplies used for printing (developer, PC drum, etc.) are properly replenished and replaced when they reach the end of their useful service life.
- Toner is not running out.

⚠ CAUTION

- **To unplug the power cord of the machine before starting the service job procedures.**
- **If it is unavoidably necessary to service the machine with its power turned ON, use utmost care not to be caught in the scanner cables or gears of the exposure unit.**
- **Special care should be used when handling the fusing unit which can be extremely hot.**
- **The developing unit has a strong magnetic field. Keep watches and measuring instruments away from it.**
- **Take care not to damage the PC drum with a tool or similar device.**
- **Do not touch IC pins with bare hands.**

5. MECHANICAL ADJUSTMENT

5.1 Gate solenoid/Lw adjustment

- Make this adjustment when the gate solenoid/Lw (SD1) is replaced with a new one.

1. Remove the Z folding unit.
See P.14
2. Remove the front cover.
See P.13
3. Pull out the Z folding/conveyance unit.

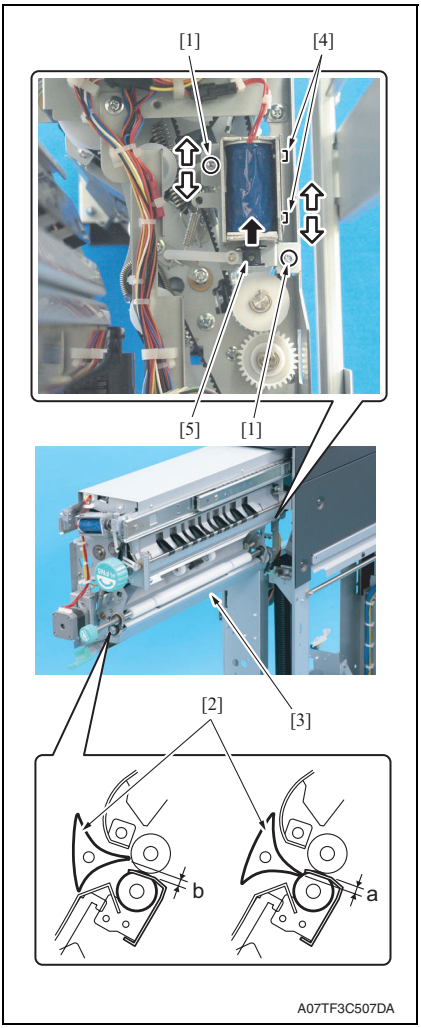

4. Loosen two screws [1] and then visually adjust so that the gate/Lw [2] maintains the standard value a relative to the guide plate [3]. Then, tighten the two screws [1].
Standard value: a = 3 mm to 5 mm
5. Loosen two screws [4] and adjust the gate /Lw [2] so that the clearance between the gate /Lw [2] and the guide plate [3] gets to the standard value “b” while gate solenoid/Lw turns ON and the plunger [5] is pulled, and then tighten two screws [4].
Standard value: b = 2 mm to 4.6 mm

5.2 1st folding skew adjustment

- Conduct the 1st folding skew adjustment when the skew of the 1st folding is not within the standard value.

NOTE

- **This adjustment affects the 1st Z-fold position. Be sure therefore to perform [1st Z-fold Position] of the service mode whenever this adjustment has been completed.**
  See P.605 of the main body service manual.

1. Remove the upper cover.
   See P.12

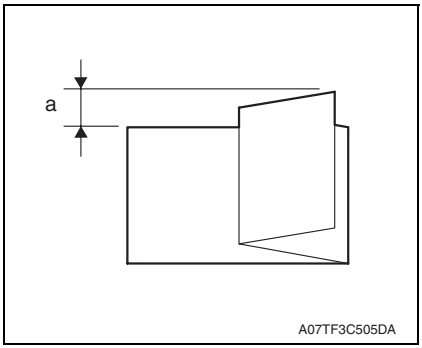

2. Perform the Z-folding printing operation on A3 or 11 x 17 paper and check to see if the skew of the 1st folding is within the standard value "a".
   Standard value: a = 2 mm or less
   When the value is not within the standard value, perform the following procedure.

3. Open the front door, and pull out the Z folding/conveyance unit.

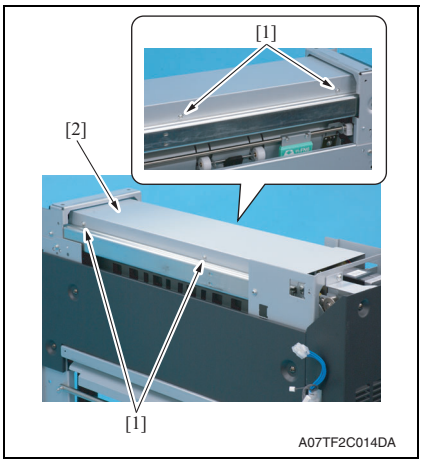

4. Remove four screws [1], and remove the conveyance upper cover [2].

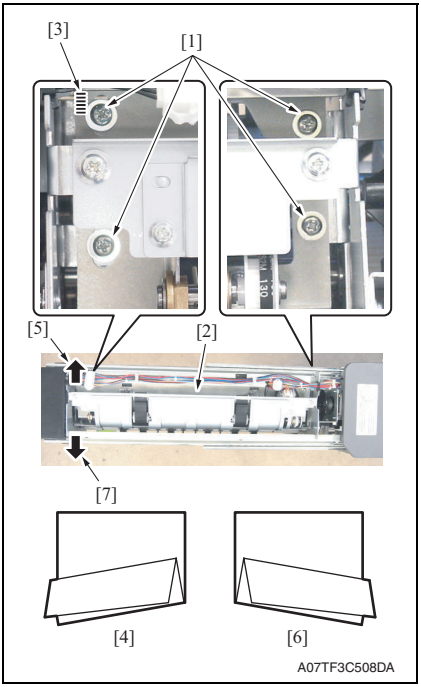

5. Loosen four screws [1].
6. Adjust the 1st stopper assembly [2] by moving the front side of the assembly to right and left by referring to the markings [3], and then tighten the four screws [1].

- **When the skew pattern is [4], move the front side of the 1st stopper assembly [2] to the left [5].**
- **When the skew pattern is [6], move the front side of the 1st stopper assembly [2] to the right [7].**

7. Replace the Z folding/conveyance unit, and then perform the Z-folding printing operation and check to see if the skew of the 1st folding is within the standard value.
8. Repeat steps 5 to 7 until the standard value can be obtained.

5.3 2nd folding skew adjustment

- Conduct the 2nd folding skew adjustment when the skew of the 2nd folding is not within the standard value.

NOTE

- **This adjustment affects the 2nd Z-fold position. Be sure therefore to perform [2nd Z-fold Position] of the service mode whenever this adjustment has been completed.**

See P.605 of the main body service manual.

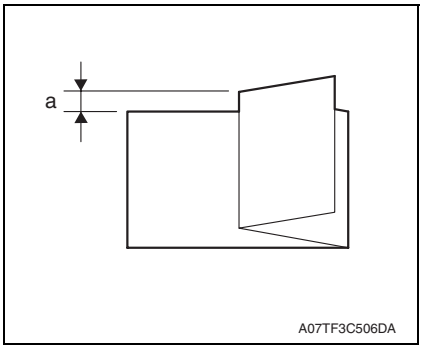

1. Perform the Z-folding printing operation on A3 or 11 x 17 paper and check to see if the skew of the 2nd folding is within the standard value "a".
   Standard value: a = 2 mm or less
   When the value is not within the standard value, perform the following procedure.

2. Open the front door, and pull out the Z folding/conveyance unit.

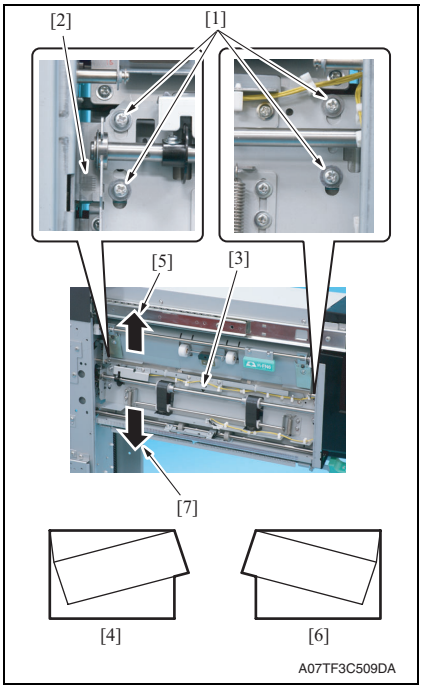

3. Loosen four screws [1].
4. Adjust the 2nd stopper assembly [3] by moving it vertically by referring to the markings [2], and then tighten the four screws [1].
   - When the skew pattern is [4], move the back side of the 2nd stopper assembly [3] upward [5].
   - When the skew pattern is [6], move the back side of the 2nd stopper assembly [3] downward [7].
5. Replace the Z-folding/conveyance unit, and then perform the Z-folding printing operation and check to see if the skew of the 2nd folding is within the standard value.
6. Repeat steps 4 to 6 until the standard value can be obtained.

5.4 2nd stopper position adjustment

- Conduct this adjustment when the 2nd folding position cannot be adjusted from the service mode or the skew of the 2nd folding cannot be adjusted by the procedure in “6.3 2nd folding skew adjustment.”

NOTE

This adjustment affects the 2nd Z-fold amount and 2nd Z-fold position. Be sure therefore to perform the following adjustment procedure whenever this adjustment has been completed.

- **2nd folding skew adjustment**
  See P.31
- **[2nd Z-fold Position] of the service mode**
  See P.605 of the main body service manual.

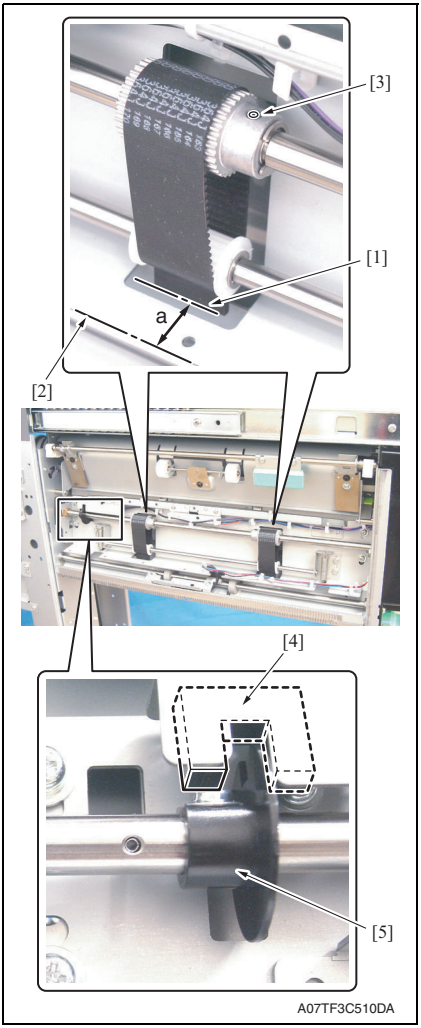

1. Conduct the Z-folding printing operation to move the 2nd stopper [1] to the home position, and then turn OFF the main power switch of the main body.
2. Open the front door, and pull out the Z folding/conveyance unit.
3. Check to see if the distance between the 2nd stopper [1] and inside edge of the guide plate [2] is within a standard value.
   Standard value: a = 20 ± 0.5 mm
4. When the value is not within the standard value, perform the following procedure.
5. Loosen two screws [3] with the hex wrench, and then adjust the distance between the 2nd stopper [1] and the inside of the guide plate [2] so that it gets to the standard value a.

NOTE

- **Be sure not to rotate the actuator [5] of the 2nd stopper home sensor [4] during the adjustment. It may be moved from the home position.**
- **Conduct the following steps 6 to 14 only if you cannot reach to the screws [3] with the hex wrench when they are located in side of the 2nd stopper assembly.**

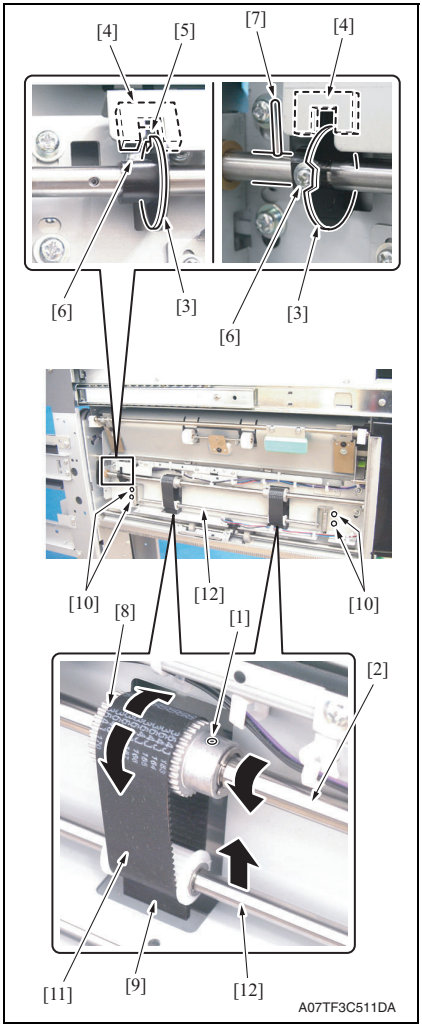

6. Rotate the shaft [2] so that you can reach to two screws [1] with the hex wrench.
7. Loosen two screws [1].
8. Rotate the shaft [2] so that the actuator [3] is roughly positioned to the home position [5] of the 2nd stopper home sensor [4].

NOTE

- **Never remove the screw [6] from the actuator [3].**
- **At the appropriate position, the anti-rotation pin [7] points upward when the actuator [3] faces to the left.**

9. Rotate the pulley [8] to move the 2nd stopper [9] to the position within the standard value.
10. Loosen four screws [10].
11. Lift up the shaft [12] upward enough to remove the belt [11] from the pulley [8], and then rotate the pulley [8] without moving the shaft [2] and the 2nd stopper [9] so that the screw [1] faces outside.
12. Tighten two screws [1].
13. Tighten four screws [10].

NOTE

- **Before tightening the screws [10], be sure to check the tension is exerted on two belts [11].**

14. Repeat the steps 3 to 5 to adjust the 2nd stopper to the position within the standard value.

Blank Page

KONICA MINOLTA

SERVICE MANUAL

FIELD SERVICE

FS-526

2009.07

KONICA MINOLTA BUSINESS TECHNOLOGIES, INC. Ver. 2.0

Revision history

After publication of this service manual, the parts and mechanism may be subject to change for improvement of their performance.
Therefore, the descriptions given in this service manual may not coincide with the actual machine.

When any change has been made to the descriptions in the service manual, a revised version will be issued with a revision mark added as required.

Revision mark:

- To indicate clearly a section revised, △1 is shown at the left margin of the revised section.
  The number inside △1 represents the number of times the revision has been made.

- To indicate clearly a page that contains the revision, ▲1 is shown near the page number of the corresponding page.
  The number inside ▲1 represents the number of times the revision has been made.

NOTE

Revision marks shown in a page are restricted only to the latest ones with the old ones deleted.

- When a page revised in Ver. 2.0 has been changed in Ver. 3.0:
  The revision marks for Ver. 3.0 only are shown with those for Ver. 2.0 deleted.
- When a page revised in Ver. 2.0 has not been changed in Ver. 3.0:
  The revision marks for Ver. 2.0 are left as they are.

Date	Service manual Ver.	Revision mark	Descriptions of revision
2009/07	2.0	△1	Error correction
2009/01	1.0	—	Issue of the first edition

CONTENTS

FS-526

OUTLINE

1. PRODUCT SPECIFICATIONS 1

MAINTENANCE

2. PERIODICAL MAINTENANCE PROCEDURE 5
2.1 Paper exit section 5
2.1.1 Cleaning procedure for each parts 5
2.1.2 Replacing the paper exit roller/A 6
2.1.3 Replacing the stapler unit 7
2.1.4 Replacing the paddle/1 9
2.1.5 Replacing the paddle/2 10
3. OTHER MAINTENANCE ITEM 11
3.1 Disassembly/Adjustment prohibited items 11
3.2 Disassembly/reassembly parts list 12
3.3 Disassembly/reassembly procedure 13
3.3.1 Upper cover /1, Upper cover /2, Upper cover /3 13
3.3.2 Rear cover 14
3.3.3 Rear left cover 14
3.3.4 Front left cover 14
3.3.5 Right cover 15
3.3.6 Main tray (Paper exit lower tray) 15
3.3.7 Sub tray (Paper exit upper tray) 16
3.3.8 Finisher 17
3.3.9 Horizontal transport unit 18
3.3.10 FS control board 19
3.3.11 Transport control board (TRCB) 19
3.3.12 Transport motor/1 (M1) 20
3.3.13 Transport motor/2 (M2) 21
3.3.14 Bypass transport motor (M3) 22
3.3.15 Exit roller motor (M4) 23
3.3.16 Main tray lift motor (M5) 25
3.3.17 Paper output roller motor (M6) 26
3.3.18 Stacker entrance motor (M10) 26
3.3.19 2 staples stapler movement motor (M13) 27

3.3.20 Trail edge paddle motor (M15) 28
3.3.21 Paddle motor (M16) 28
3.3.22 Stacker plate motor (M17) 30
3.3.23 Rewind paddle motor (M18) 31
3.3.24 Sub tray paper exit route 33
3.3.25 Route change gate solenoid (SD1) 35
3.3.26 Sub tray gate solenoid (SD3) 37
3.3.27 Switch back solenoid (SD4) 37
3.3.28 Transport motor (M201) 38
3.3.29 Fan motor/1 (FM1) 39
3.3.30 Fan motor/2 (FM2) 40
3.3.31 Lift wire 41

OUTLINE

1. PRODUCT SPECIFICATIONS

A. Type

Name	Flat-stapling finisher: 100 sheets staple
Type	Staple finisher attached to the side of the main body
Installation	Including horizontal transport unit (Built-in finisher that is mounted from the left of the main body)
Document alignment	Center
Consumables	Staples

B. Functions

Modes	Non-sort, sort, offset, group offset, sort staple

C. Stapling

Max. flat-stapling capacity	64 to 80 g/m²: 100 sheets or 94 sheets + 2 sheets (209 g/m²) *2	
	81 to 90 g/m²: 30 sheets or 28 sheets + 2 sheets (209 g/m²) *1	
	91 g/m² or more: 2 sheets of thick paper or more not guaranteed	
Max. stapling capacity for different paper sizes	100 sheets	B5 to A4S, 8 1/2 x 11S (Paper length: 150 to 300 mm)
	70 sheets	B5 recycled paper 1-sided mode
	65 sheets	B4S/8 1/2 x 14S (Paper length: 389 mm or less)
	50 sheets	Paper sizes other than the above (Paper length: 150 mm or less, 390 mm or more) *1, *2
Stapling position	Back of the corner (0 to 45 degrees) Front of the corner (0 to 45 degrees) Center staple two points (Staple interval is fixed to 145 mm.)	
Stapling method	Bypass flat clinch	

*1: The stapling capacity for colored paper and enamel paper is 35 sheets (recommended paper).

*2: And the stapling thickness is 10 mm or less and the stack thickness including curl is 25 mm or less.

D. Max. paper capacity

<table>
<tr><td rowspan="4">Main tray
(80 g/m²)</td><td rowspan="4">Non-sort, sort, offset,
group offset,</td><td colspan="3">3,000 sheets :A4/A4S, B5/B5S, 8 1/2 x 11/
8 1/2 x 11S, 16K/16KS,
7 1/4 x 10 1/2 /7 1/4 x 10 1/2 S
1,500 sheets :A3, B4, 8 x 13, 8 1/4 x 13,
8 1/2 x 13, 8 1/2 x 13 1/4,
8 1/2 x 13 1/2, 12 x 8, 11 x 17,
8 1/2 x 14, 8K
Wide size paper (Max. : 320 mm X 450 mm)
500 sheets :A5/A5S, B6S, A6S, 5 1/2 x 8 1/2 /
5 1/2 x 8 1/2 S</td></tr>
<tr><td>No. of sheets in offset mode</td><td>Size in the sub scan direction is 150 to 417 mm or longer</td><td>The others</td></tr>
<tr><td>Set of 2 to 9 sheets</td><td colspan="2">100 copies 50 copies</td></tr>
<tr><td>Set of 10 sheets</td><td>50 copies</td><td>50 copies</td></tr>
<tr><td rowspan="8">Main tray</td><td rowspan="8">sort staple</td><td>No. of sheets per stapling</td><td>Size in the sub scan direction is 150 to 417 mm or longer</td><td>The others</td></tr>
<tr><td>2 to 9</td><td>100 copies</td><td>100 copies</td></tr>
<tr><td>10 to 20</td><td>50 copies</td><td>50 copies</td></tr>
<tr><td>21 to 30</td><td>30 copies</td><td>30 copies</td></tr>
<tr><td>31 to 40</td><td>25 copies</td><td>25 copies</td></tr>
<tr><td>41 to 50</td><td>20 copies</td><td>20 copies</td></tr>
<tr><td>51 to 60</td><td>15 copies</td><td>-</td></tr>
<tr><td>61 to 100</td><td>10 copies</td><td>-</td></tr>
<tr><td>Sub tray (80 g/m²)</td><td colspan="3">100 sheets</td></tr>
</table>

E. Type of paper

Size	A3, B4, A4/A4S, B5/B5S, A5/A5S, B6S, A6S, postcardS, 5 1/2 x 8 1/2, 5 1/2 x 8 1/2 S, 8 x 13, 8 1/4 x 13, 8 1/2 x 13, 8 1/8 x 13 1/4, 11 x 17, 8 1/2 x 14, 8 1/2 x 11, /8 1/2 x 11S, 7 1/4 x 10 1/2, 7 1/4 x 10 1/2 S, 8K, 16K/16KS Custom size paper, wide size paper, standard size index paper (Upon paper exit, only the leading edge side but not the trailing edge side is guaranteed.) Min. : 100 mm x 139 mm (4 inch x 5.5 inch) Max. : 311 mm x 488 mm (12.2 inch x 19.2 inch)
Type	Plain paper, bond paper, colored paper, coated paper, speciality paper defined in the main body specifications, and recommended paper are guaranteed.
Weight	60 to 300 g/m²

F. Machine specifications

Power requirements	DC 24 V (supplied from the main body)
	DC 5 V (supplied from the main body)
Max. power consumption	85 W or less
Dimensions	723.8 (W) x 709.5 (D) x 1025 (H) mm 28.45 (W) x 27.88 (D) x 40.28 (H) inch 848.8 (W) x 709.5 (D) x 1025 (H) mm * 33.35 (W) x 27.88 (D) x 40.28 (H) inch *
Weight	60 kg (132.24 lb)

*: Size when the paper output tray is pulled out

G. Operating environment

- Conforms to the operating environment of the main body.

Blank Page

MAINTENANCE

2. PERIODICAL MAINTENANCE PROCEDURE

2.1 Paper exit section

NOTE

- **The alcohol described in the cleaning procedure of maintenance represents the isopropyl alcohol.**

2.1.1 Cleaning procedure for each parts

A. Periodical cleaning parts/cycle

- Paper exit roller: Every 100,000 prints

B. Cleaning point

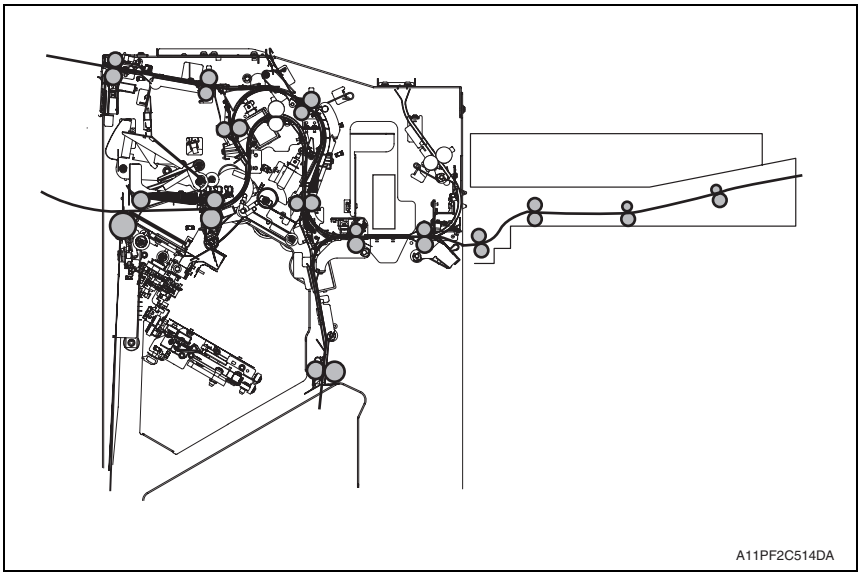

2.1.2 Replacing the paper exit roller/A

A. Periodically replaced parts/cycle

- Paper exit roller/A: Every 100,000 prints

NOTE

- **When replacing the paper exit rollers, be sure to replace all 3 pairs of rollers (6 rollers in all).**

B. Procedure

1. Turn ON the main power switch and the power switch of the main body.

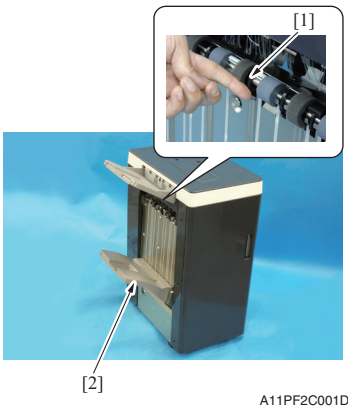

A11PF2C001DA

2. Push up the actuator [1] of the main tray top surface sensor (PS4) with your finger, and then lower the finishing main tray [2].

3. In the state of the finishing main tray being lowered, turn OFF the main and sub power switches and unplug the power cord from the power outlet.

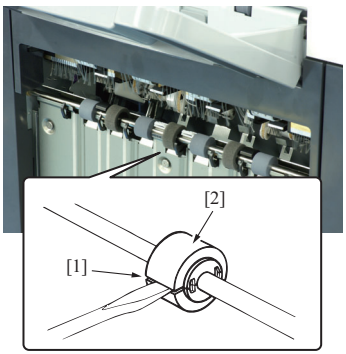

A11PF2C002DA

4. Insert a driver into the groove [1] of the paper exit roller and remove the paper exit roller/A [2] by prizing it open.

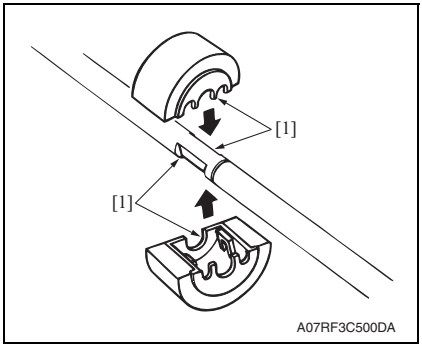

5. With each of the depressions [1] of a new paper exit roller and the shaft brought together, press the paper exit roller until it clicks to fit it in securely.

2.1.3 Replacing the stapler unit

A. Periodically replaced parts/cycle

- Stapler unit: Every 500,000 counts

B. Procedure

1. Open the finisher front door.

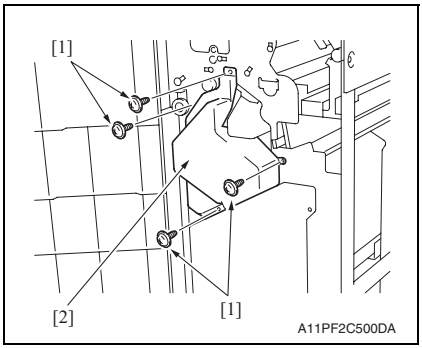

2. Remove four screws [1], and remove the staple unit cover [2].

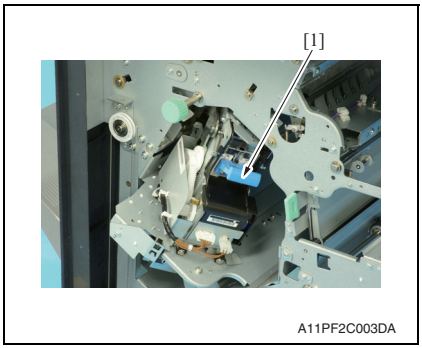

3. Remove the stapler [1].

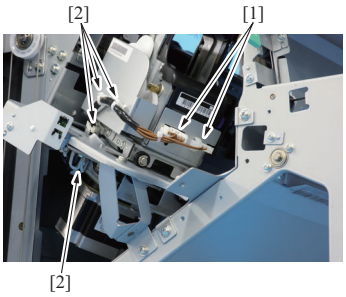

A11PF2C004DA

4. Disconnect two connectors [1].
5. Remove the harness from four wire saddles [2].

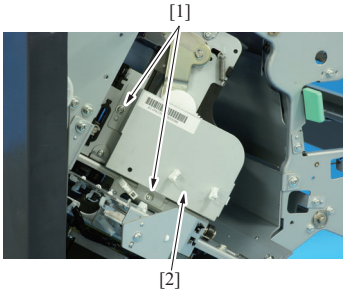

A11PF2C005DA

6. Remove two screws [1], and remove the plate [2].

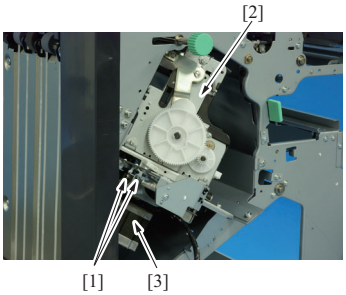

A11PF2C006DA

7. Remove two screws [1], and remove the stapler unit [2].

NOTE

- **When removing the stapler unit, support it with your hand to prevent the flat stitch stapling unit moving motor [3] from coming off and falling down.**

8. Reinstall the above parts following the removal steps in reverse.

2.1.4 Replacing the paddle/1

A. Periodically replaced parts/cycle

- Paddle/1: Every 100,000 prints

B. Procedure

1. Open the finisher front door.

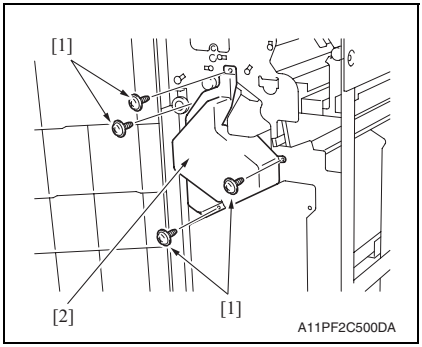

2. Remove four screws [1], and remove the staple unit cover [2].

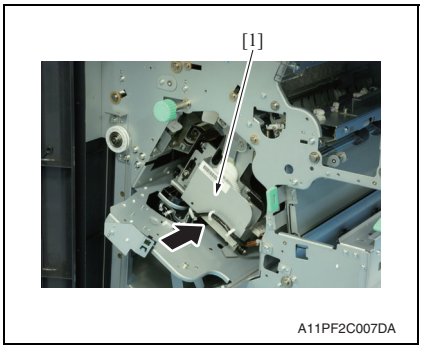

3. Move the stapler unit [1] to the rear of the finisher.

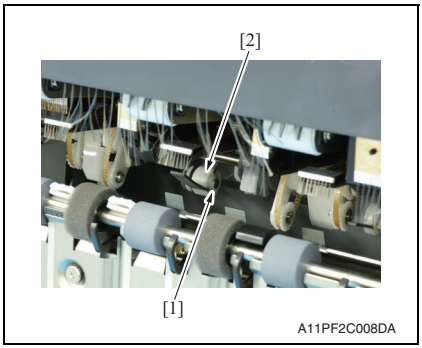

4. Remove the C-clip [1], and remove the paddle/1 [2].

5. Reinstall the above parts following the removal steps in reverse.

2.1.5 Replacing the paddle/2

A. Periodically replaced parts/cycle

- Paddle/2: Every 100,000 prints

B. Procedure

1. Open the finisher front door.

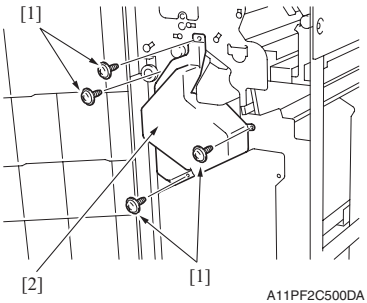

2. Remove four screws [1], and remove the staple unit cover [2].

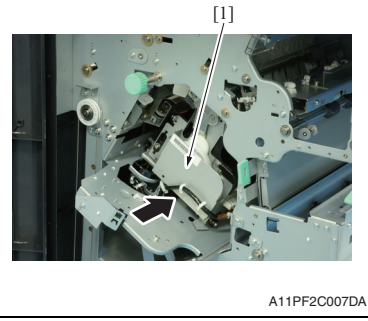

3. Move the stapler unit [1] to the rear of the finisher.

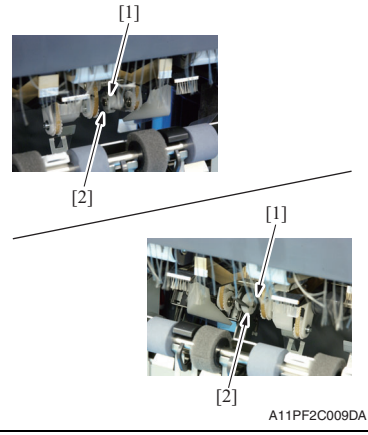

4. Remove two C-clips [1], and remove two paddle/2 [2].

5. Reinstall the above parts following the removal steps in reverse.

3. OTHER MAINTENANCE ITEM

3.1 Disassembly/Adjustment prohibited items

A. Paint-locked screws

NOTE

- **To prevent loose screws, a screw lock in blue or green series color is applied to the screws.**
- **The screw lock is applied to the screws that may get loose due to the vibrations and loads created by the use of machine or due to the vibrations created during transportation.**
- **If the screw lock coated screws are loosened or removed, be sure to apply a screw lock after the screws are tightened.**

B. Red-painted screws

NOTE

- **The screws which are difficult to be adjusted in the field are painted in red in order to prevent them from being removed by mistake.**
- **Do not remove or loosen any of the red-painted screws in the field. It should also be noted that, when two or more screws are used for a single part, only one representative screw may be marked with the red paint.**

C. Variable resistors on board

NOTE

- **Do not turn the variable resistors on boards for which no adjusting instructions are given in Adjustment/Setting.**

D. Removal of PWBs

⚠ CAUTION

- **When removing a circuit board or other electrical component, refer to "Handling of PWBs" and follow the corresponding removal procedures.**
- **The removal procedures given in the following omit the removal of connectors and screws securing the circuit board support or circuit board.**
- **Where it is absolutely necessary to touch the ICs and other electrical components on the board, be sure to ground your body.**

3.2 Disassembly/reassembly parts list

Section	Part name	Ref. page
Exterior parts	Upper cover /1	P.13
	Upper cover /2	
	Upper cover /3	
	Rear cover	P.14
	Rear left cover	P.14
	Front left cover	P.14
	Right cover	P.15
	Main tray (Paper exit lower tray)	P.15
	Sub tray (Paper exit upper tray)	P.16
Units	Finisher	P.17
	Horizontal transport unit	P.18
Board and etc.	FS control board (FSCB)	P.19
	Transport control board (TRCB)	P.19
Electrical parts	Transport motor/1 (M1)	P.20
	Transport motor/2 (M2)	P.21
	Bypass transport motor (M3)	P.22
	Exit roller motor (M4)	P.23
	Main tray lift motor (M5)	P.25
	Paper output roller motor (M6)	P.26
	Stacker entrance motor (M10)	P.26
	2 staples stapler movement motor (M13)	P.27
	Trail edge paddle motor (M15)	P.28
	Paddle motor (M16)	P.28
	Stacker plate motor (M17)	P.30
	Rewind paddle motor (M18)	P.31
	Route change gate solenoid (SD1)	P.35
	Sub tray gate solenoid (SD3)	P.37
	Switch back solenoid (SD4)	P.37
	Transport motor (M201)	P.38
	Fan motor/1 (FM1)	P.39
	Fan motor/2 (FM2)	P.40
Others	Sub tray paper exit route	P.33
	Lift wire	P.41

3.3 Disassembly/reassembly procedure

3.3.1 Upper cover /1, Upper cover /2, Upper cover /3

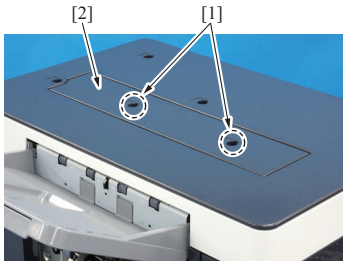

A11PF2C010DA

1. Remove two screws [1], and remove the upper cover/1 [2].

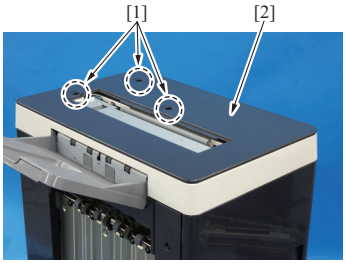

A11PF2C011DA

2. Remove three screws [1], and remove the upper cover/2 [2].

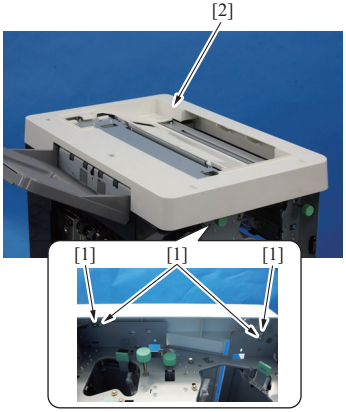

A11PF2C012DA

3. Open the front door.
4. Remove four screws [1], and remove the upper cover/3 [2].

5. Reinstall the above parts following the removal steps in reverse.

3.3.2 Rear cover

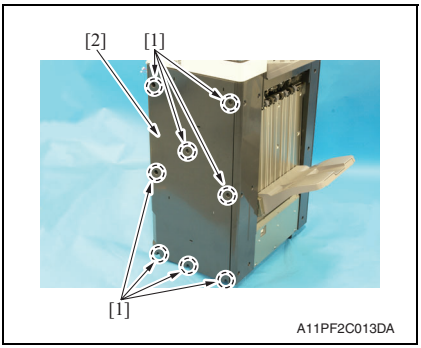

1. Remove eight screws [1], and remove the rear cover [2].

2. Reinstall the above parts following the removal steps in reverse.

3.3.3 Rear left cover

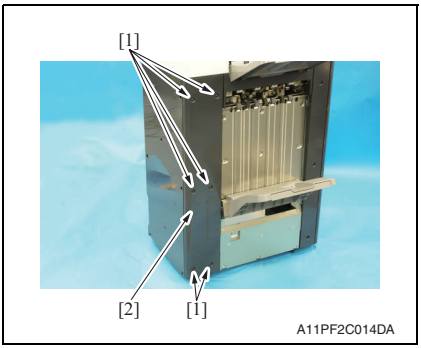

1. Remove six screws [1], and remove the rear left cover [2].

2. Reinstall the above parts following the removal steps in reverse.

3.3.4 Front left cover

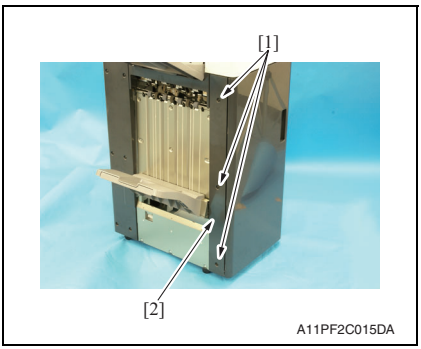

1. Remove three screws [1], and remove the front left cover [2].

2. Reinstall the above parts following the removal steps in reverse.

3.3.5 Right cover

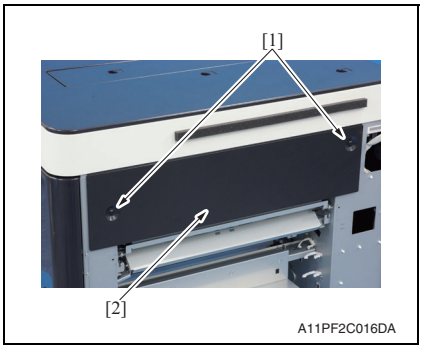

1. Remove two screws [1], and remove the right cover [2].

2. Reinstall the above parts following the removal steps in reverse.

3.3.6 Main tray (Paper exit lower tray)

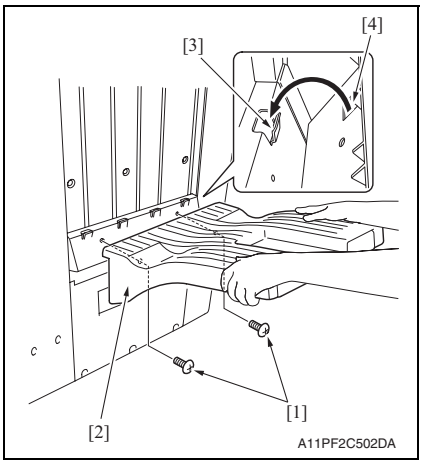

1. Remove two screws [1], and remove the main tray [2].

NOTE

- **To reinstall the main tray, align the four fittings [3] with the corresponding four guide holes [4] on the main tray and fix the tray.**

2. Reinstall the above parts following the removal steps in reverse.

3.3.7 Sub tray (Paper exit upper tray)

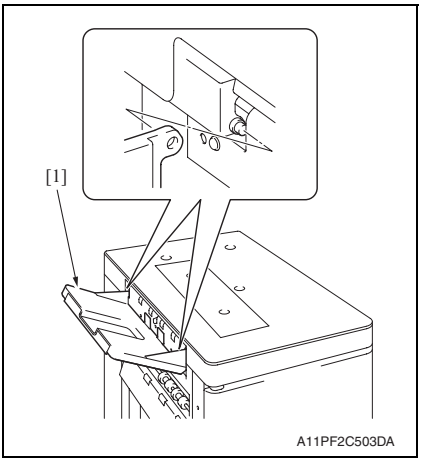

1. Remove the sub tray [1] as shown in the illustration.

2. Reinstall the above parts following the removal steps in reverse.

3.3.8 Finisher

1. Open the finisher front door.

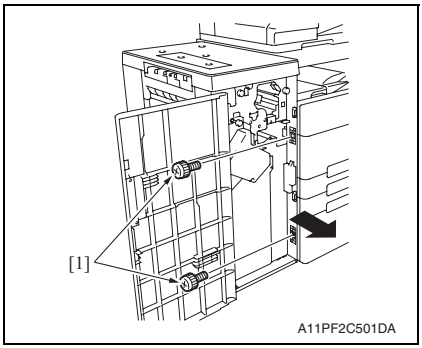

2. Remove two screws [1] and slide the finisher as shown in the illustration.

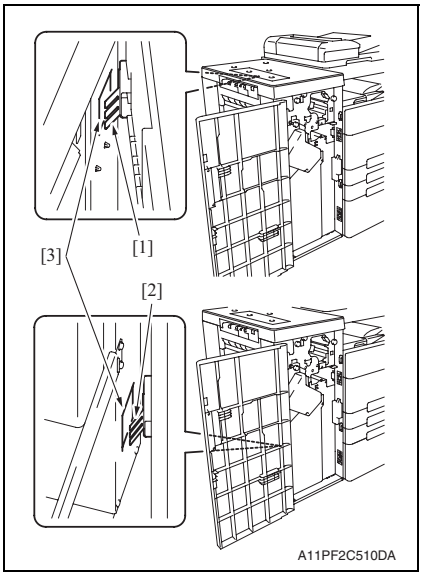

NOTE

- **To mount the finisher, align the hook portions of the mounting bracket [1] and [2] with the upper and lower holes [3] in the finisher. Then, push the finisher toward the rear.**

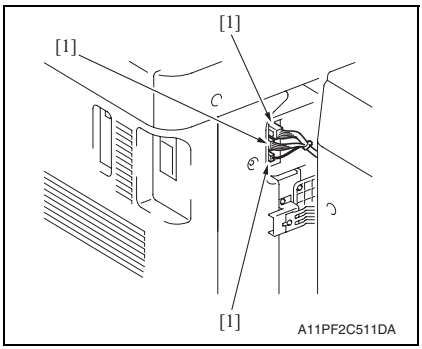

3. Disconnect three connectors [1] and remove the finisher.

4. Reinstall the above parts following the removal steps in reverse.

3.3.9 Horizontal transport unit

1. Remove the finisher.
See P.17

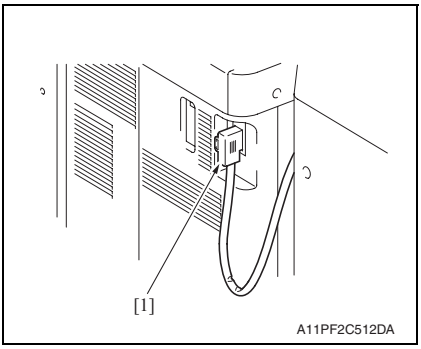

2. Remove the relay connector [1].

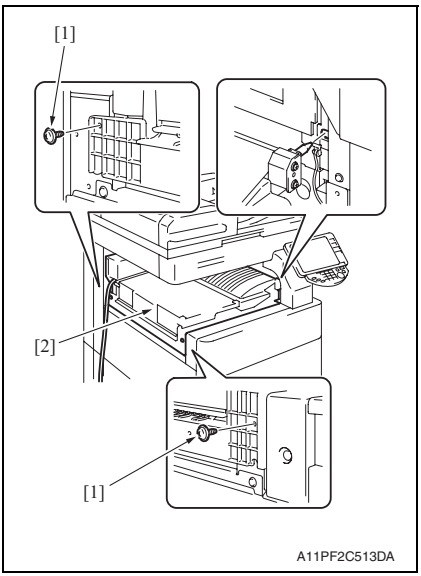

3. Remove two screws [1] and remove the horizontal transport unit [2].

4. Reinstall the above parts following the removal steps in reverse.

3.3.10 FS control board

1. Remove rear cover.
See P.14

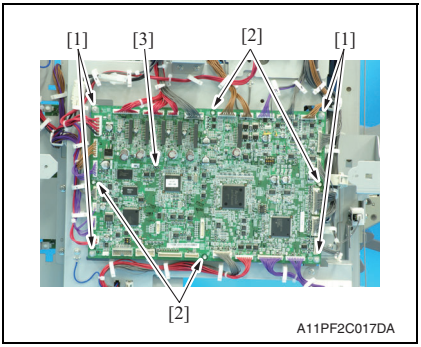

2. Remove all connectors from the FS control board.
3. Remove four screws [1] and four board supports [2], and remove the FS control board [3].
4. Reinstall the above parts following the removal steps in reverse.

3.3.11 Transport control board (TRCB)

1. Remove the horizontal transport unit.
See P.18

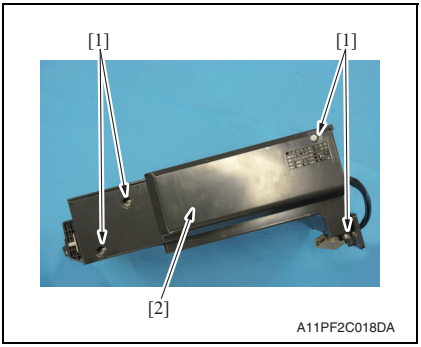

2. Remove four screws [1], and remove the horizontal transport unit rear cover [2].

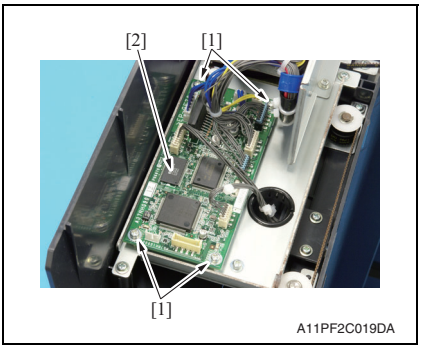

3. Remove all connectors from the transfer control board.
4. Remove four screws [1], and remove the transfer control board [2].

3.3.12 Transport motor/1 (M1)

1. Remove the rear cover.
See P.14
2. Remove the upper cover/1, upper cover/2 and upper cover/3.
See P.13

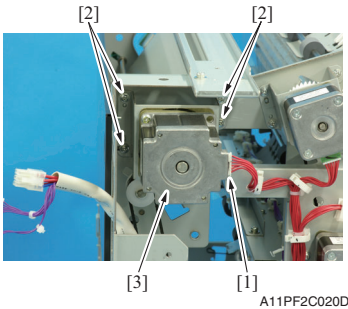

A11PF2C020DA

3. Disconnect the connector [1] and remove four screws [2], and remove the transport motor/1 assy [3].

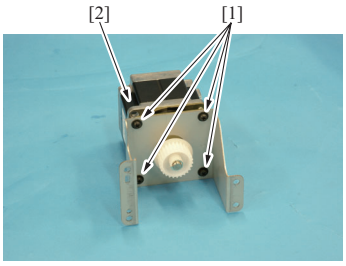

A11PF2C021DA

4. Remove four screws [1], and remove the transport motor/1 [2].

5. Reinstall the above parts following the removal steps in reverse.

3.3.13 Transport motor/2 (M2)

1. Remove the rear cover.
See P.14
2. Remove the upper cover/1, upper cover/2 and upper cover/3.
See P.13

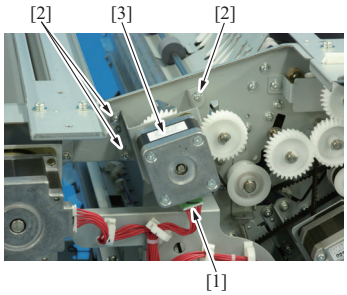

A11PF2C022DA

3. Disconnect the connector [1] and remove three screws [2], and remove the transport motor/2 assy [3].

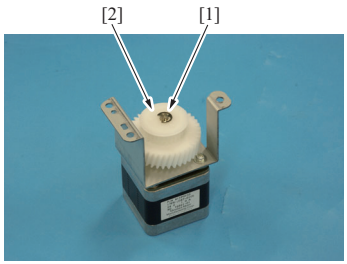

A11PF2C023DA

4. Remove the E-ring [1] and remove the gear [2].

NOTE

- **Be careful not to lose the pin.**

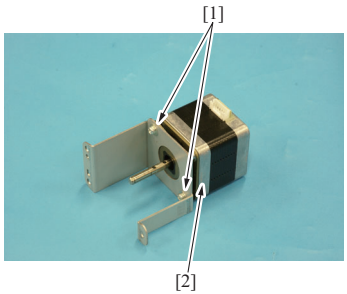

A11PF2C024DA

5. Remove two screws [1], and remove the transport motor/2 [2].

6. Reinstall the above parts following the removal steps in reverse.

3.3.14 Bypass transport motor (M3)

1. Remove the rear cover.
See P.14

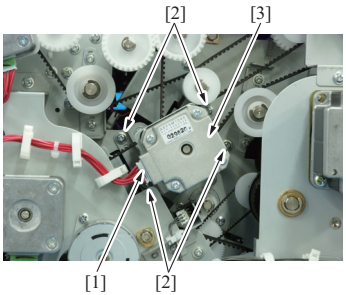

A11PF2C025DA

2. Disconnect the connector [1] and remove four screws [2], and remove the bypass transport motor assy [3].

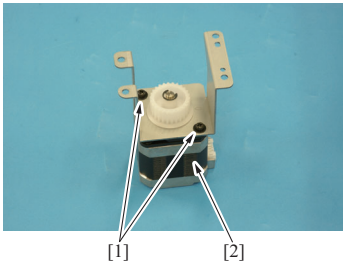

A11PF2C026DA

3. Remove two screws [1], and remove the bypass transport motor [2].

4. Reinstall the above parts following the removal steps in reverse.

3.3.15 Exit roller motor (M4)

1. Remove the rear cover.
See P.14
2. Remove the stacker plate motor.
See P.30

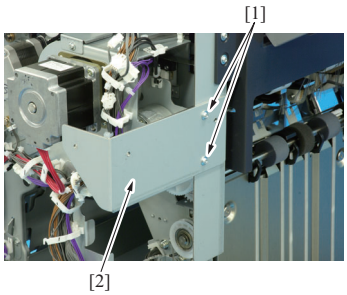

3. Remove two screws [1], and remove the plate [2].

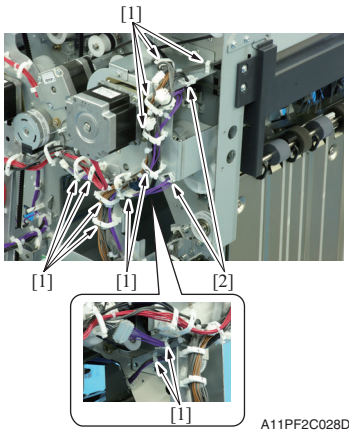

4. Remove the harness from twelve wire saddles [1] and two edge covers [2].

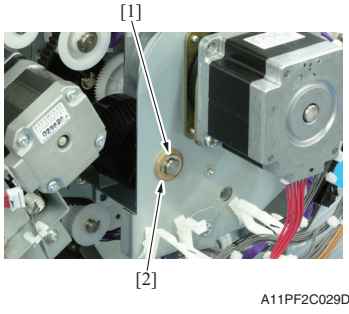

5. Remove the E-ring [1] and the bearing [2].

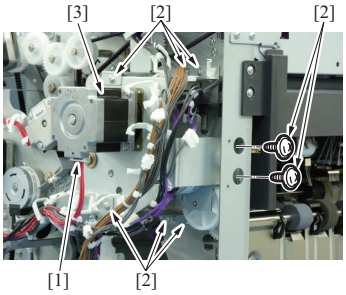

A11PF2C030DA

6. Disconnect the connector [1] of the paper output roller motor (M6).
7. Remove eight screws [2], and remove the drive assy [3].

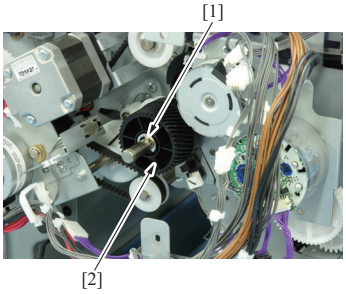

A11PF2C031DA

8. Remove the E-ring [1], and remove the gear [2].

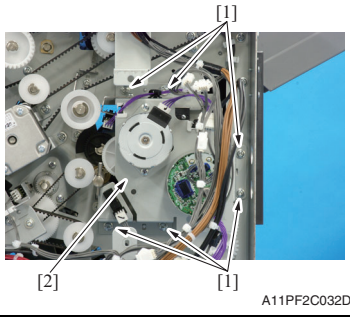

A11PF2C032DA

9. Remove six screws [1], and remove the drive assy [2].

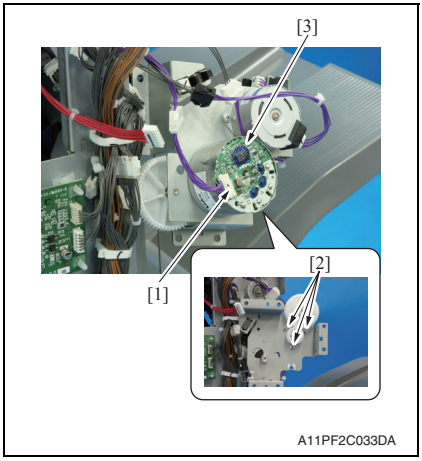

10. Disconnect the connector [1].
11. Remove three screws [2], and remove the exit roller motor [3].

12. Reinstall the above parts following the removal steps in reverse.

3.3.16 Main tray lift motor (M5)

1. Remove the rear cover.
See P.14

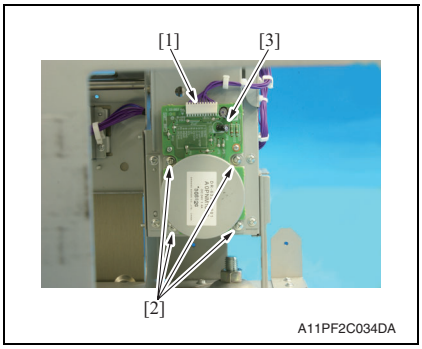

2. Disconnect the connector [1].
3. Remove four screws [2], and remove the main tray lift motor [3].

4. Reinstall the above parts following the removal steps in reverse.

3.3.17 Paper output roller motor (M6)

1. Remove the rear cover.
See P.14

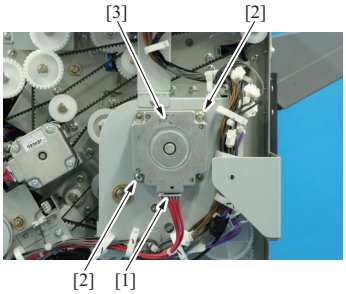

2. Disconnect the connector [1].
3. Remove two screws [2], remove the paper output roller motor [3].
4. Reinstall the above parts following the removal steps in reverse.

3.3.18 Stacker entrance motor (M10)

1. Remove the rear cover.
See P.14

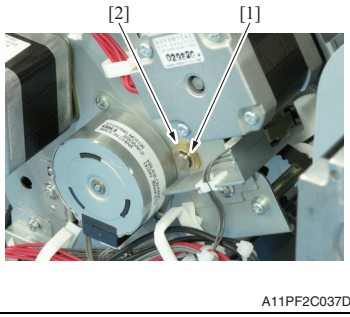

2. Remove the E-ring [1] and the bearing [2].

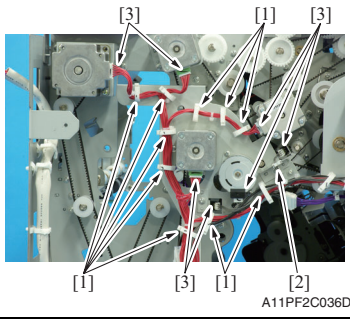

3. Remove the harness from ten wire saddles [1] and the edge covers [2].
4. Disconnect seven connectors [3].

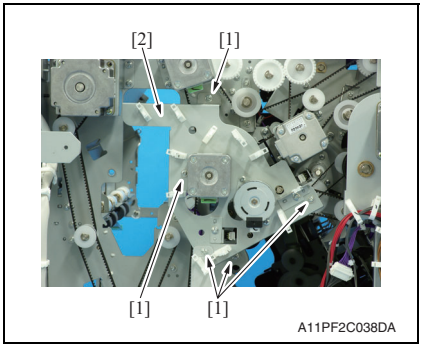

5. Remove five screws [1], and remove the drive assy [2].

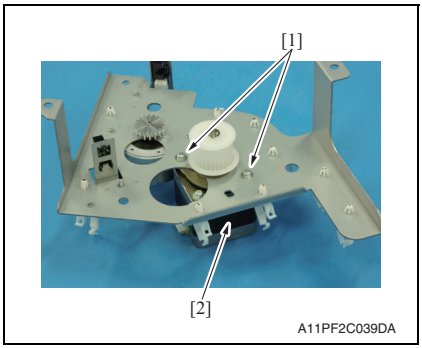

6. Remove two screws [1], and remove the stacker entrance motor [2].

3.3.19 2 staples stapler movement motor (M13)

1. Remove the stapler unit.
See P.7

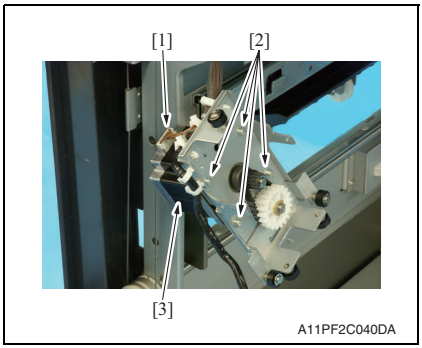

2. Disconnect the connector [1].
3. Remove four screws [2], and remove the 2 staples stapler movement motor [3].

4. Reinstall the above parts following the removal steps in reverse.

3.3.20 Trail edge paddle motor (M15)

1. Remove the rear cover.
See P.14

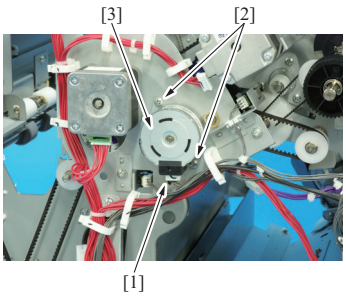

2. Disconnect the connector [1].
3. Remove two screws [2], and remove the trail edge paddle motor [3].
4. Reinstall the above parts following the removal steps in reverse.

3.3.21 Paddle motor (M16)

1. Remove the rear cover.
See P.14
2. Remove the sub tray paper route.
See P.33

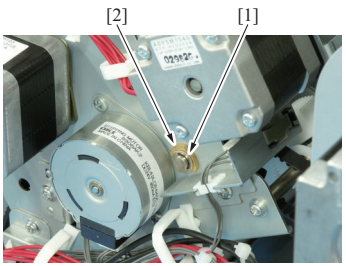

3. Remove the E-ring [1] and the bearing [2].

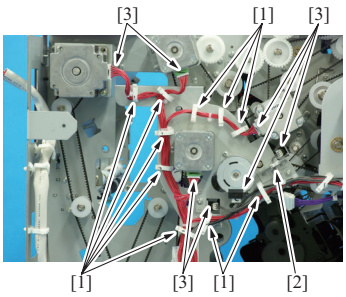

4. Remove the harness from ten wire saddles [1] and the edge covers [2].
5. Disconnect seven connectors [3].

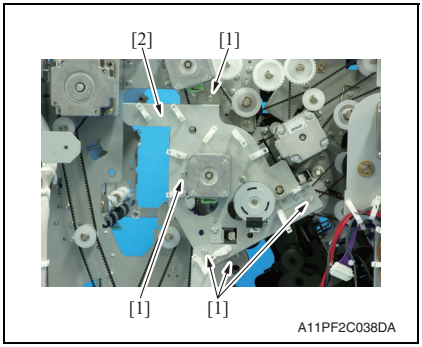

6. Remove five screws [1], and remove the drive assy [2].

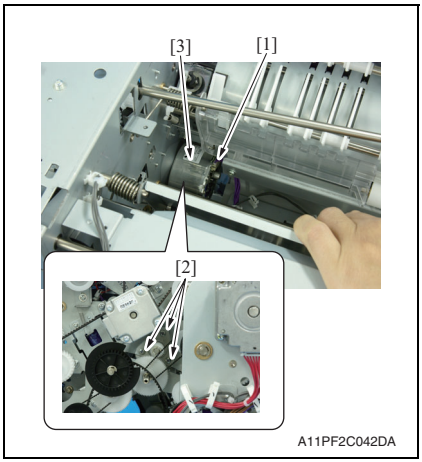

7. While pressing the plate down, disconnect the connector [1].
8. Remove three screws [2], and remove the paddle motor [3].

9. Reinstall the above parts following the removal steps in reverse.

3.3.22 Stacker plate motor (M17)

1. Remove the rear cover.
See P.14

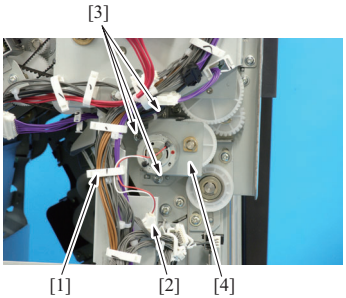

2. Remove the harness from the wire saddle [1].
3. Disconnect the connector [2].
4. Remove three screws [3], and remove the stacker plate motor assy [4].

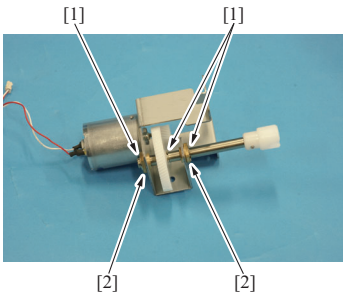

5. Remove three E-rings [1] and two bearings [2].

NOTE

- **Be careful not to lose the pin.**

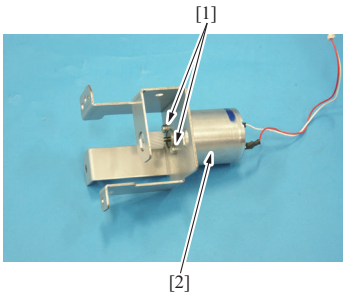

6. Remove two screws [1], and remove the stacker plate motor [2].

7. Reinstall the above parts following the removal steps in reverse.

3.3.23 Rewind paddle motor (M18)

1. Remove the rear cover.
See P.14
2. Remove the stacker plate motor.
See P.30

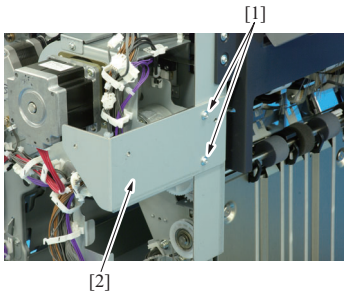

3. Remove two screws [1], and remove the plate [2].

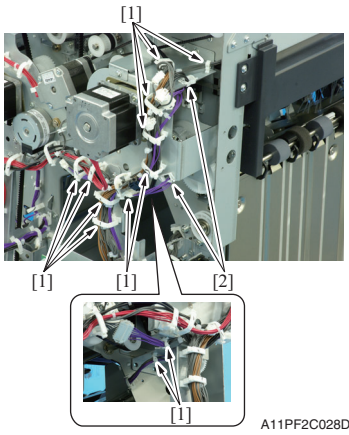

4. Remove the harness from twelve wire saddles [1] and two edge covers [2].

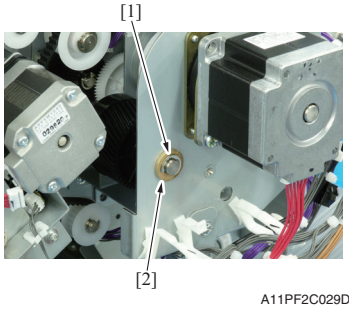

5. Remove the E-ring [1] and the bearing [2].

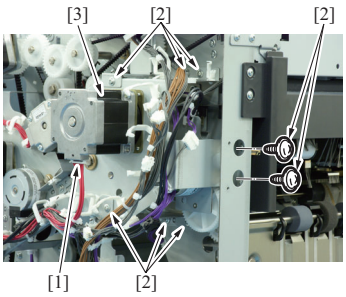

A11PF2C030DA

6. Disconnect the connector [1] of the paper output roller motor (M6).
7. Remove eight screws [2], and remove the drive assy [3].

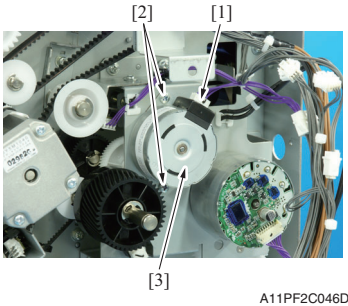

A11PF2C046DA

8. Disconnect the connector [1].
9. Remove two screws [2], and remove the rewind paddle motor [3].

10. Reinstall the above parts following the removal steps in reverse.

3.3.24 Sub tray paper exit route

1. Remove the sub tray.
See P.16
2. Remove the rear cover.
See P.14
3. Remove the front left cover.
See P.14
4. Remove the upper cover/1, upper cover/2 and upper cover/3.
See P.13

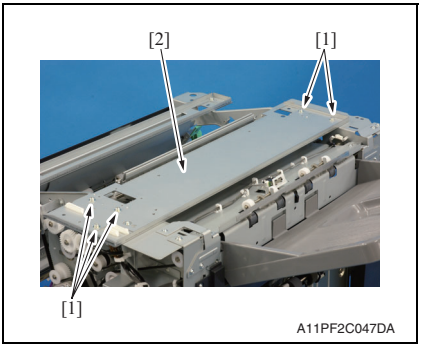

5. Remove five screws [1], and remove the plate [2].

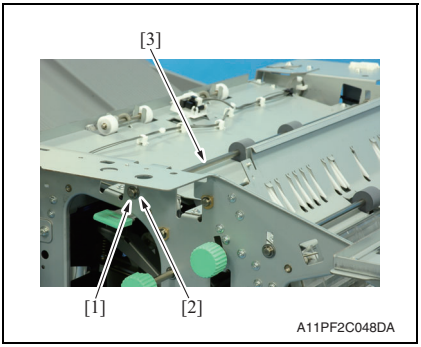

6. Remove the E-ring [1] and bearing [2] to release the transport roller [3].

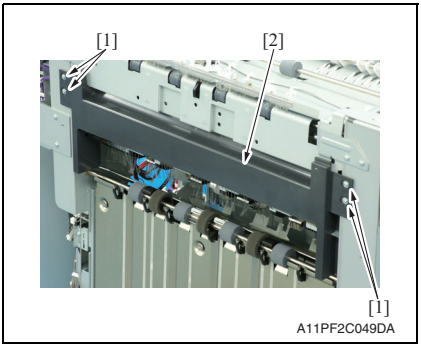

7. Remove four screws [1], and remove the upper left cover [2].

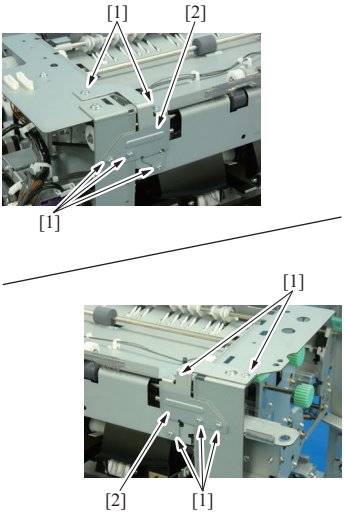

A11PF2C050DA

8. Remove ten screws [1], and remove two sub tray mount plates [2].

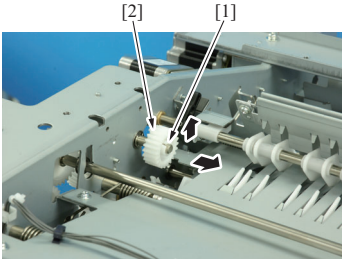

A11PF2C051DA

9. Remove the tab [1], and remove the gear [2].

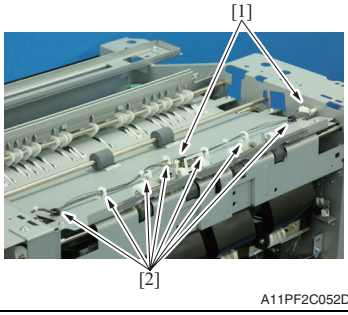

A11PF2C052DA

10. Disconnect two connectors [1].
11. Remove the harness from seven wire saddles [2].

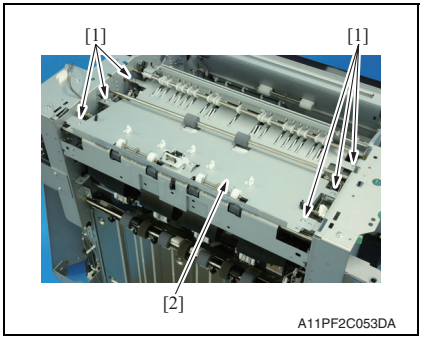

12. Remove six screws [1], and remove the sub tray paper exit route [2].

3.3.25 Route change gate solenoid (SD1)

1. Remove the rear cover.
See P.14

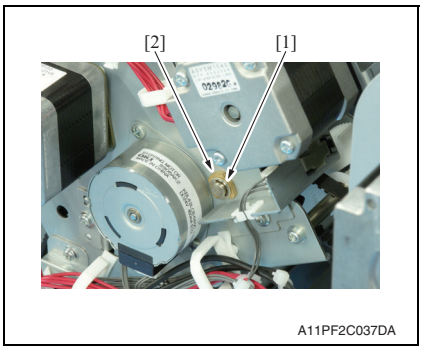

2. Remove the E-ring [1] and the bearing [2].

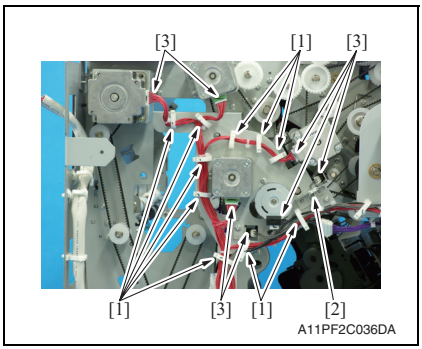

3. Remove the harness from ten wire saddles [1] and the edge covers [2].
4. Disconnect seven connectors [3].

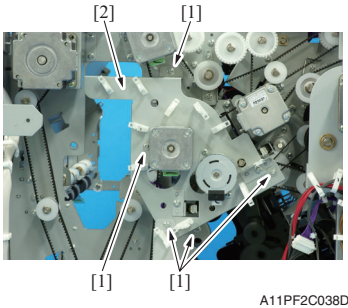

A11PF2C038DA

5. Remove five screws [1], and remove the drive assy [2].

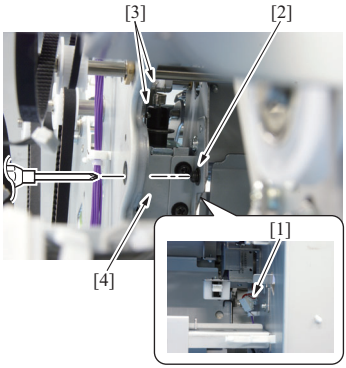

A11PF2C054DA

6. Disconnect the connector [1].
7. Remove the screw [2] and two springs [3], and remove the route change gate solenoid [4].

8. Reinstall the above parts following the removal steps in reverse.

3.3.26 Sub tray gate solenoid (SD3)

1. Remove the rear cover.
See P.14
2. Remove the sub tray paper route.
See P.33

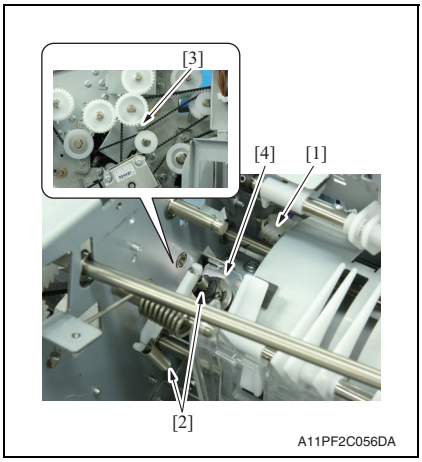

3. Disconnect the connector [1].
4. Remove two springs [2] and the screw [3], and remove the sub tray gate solenoid [4].
5. Reinstall the above parts following the removal steps in reverse.

3.3.27 Switch back solenoid (SD4)

1. Open the front door.

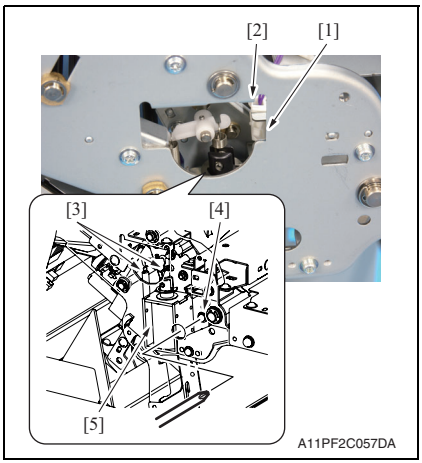

2. Disconnect the connector [1].
3. Remove the harness from the edge cover [2].
4. Remove two springs [3] and the screw [4], and remove the switch back solenoid [5].
5. Reinstall the above parts following the removal steps in reverse.

3.3.28 Transport motor (M201)

1. Remove the horizontal transport unit.
See P.18

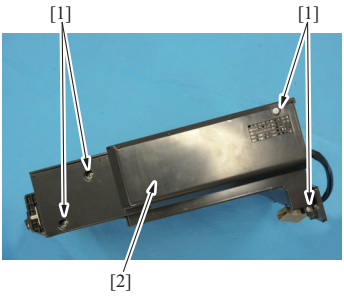

2. Remove four screws [1], and remove the horizontal transport unit rear cover [2].

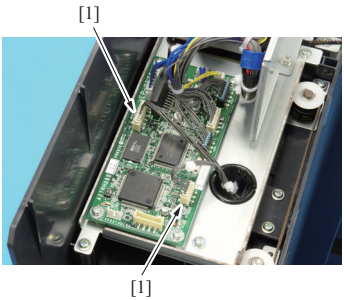

3. Disconnect two connectors [1] from the transport control board.

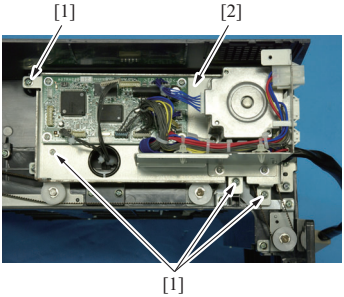

4. Remove four screws [1], and remove the transport motor assy [2].

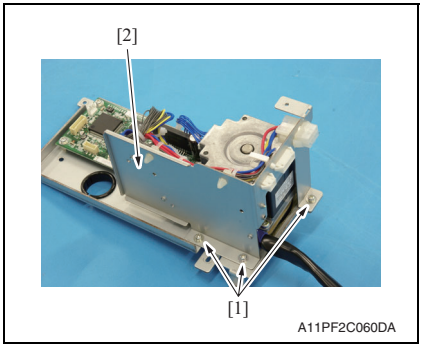

5. Remove three screws [1], and remove the plate [2].

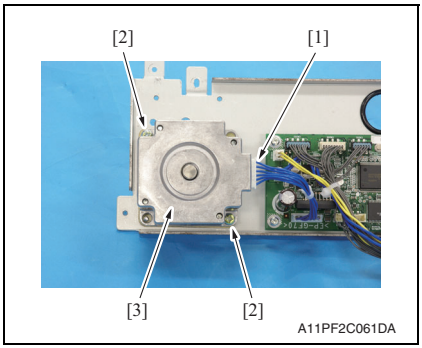

6. Disconnect the connector [1].
7. Remove two screws [2], and remove the transport motor [3].

8. Reinstall the above parts following the removal steps in reverse.

3.3.29 Fan motor/1 (FM1)

1. Remove the horizontal transport unit.
See P.18

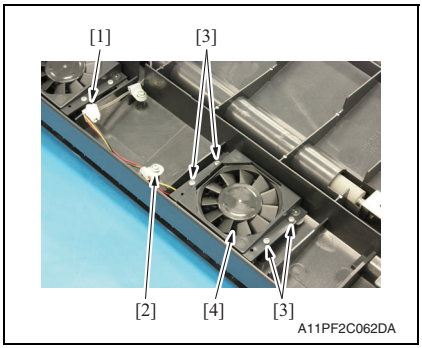

2. Disconnect the connector [1].
3. Remove the screw [2].
4. Remove four screw [3], and remove the fan motor/1 [4].

5. Reinstall the above parts following the removal steps in reverse.

3.3.30 Fan motor/2 (FM2)

1. Remove the horizontal transport unit.
See P.18

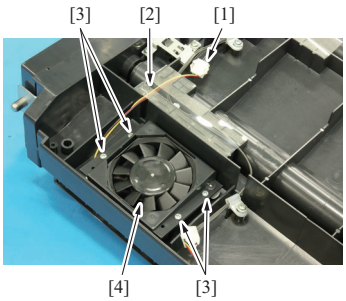

2. Disconnect the connector [1].
3. Remove the tape [2].
4. Remove four screw [3], and remove the fan motor/2 [4].

5. Reinstall the above parts following the removal steps in reverse.

3.3.31 Lift wire

⚠ CAUTION

- **When the tray 1 lift motor is removed, the finishing tray 1 may fall down. When removing the tray 1 lift motor, be sure to support the finishing tray 1 with your hand.**

NOTE

- **The following procedure for replacing the lift wire shows the examples on the rear side. The front and rear lift wires are marked as "F" and "R" on their mounting plates respectively. Be sure to check it when reinstalling the lift wires.**

A. Disassembly procedure

1. Remove the rear left cover.
See P.14
2. Remove the front door.
3. Remove the rear cover.
See P.14
4. Remove the main tray (Paper exit lower tray).
See P.15

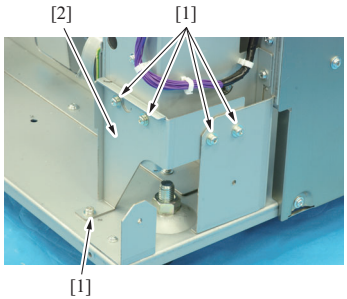

5. Remove five screws [1] and remove the reinforcing metal [2].

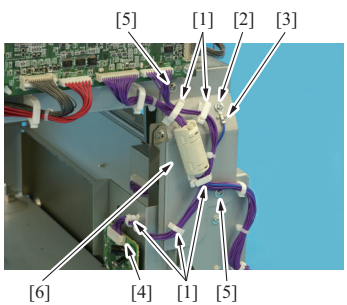

6. Remove the harness from five wire saddles [1].
7. Remove two screws [2], and remove the earth [3].
8. Disconnect the connector [4].
9. Remove two screws [5], remove the plate [6].

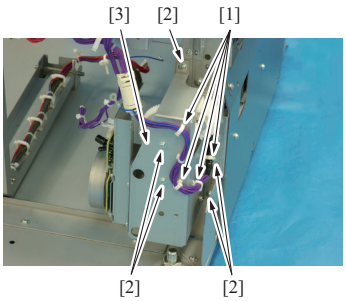

A11PF2C066DA

10. Remove the harness from four wire saddles [1].

11. Remove five screws [2], remove the main tray lift motor unit [3].

NOTE

- **When the tray 1 lift motor unit [3] is removed, the finishing tray 1 may fall down. When removing the main tray lift motor unit, be sure to support the finishing tray 1 with your hand.**

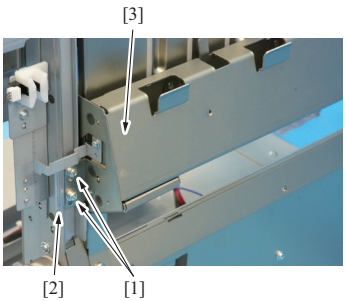

A11PF2C067DA

12. Remove two screws [1], and remove the wire mounting plate [2] of the rear lift wire from the lift stay [3].

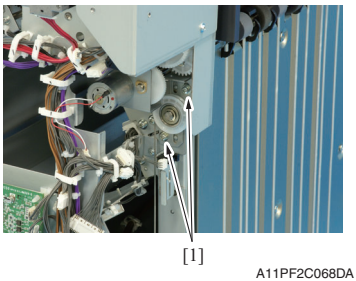

A11PF2C068DA

13. Loosen two screws [1] on the belt tensioner.

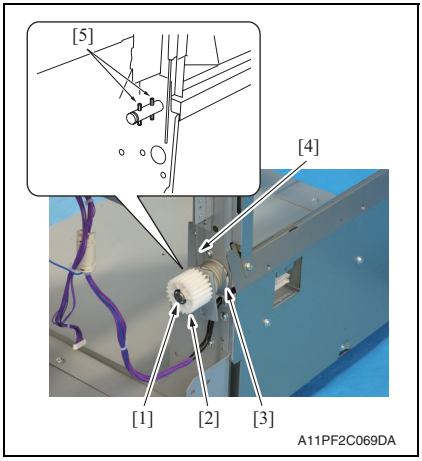

14. Remove the E-ring [1], the gear [2], and the lift pulley /Lw [3], and remove the lift wire [4].

NOTE

- **When removing the lift pulley /Lw, be sure not to let two pins [5] fall down.**

B. Installation procedure

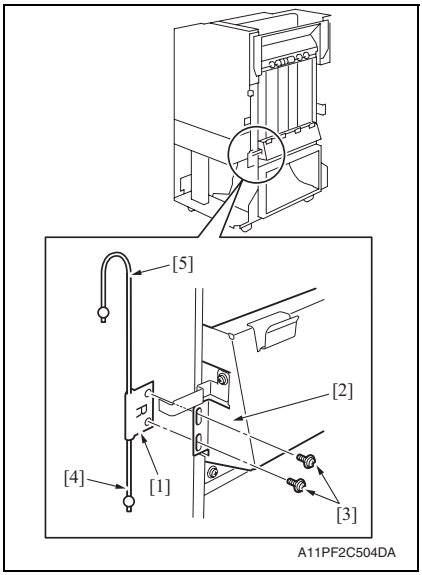

1. Tighten the wire mounting plate [1] of the new lift wire on the lift stay [2] with two screws [3] temporarily.

NOTE

- **The lift wire should be placed with the short side [4] to the bottom and the long side [5] to the top.**

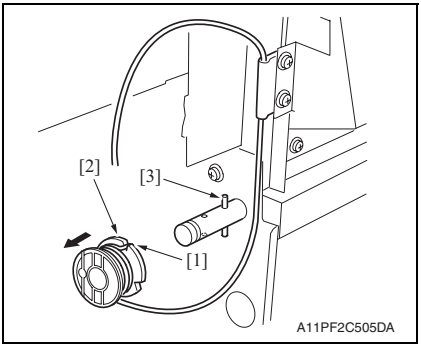

2. Fasten the wire end of the lift wire with the inner wire end hole of the lift pulley /Lw [1]. Then, draw the lift wire through the notch [2] and wind it 5 turns from inside to outside around the lift pulley with no slack, and then insert the lift pulley /Lw [1] into the shaft so that it coincides with the pin [3].

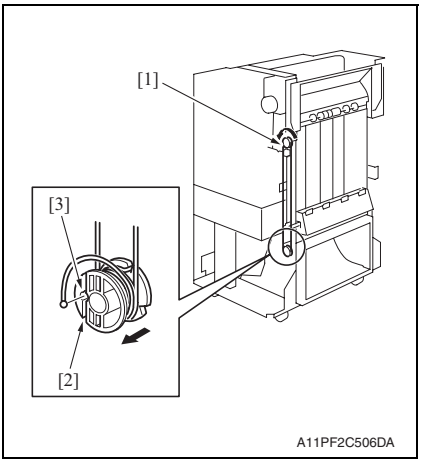

3. Hook the lift wire on the lift pulley /Up [1]. Then, wind the lift wire 2 turns from inside to outside around the lift pulley /Lw [2] with no slack, draw the lift wire through the notch and fasten it with the wire end hole [3].

NOTE

- **Be sure to wind the lift wire on the lift pulley /UP without the short side (the side wound in advance) and the long side (the side wound subsequently) are overlapped.**

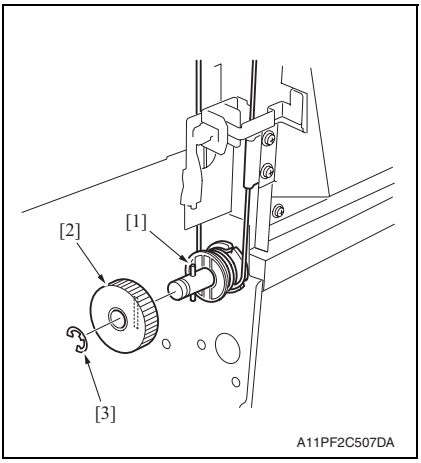

4. Insert the pin [1] and the gear [2], and then fasten it with E-ring [3].

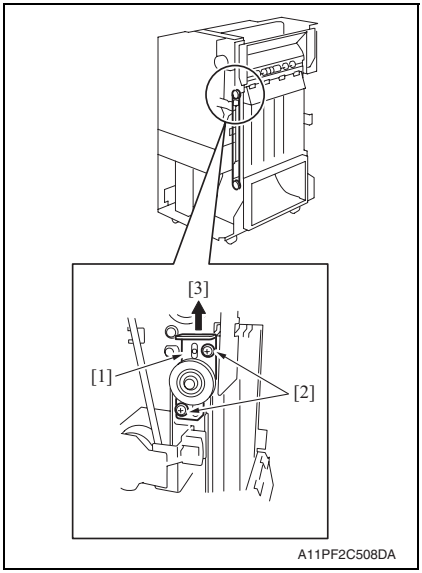

5. Use a tension gauge or spring balance to pull up the belt tensioner [1] with a standard force “A” [3] and fasten it with the two screws [2].
Standard value [3]: A = 2.5 ± 0.25 kg

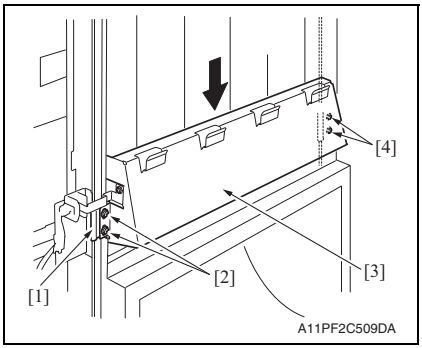

6. Loosen the two screws [2] on the wire mounting plate [1] at the front to push down the lift stay [3] to the horizontal position, and then remove four screws [2] and [4] from both the front and the rear.

NOTE

- **Be sure to check the lift stay [3] is in the horizontal position.**

Blank Page

KONICA MINOLTA

SERVICE MANUAL

FIELD SERVICE

SD-508

2009.07

KONICA MINOLTA BUSINESS TECHNOLOGIES, INC. Ver. 2.0

Revision history

After publication of this service manual, the parts and mechanism may be subject to change for improvement of their performance.
Therefore, the descriptions given in this service manual may not coincide with the actual machine.

When any change has been made to the descriptions in the service manual, a revised version will be issued with a revision mark added as required.

Revision mark:

- To indicate clearly a section revised, △1 is shown at the left margin of the revised section.
  The number inside △1 represents the number of times the revision has been made.

- To indicate clearly a page that contains the revision, ▲1 is shown near the page number of the corresponding page.
  The number inside ▲1 represents the number of times the revision has been made.

NOTE

Revision marks shown in a page are restricted only to the latest ones with the old ones deleted.

- When a page revised in Ver. 2.0 has been changed in Ver. 3.0:
  The revision marks for Ver. 3.0 only are shown with those for Ver. 2.0 deleted.
- When a page revised in Ver. 2.0 has not been changed in Ver. 3.0:
  The revision marks for Ver. 2.0 are left as they are.

Date	Service manual Ver.	Revision mark	Descriptions of revision
2009/07	2.0	△1	Error correction
2009/01	1.0	—	Issue of the first edition

CONTENTS

SD-508

OUTLINE

1. PRODUCT SPECIFICATIONS 1

MAINTENANCE

2. PERIODICAL MAINTENANCE PROCEDURE 3
2.1 Stapler section 3
2.1.1 Replacing the stapler unit 3
3. OTHER MAINTENANCE ITEM 6
3.1 Items not allowed to be disassembled and adjusted 6
3.2 Disassembly/reassembly parts list 7
3.3 Disassembly/reassembly procedure 7
3.3.1 Front cover 7
3.3.2 Right cover 8
3.3.3 Staple unit cover 8
3.3.4 Saddle unit 8
3.3.5 Paper exit tray 11
3.3.6 SD drive board (SDDB) 12
3.3.7 Center staple alignment motor /F (M20) 12
3.3.8 Center staple alignment motor /R (M21) 13
3.3.9 Leading edge stopper motor (M22) 14
3.3.10 Center staple motor (M23) 14
3.3.11 Center staple paddle lift motor/C (M26) 15
3.3.12 Center staple paddle/T (M29) 15
3.3.13 Transport motor (M33) 17
3.3.14 Tri-folding change solenoid (SD5) 17
3.3.15 Exit grip solenoid (SD6) 18
4. SERVICE TOOL 18
4.1 CE tool list 18

ADJUSTMENT/SETTING

5. HOW TO USE THE ADJUSTMENT SECTION 19
6. MECHANICAL ADJUSTMENT 20
6.1 Mechanical adjustment of the paper exit section 20
6.1.1 Second fold position adjustment 20

6.1.2 Adjustment for Staple Clinch Failure..... 22

OUTLINE

1. PRODUCT SPECIFICATIONS

A. Type

Name	Saddle sticher SD-508
Type	Built into the finisher
Installation	Screwed to the finisher
Document alignment	Center
Stapling function	Center parallel two points

B. Paper

(1) Saddle stitching

Type	Plain paper, Thick paper 1, Thick paper 2
Size	A3, B4, A4S, 12 x 18, 11 x 17, 8-1/2 x 14, 8-1/2 x 11S, 8KS Min: 210 mm x 279 mm , 8-1/4 x 11 Max: 314 mm x 458 mm, 12-1/4 x 18
Max. saddle stitching capacity	20 sheets (64 g/m^2 to 80 g/m^2 ,17 to 21.25 lb)
	16 sheets (81 g/m^2 to 90 g/m^2 ,21.5 to 24 lb)
	19 sheets 80 g/m^2 ,21.25 lb) + 1 sheet (209 g/m^2 , 55.5 lb)

(2) Folding

Type	Plain paper
Size	A3, B4, A4S, 12 x 18, 11 x 17, 8-1/2 x 14, 8-1/2 x 11S, 8KS Min: 210 mm x 279 mm , 8-1/4 x 11 Max: 314 mm x 458 mm, 12-1/4 x 18
⚠1 Max. number of sheets folded together	3 sheets (64 g/m^2 to 90 g/m^2 ,17 to 24 lb)

(3) Tri-folding

Type	Plain paper
Size	A4S, 8-1/2 x 11S, 16KS
⚠1 Max. number of sheets folded together	3 sheets (64 g/m^2 to 90 g/m^2 ,17 to 24 lb) *

⚠1 *: It is not guaranteed when folding together more than 2 sheets.

C. Machine specifications

Power requirements	DC 24 V (supplied from the finisher) DC 5 V
Max. power consumption	40 W or less
Dimensions	281.3 mm (W) x 596.4 mm (D) x 529.8 mm (H) 11.07 inch (W) x 23.48 inch (D) x 20.86 inch (H)
Weight	Approx. 22.6 kg + 3.8 kg (Exit tray) Approx. 49.75 lb + 8.5 lb (Exit tray)

D. Operating environment

- Conforms to the operating environment of the main body.

E. Consumables

- Staples 5000 (MS-5C)

NOTE

- **These specifications are subject to change without notice.**

MAINTENANCE

2. PERIODICAL MAINTENANCE PROCEDURE

2.1 Stapler section

2.1.1 Replacing the stapler unit

A. Periodically replaced parts/cycle

⚠1 • Stapler unit: Every 200,000 counts

B. Procedure

1. Remove the saddle unit.
See P.8
2. Remove the stapler unit cover.
See P.8
3. Remove the right cover.
See P.8

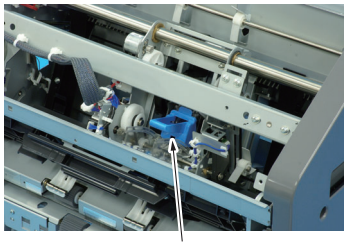

4. Remove the stapler [1].

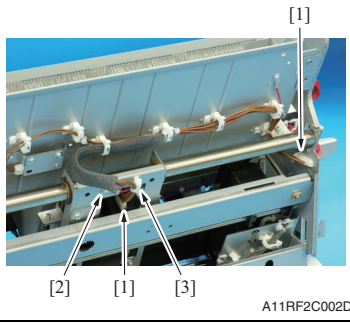

5. Disconnect two connectors [1].
6. Remove the screw [2], and remove the ground earth.
7. Remove the wire saddle [3].

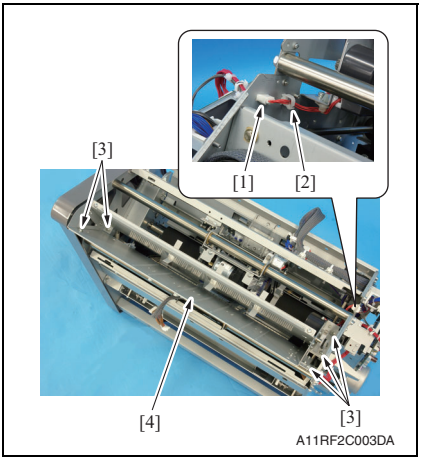

8. Disconnect the connector [1].
9. Remove the harness from the wire saddle [2].
10. Remove five screws [3], and remove the guide plate assy [4].

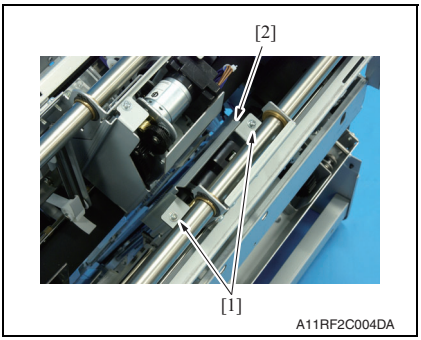

11. Remove two screws [1], and remove the plate [2].

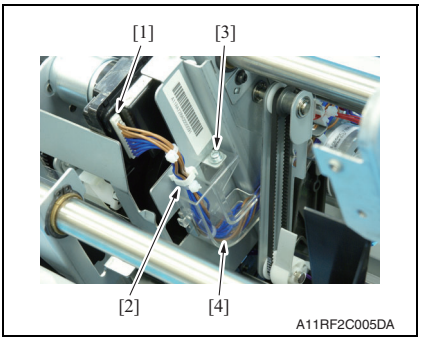

12. Disconnect the connector [1].
13. Remove the harness from the wire saddle [2].
14. Remove the screw [3], and remove the harness cover [4].

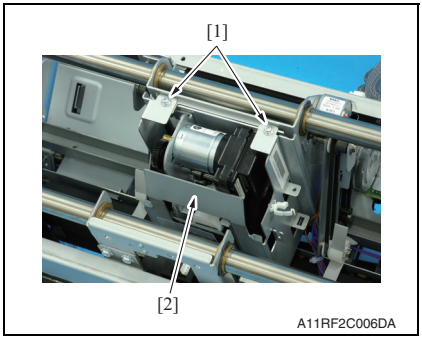

15. Remove two screws [1], and remove the stapler unit protection plate [2].

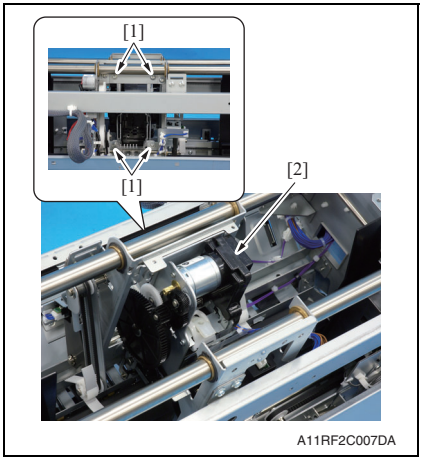

16. Remove four screws [1], and remove the staple unit [2].

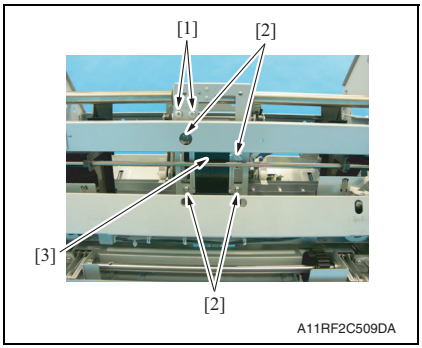

17. Remove two screws [1].
18. Remove four screws [2] and remove the clincher side from the stapler unit [3].

19. Reinstall the above parts following the removal steps in reverse.

3. OTHER MAINTENANCE ITEM

3.1 Items not allowed to be disassembled and adjusted

A. Paint-locked screws

NOTE

- **To prevent loose screws, a screw lock in blue or green series color is applied to the screws.**
- **The screw lock is applied to the screws that may get loose due to the vibrations and loads created by the use of machine or due to the vibrations created during transportation.**
- **If the screw lock coated screws are loosened or removed, be sure to apply a screw lock after the screws are tightened.**

B. Red-painted screws

NOTE

- **The screws which are difficult to be adjusted in the field are painted in red in order to prevent them from being removed by mistake.**
- **Do not remove or loosen any of the red-painted screws in the field. It should also be noted that, when two or more screws are used for a single part, only one representative screw may be marked with the red paint.**

C. Variable resistors on board

NOTE

- **Do not turn the variable resistors on boards for which no adjusting instructions are given in Adjustment/Setting.**

D. Removal of PWBs

⚠ CAUTION

- **When removing a circuit board or other electrical component, refer to "Handling of PWBs" and follow the corresponding removal procedures.**
- **The removal procedures given in the following omit the removal of connectors and screws securing the circuit board support or circuit board.**
- **Where it is absolutely necessary to touch the ICs and other electrical components on the board, be sure to ground your body.**

3.2 Disassembly/reassembly parts list

Section	Part name	Ref. page
Exterior parts	Front cover	P.7
	Right cover	P.8
	Staple unit cover	P.8
Units	Saddle unit	P.8
	Paper exit tray	P.11
Others	SD drive board (SDDB)	P.12
	Center staple alignment motor /F (M20)	P.12
	Center staple alignment motor /R (M21)	P.13
	Leading edge stopper motor (M22)	P.14
	Center staple motor (M23)	P.14
	Center staple paddle lift motor/C (M26)	P.15
	Center staple paddle/T (M29)	P.15
	Transport motor (M33)	P.17
	Tri-folding change solenoid (SD5)	P.17
	Exit grip solenoid (SD6)	P.18

3.3 Disassembly/reassembly procedure

3.3.1 Front cover

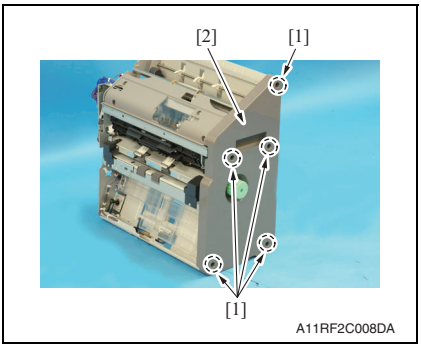

1. Remove five screws [1], and remove the front cover [2].

2. Reinstall the above parts following the removal steps in reverse.

3.3.2 Right cover

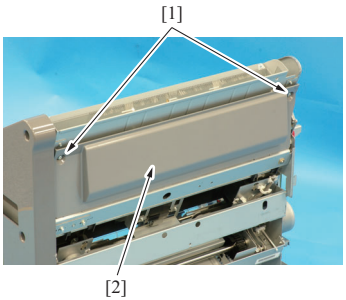

1. Remove two screws [1], and remove the right cover [2].

2. Reinstall the above parts following the removal steps in reverse.

3.3.3 Staple unit cover

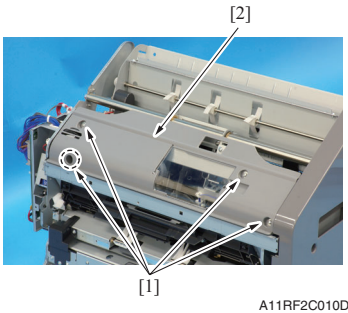

1. Remove four screws [1], and remove the staple unit cover [2].

2. Reinstall the above parts following the removal steps in reverse.

3.3.4 Saddle unit

1. Remove the finisher.
See P.17 of the FS-526 service manual.

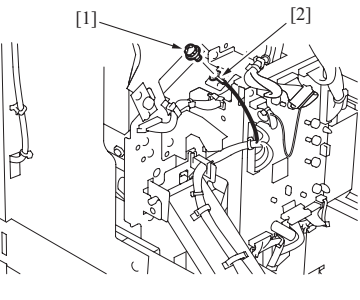

2. Remove the screw [1], and remove the ground wire [2] of the pantograph.

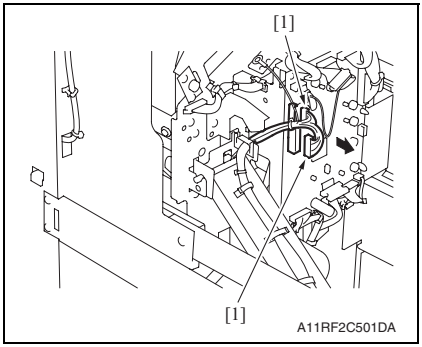

3. Disconnect two connectors [1] of the pantograph.

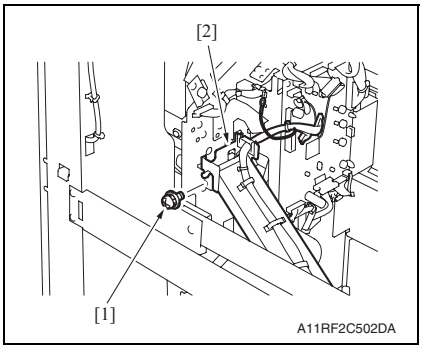

4. Remove the screw [1], and remove the pantograph [2].

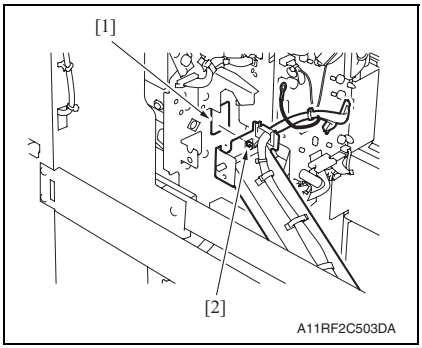

NOTE

- **When installing the pantograph, insert its hook [2] into the hole [1] on the back of the saddle unit.**

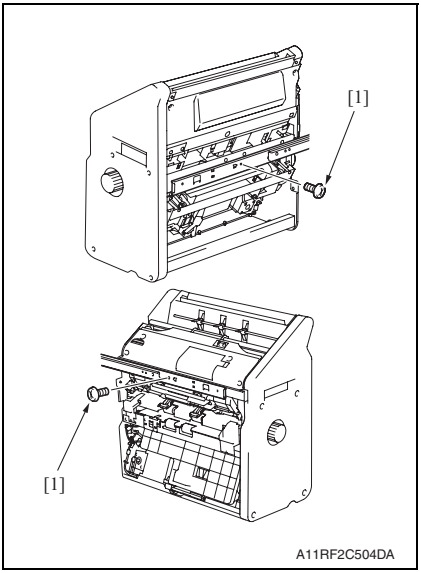

5. Remove two screws [1] of the rails.

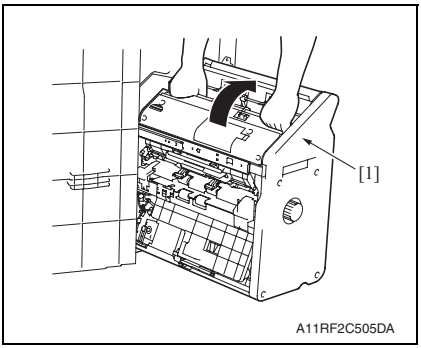

6. Grasp the parts shown in the illustration and raise the saddle unit [1] to remove it.

7. Reinstall the above parts following the removal steps in reverse.

3.3.5 Paper exit tray

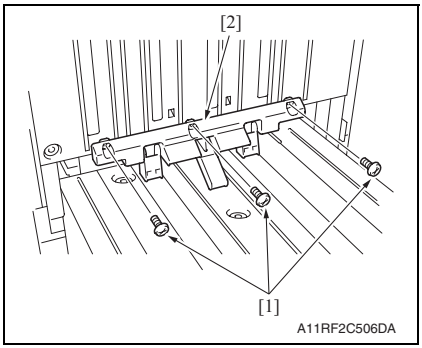

1. Remove three screws [1], and driven parts [2].

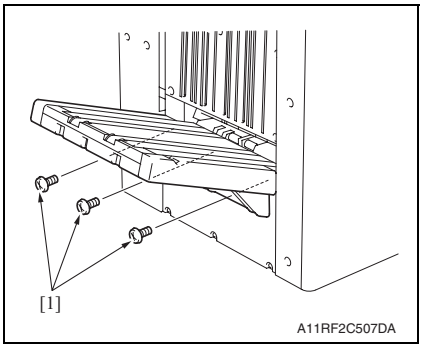

2. Remove three screws [1].

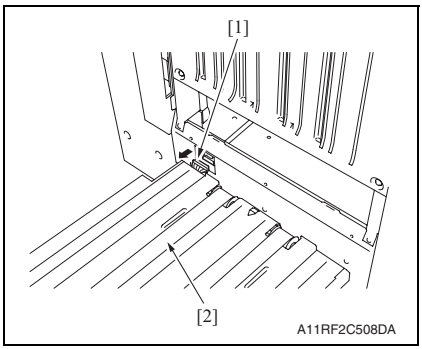

3. Disconnect the connector [1], and remove the paper exit tray [2].

4. Reinstall the above parts following the removal steps in reverse.

3.3.6 SD drive board (SDDB)

1. Remove the saddle unit.
See P.8

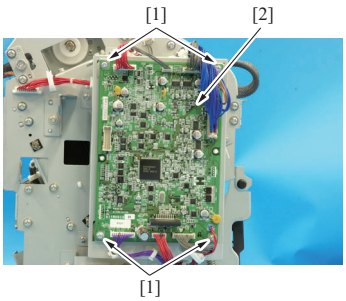

2. Disconnect all eight connectors on the SD drive board.
3. Remove four screws [1], and remove the SD drive board [2].
4. Reinstall the above parts following the removal steps in reverse.

3.3.7 Center staple alignment motor /F (M20)

1. Remove the saddle unit.
See P.8
2. Remove the front cover.
See P.7

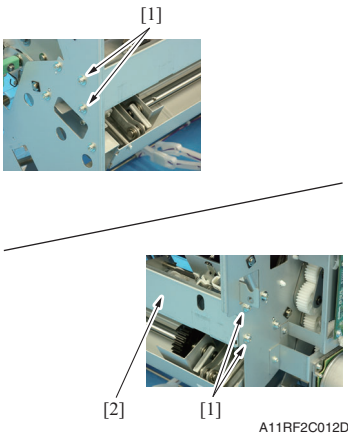

3. Remove four screws [1], and remove the plate [2].

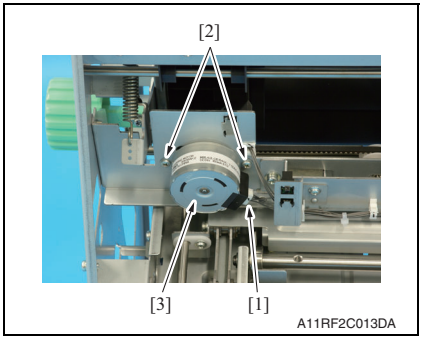

4. Disconnect the connector [1].
5. Remove two screws [2], and remove the center staple alignment motor /F [3].

6. Reinstall the above parts following the removal steps in reverse.

3.3.8 Center staple alignment motor /R (M21)

1. Remove the saddle unit.
See P.8
2. Remove the front cover.
See P.7

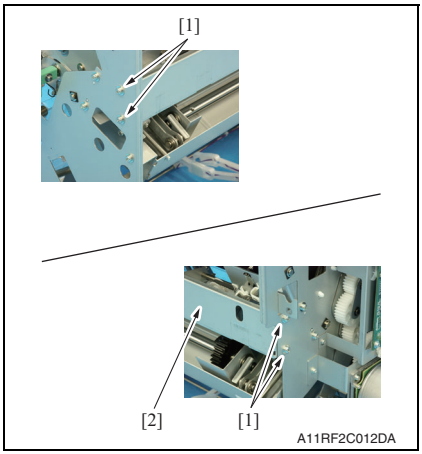

3. Remove four screws [1], and remove the plate [2].

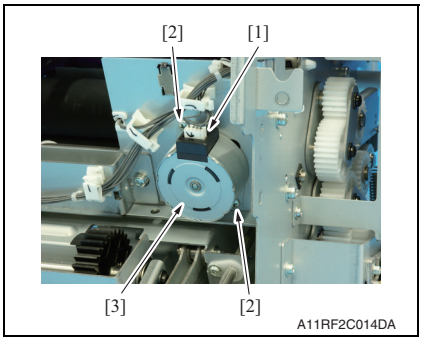

4. Disconnect the connector [1].
5. Remove two screws [2], and remove the center staple alignment motor /R [3].

6. Reinstall the above parts following the removal steps in reverse.

3.3.9 Leading edge stopper motor (M22)

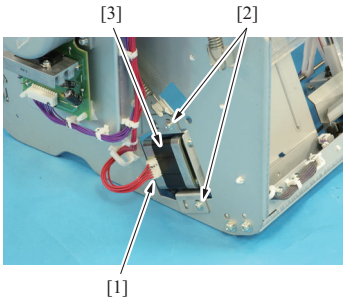

1. Disconnect the connector [1].
2. Remove two screws [2], and remove the leading edge stopper motor assy [3].

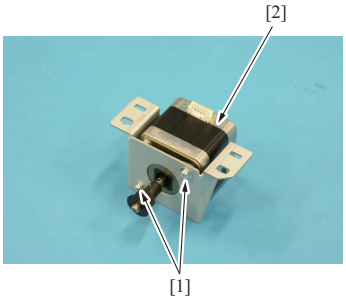

3. Remove two screws [1], and remove the leading edge stopper motor [2].

4. Reinstall the above parts following the removal steps in reverse.

3.3.10 Center staple motor (M23)

1. Remove the stapler unit cover.
See P.8

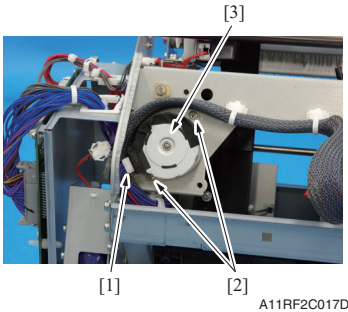

2. Disconnect the connector [1].
3. Remove two screws [2], and remove the center staple motor [3].

4. Reinstall the above parts following the removal steps in reverse.

3.3.11 Center staple paddle lift motor/C (M26)

1. Remove the stapler unit cover.
See P.8

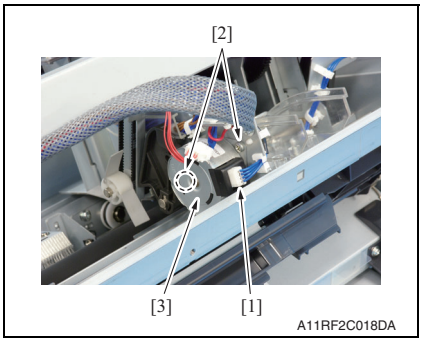

2. Disconnect the connector [1].
3. Remove two screws [2], and remove the center staple paddle lift motor/C [3].
4. Reinstall the above parts following the removal steps in reverse.

3.3.12 Center staple paddle/T (M29)

1. Remove the saddle unit.
See P.8
2. Remove the right cover.
See P.8
3. Remove the stapler unit cover.
See P.8

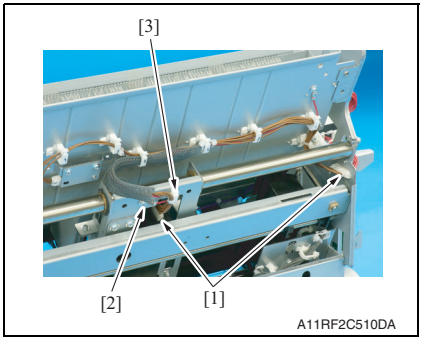

4. Disconnect two connectors [1].
5. Remove the screw [2], and remove the ground earth.
6. Remove the wire saddle [3].

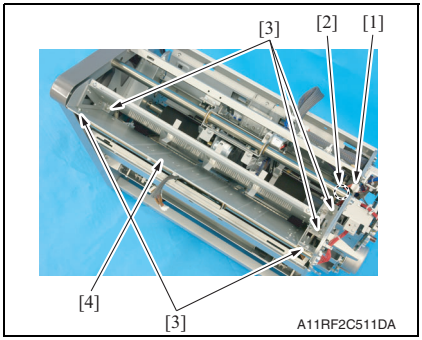

7. Disconnect the connector [1].
8. Remove the harness from the wire saddle [2].
9. Remove five screws [3], and remove the guide plate assy [4].

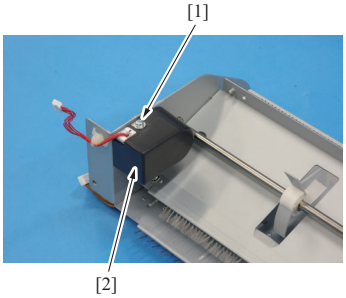

10. Remove the screw [1], and remove the motor cover [2].

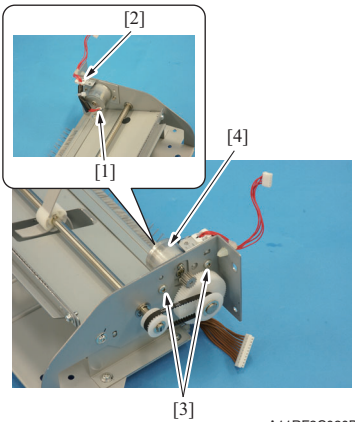

11. Disconnect the connector [1].
12. Remove the harness from the edge cover [2].
13. Remove two screws [3], and remove the center staple paddle/T assy [4].

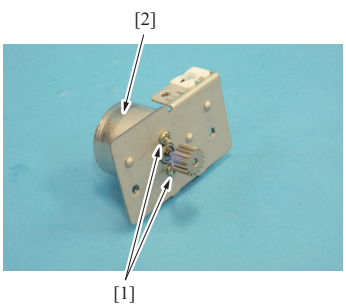

14. Remove two screws [1], and remove the center staple paddle/T [2].

15. Reinstall the above parts following the removal steps in reverse.

3.3.13 Transport motor (M33)

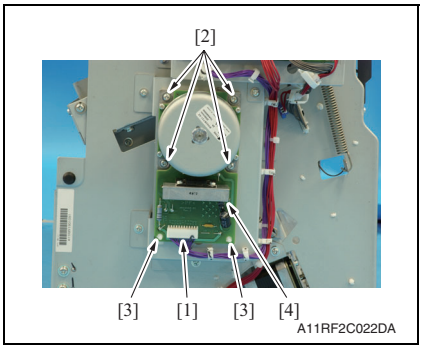

1. Disconnect the connector [1].
2. Remove four screws [2] and two board supports [3], and remove the transport motor [4].

3. Reinstall the above parts following the removal steps in reverse.

3.3.14 Tri-folding change solenoid (SD5)

1. Remove the saddle unit.
See P.8

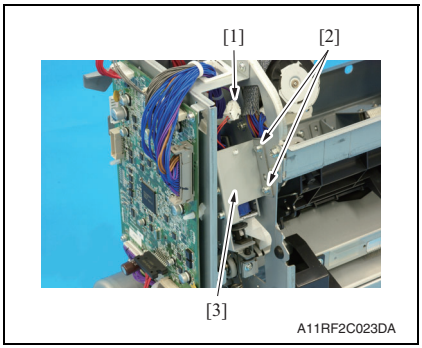

2. Disconnect the connector [1].
3. Remove two screws [2], and remove the tri-folding change solenoid assy [3].

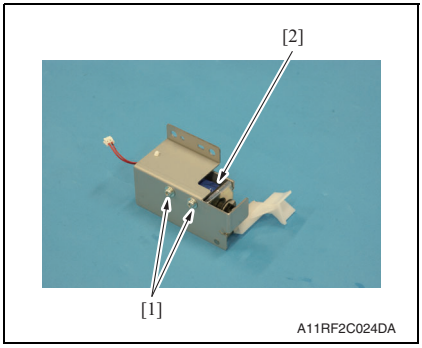

4. Remove two screws [1], and remove the tri-folding change solenoid [2].

5. Reinstall the above parts following the removal steps in reverse.

3.3.15 Exit grip solenoid (SD6)

1. Remove the saddle unit.
See P.8

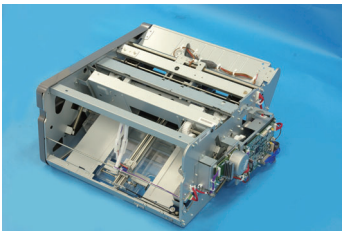

A11RF2C025DA

2. Lay the saddle unit.

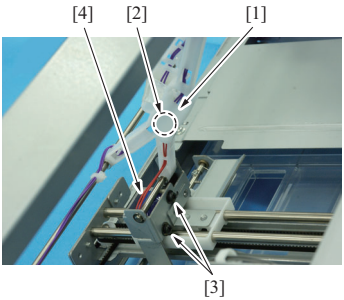

A11RF2C026DA

3. Remove the tape [1], disconnect the connector [2].
4. Remove two screws [3], and remove the exit grip solenoid [4].

5. Reinstall the above parts following the removal steps in reverse.

4. SERVICE TOOL

4.1 CE tool list

Tool name	Shape	Personnel	Parts No.	Remarks
Stapler positioning jig	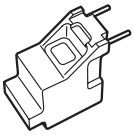 A07RF2C513DA	1	13QEJG010	

ADJUSTMENT/SETTING

5. HOW TO USE THE ADJUSTMENT SECTION

- "Adjustment/Setting" contains detailed information on the adjustment items and procedures for this machine.
- Throughout this "Adjustment/Setting," the default settings are indicated by " ".

Advance checks

Before attempting to solve the customer problem, the following advance checks must be made. Check to see if:

- The power supply voltage meets the specifications.
- The power supply is properly grounded.
- The machine shares the power supply with any other machine that draws large current intermittently (e.g., elevator and air conditioner that generate electric noise).
- The installation site is environmentally appropriate: high temperature, high humidity, direct sunlight, ventilation, etc.; levelness of the installation site.
- The original has a problem that may cause a defective image.
- The density is properly selected.
- The original glass, slit glass, or related part is dirty.
- Correct paper is being used for printing.
- The units, parts, and supplies used for printing (developer, PC drum, etc.) are properly replenished and replaced when they reach the end of their useful service life.
- Toner is not running out.

⚠ CAUTION

- **Be sure to unplug the power cord of the machine before starting the service job procedures.**
- **If it is unavoidably necessary to service the machine with its power turned ON, use utmost care not to be caught in the scanner cables or gears of the exposure unit.**
- **Special care should be used when handling the fusing unit which can be extremely hot.**
- **The developing unit has a strong magnetic field. Keep watches and measuring instruments away from it.**
- **Take care not to damage the PC drum with a tool or similar device.**
- **Do not touch IC pins with bare hands.**

6. MECHANICAL ADJUSTMENT

6.1 Mechanical adjustment of the paper exit section

6.1.1 Second fold position adjustment

This adjustment must be made in the following case:

- **In the tri-fold mode, the width "b" between the 1st and 2nd folds is not within the specified range.**

A. Procedure

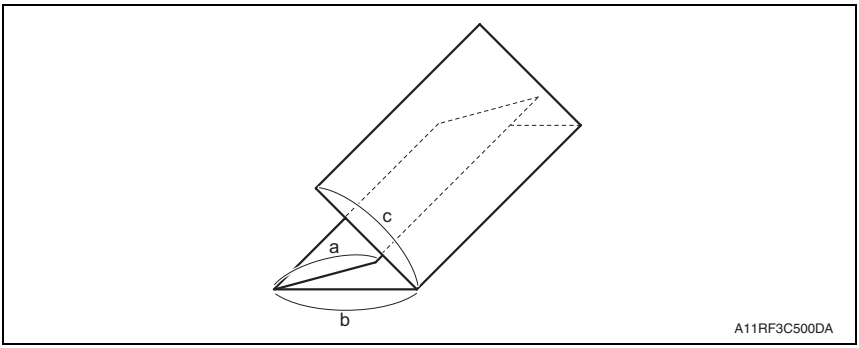

1. Adjust [Tri-Fold Position] in service mode.
See P.606 of the main body service manual.
2. Check the width of the second fold position "b."

Folding position	Standard value			Standard
	A4S	8.5 X 11A	16KS	
a	95mm	89.4mm	88mm	±2mm
b	101mm	95mm	91mm	
c	101mm	95mm	91mm	

3. If the width "b" is not appropriate, follow the steps below for adjustment.
4. Open the front door.
5. Draw out the saddle unit.
6. Open the tri-folding stopper.

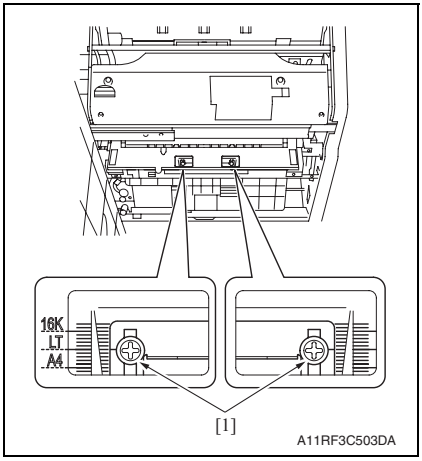

7. Loosen two screws [1], and adjust the tri-folding stopper position.

- To make width a greater:
  Lower the tri-folding stopper.
- To make width a smaller:
  Raise the tri-folding stopper.

8. Make copies again and check the second fold position “b” deviate.

6.1.2 Adjustment for Staple Clinch Failure

This adjustment must be made in the following case:

- **Conduct this adjustment when there is a problem in clinching of the stapler.**

⚠ CAUTION

- **Be careful not to let FS fall down when removing FS from the main body and pulling out the stacker unit from FS. It may cause the injury.**

1. Make a copy in the staple mode.

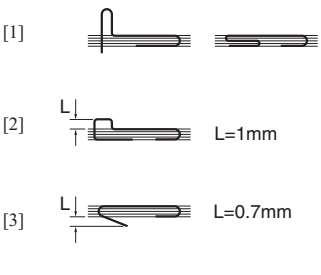

2. Check there is failures in clinching staples as described below.
- There is the bucking [1] of the staple.
- The floating [2] of the staple is more than the standard value (L = 1 mm).
- The bending height [3] of the staple is more than the standard value (L = 0.7 mm).

3. If clinching performance is out of the above specifications, make the following adjustment.

4. Remove the saddle unit.
See P.8 of the SD-508 service manual.
5. Remove the right cover.
See P.8 of the SD-508 service manual.
6. Remove the staple cartridge.

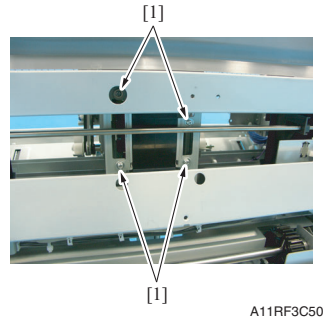

7. Loosen four screws [1] located on the clincher side of the stapler unit.

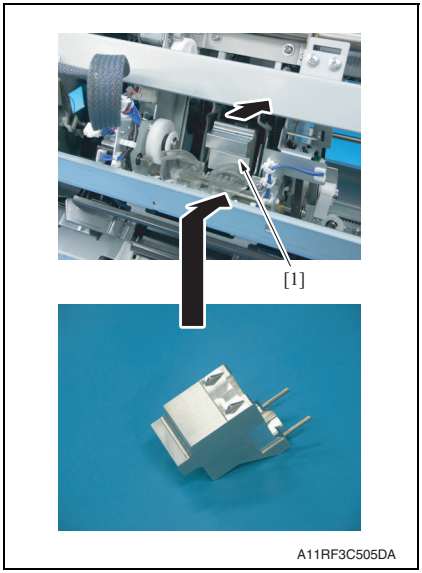

8. Install the stapler positioning jig [1] onto the cartridge setting section.

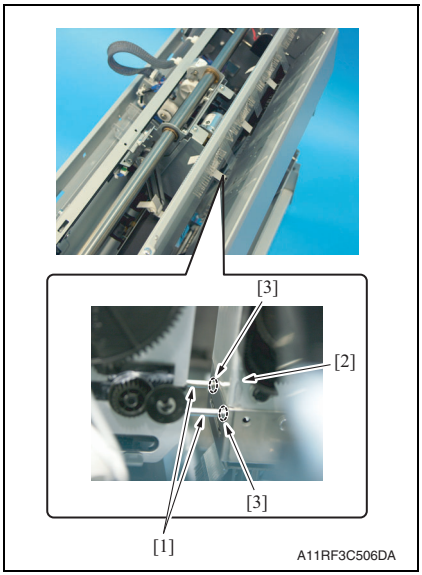

9. Adjust the clincher position so that the two pins [1] of the stapler positioning jig are inserted in the positioning holes [3] of the clincher [2].

10. Tighten four screws that were loosened in step 7.
11. Remove the stapler positioning jig.
12. Reinstall the above parts following the removal steps in reverse.

Blank Page

KONICA MINOLTA

SERVICE MANUAL

FIELD SERVICE

PK-516

2009.07

KONICA MINOLTA BUSINESS TECHNOLOGIES, INC. Ver. 2.0

Revision history

After publication of this service manual, the parts and mechanism may be subject to change for improvement of their performance.
Therefore, the descriptions given in this service manual may not coincide with the actual machine.

When any change has been made to the descriptions in the service manual, a revised version will be issued with a revision mark added as required.

Revision mark:

- To indicate clearly a section revised, △1 is shown at the left margin of the revised section.
  The number inside △1 represents the number of times the revision has been made.

- To indicate clearly a page that contains the revision, ▲1 is shown near the page number of the corresponding page.
  The number inside ▲1 represents the number of times the revision has been made.

NOTE

Revision marks shown in a page are restricted only to the latest ones with the old ones deleted.

- When a page revised in Ver. 2.0 has been changed in Ver. 3.0:
  The revision marks for Ver. 3.0 only are shown with those for Ver. 2.0 deleted.
- When a page revised in Ver. 2.0 has not been changed in Ver. 3.0:
  The revision marks for Ver. 2.0 are left as they are.

Date	Service manual Ver.	Revision mark	Descriptions of revision
2009/07	2.0	△1	Error correction
2009/01	1.0	—	Issue of the first edition

CONTENTS

PK-516

OUTLINE

1. PRODUCT SPECIFICATIONS 1

MAINTENANCE

2. PERIODICAL MAINTENANCE PROCEDURE 3
3. OTHER MAINTENANCE ITEM 4
3.1 Items not allowed to be disassembled and adjusted 4
3.2 Disassembly/reassembly parts list 5
3.3 Disassembly/reassembly procedure 5
3.3.1 Punch kit 5
3.3.2 Punch oscillating motor (M302) 8
3.3.3 Punch drive motor (M301) 8

ADJUSTMENT/SETTING

4. HOW TO USE THE ADJUSTMENT SECTION 11
5. MECHANICAL ADJUSTMENT 12
5.1 Mechanical adjustment of the punch section 12
5.1.1 Punch hole deviation correction 12
5.1.2 Centering adjustment of the punch kit 14

Blank Page

OUTLINE

1. PRODUCT SPECIFICATIONS

A. Type

Name	Punch unit
Type	FS-integrated type punching operation device

B. Functions

Punching method	Stops and punches every paper
No. of holes	2-3 holes / 2-4 holes / 4 holes
Hole diameter/pitch	2 holes / ϕ 8.0 mm / 70 mm pitch - 3 holes / ϕ 6.5 mm / 108 mm pitch 2 holes / ϕ 6.5 mm / 80 mm pitch - 4 holes / ϕ 6.5 mm / 80 mm pitch 4 holes / ϕ 6.5 mm / 70 mm, 21 mm pitch
Supported mode	Punch mode, through mode
Applicable post processing mode	Sort, group, staple

C. Paper type

Size	2 hole/Sweden 4 hole punch setting: A3, B4, A4/A4S, B5/B5S, A5/A5S, 8 x 13, 8 x 13S, 8-1/4 x 13, 8-1/2 x 13, 8-1/8 x 13-1/4, 11 x 17, 8-1/2 x 14, 8-1/2 x 11/8-1/2 x 11S, 5-1/2 x 8-1/2, 5-1/2 x 8-1/2S, 8K, 16K/16KS 7-1/4 x 10-1/2, 7-1/4 x 10-1/2S, 8-2/3 x 13S, 8-1/2 x 13S, 8-1/4 x 13S, 8-1/8 x 13-1/4S, 8-1/2 x 13-1/2S 3 hole/4 hole punch setting: A3, B4, A4, B5 11 x 17, 8 1/2 x 11, 7 1/4 x 10 1/2, 8K, 16K
Supported paper	Plain paper, bond paper, colored paper, coated paper (Main unit specifications prioritized)
⚠1 Weight	64 to 300 g/m^2
Punch prohibited paper	Label paper, tab paper, transparency film, 2nd base paper, holed paper, and the other paper that may interfere with the operation of the punch unit or the punch blade

D. Machine specifications

Power requirements	DC 24 V (supplied from the main body)
	DC 5 V (supplied from the main body)
Max. power consumption	40 W or less
Dimensions	161 mm (W) x 650 mm (D) x 234 mm (H) 6.34 inch (W) x 25.60 inch (D) x 9.21 inch (H)
Weight	4.5 kg (9.92 lb)

E. Operating environment

- Conforms to the operating environment of the main body.

NOTE

- **These specifications are subject to change without notice.**

Blank Page

MAINTENANCE

2. PERIODICAL MAINTENANCE PROCEDURE

- Periodically replaced parts are not employed.

3. OTHER MAINTENANCE ITEM

3.1 Items not allowed to be disassembled and adjusted

A. Paint-locked screws

NOTE

- **To prevent loose screws, a screw lock in blue or green series color is applied to the screws.**
- **The screw lock is applied to the screws that may get loose due to the vibrations and loads created by the use of machine or due to the vibrations created during transportation.**
- **If the screw lock coated screws are loosened or removed, be sure to apply a screw lock after the screws are tightened.**

B. Red-painted screws

NOTE

- **The screws which are difficult to be adjusted in the field are painted in red in order to prevent them from being removed by mistake.**
- **Do not remove or loosen any of the red-painted screws in the field. It should also be noted that, when two or more screws are used for a single part, only one representative screw may be marked with the red paint.**

C. Variable resistors on board

NOTE

- **Do not turn the variable resistors on boards for which no adjusting instructions are given in Adjustment/Setting.**

D. Removal of PWBs

⚠ CAUTION

- **When removing a circuit board or other electrical component, refer to "Handling of PWBs" and follow the corresponding removal procedures.**
- **The removal procedures given in the following omit the removal of connectors and screws securing the circuit board support or circuit board.**
- **Where it is absolutely necessary to touch the ICs and other electrical components on the board, be sure to ground your body.**

3.2 Disassembly/reassembly parts list

Section	Part name	Ref. page
Unit	Punch kit	P.5
Others	Punch oscillating motor (M302)	P.8
	Punch drive motor (M301)	P.8

3.3 Disassembly/reassembly procedure

3.3.1 Punch kit

1. Remove the finisher from the main body.

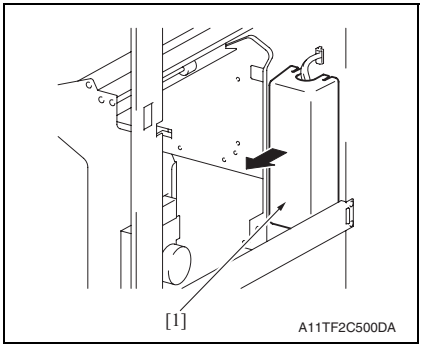

2. Remove the board cover [1].

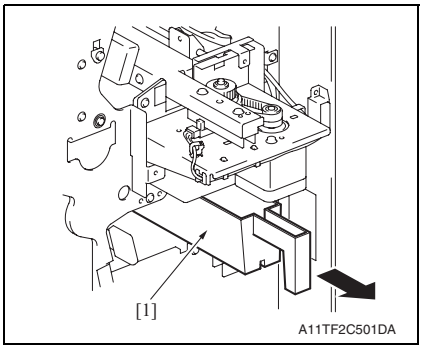

3. Remove the punch scraps box [1].

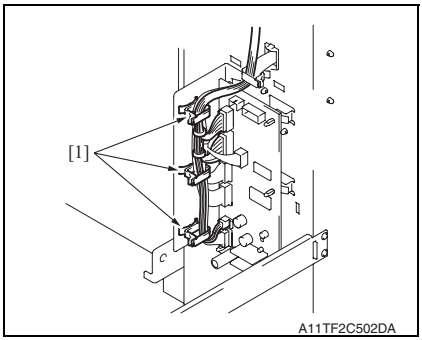

4. Remove the harness from three wire saddles [1].

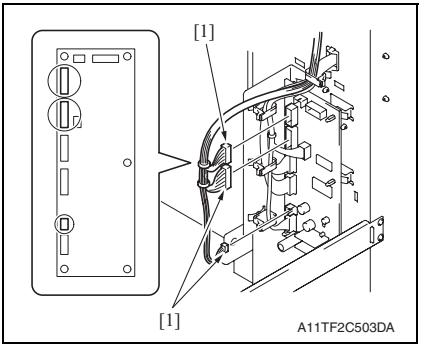

5. Disconnect three connectors [1].

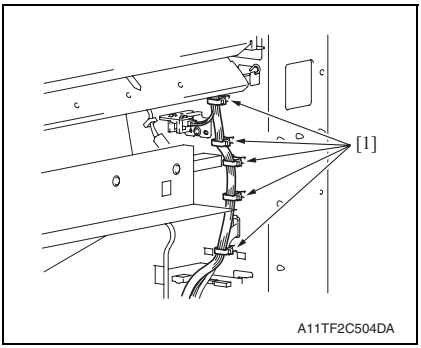

6. Remove the harness from five wire saddles [1].

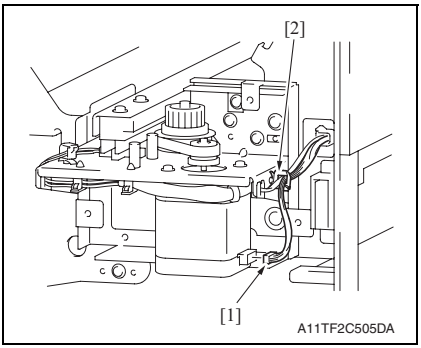

7. Disconnect the connector [1] from the motor.
8. Remove the harness from the wire saddle [2].

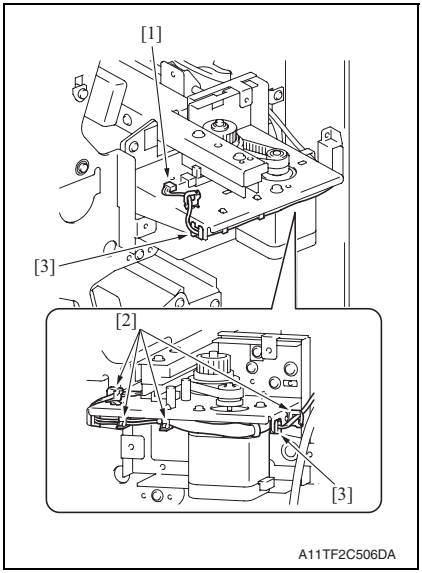

9. Disconnect the connector [1] of the sensor.

10. Remove the harness from four wire saddles [2] and two edge covers [3].

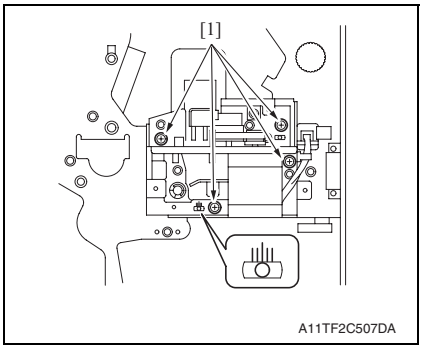

11. Remove four screws [1].

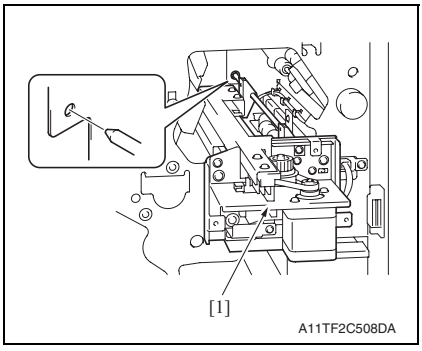

12. Pull the punch kit [1] out and remove it from the finisher.

13. Reinstall the above parts following the removal steps in reverse.

3.3.2 Punch oscillating motor (M302)

1. Remove the punch kit.
See P.5

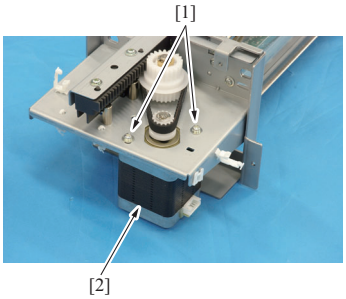

2. Remove two screws [1], and remove the punch oscillating motor [2].

3. Reinstall the above parts following the removal steps in reverse.

3.3.3 Punch drive motor (M301)

1. Remove the punch kit.
See P.5

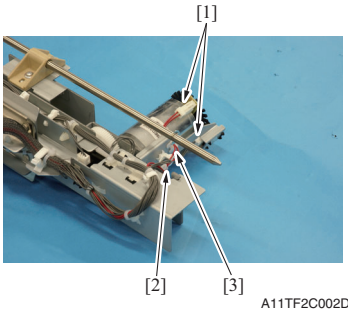

2. Disconnect two connectors [1].
3. Remove the harness from the wire saddle [2] and the edge cover [3].

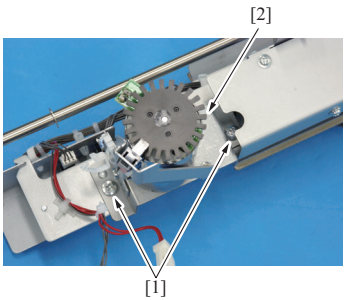

4. Remove two screws [1], and remove the punch drive motor assy [2].

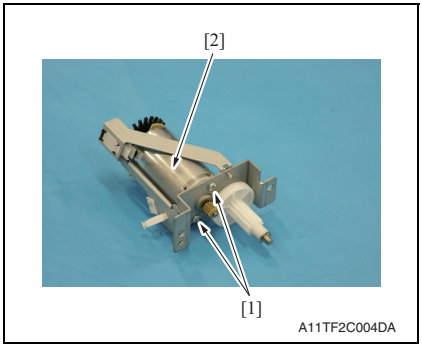

5. Remove two screws [1], and remove the punch drive motor [2].

6. Reinstall the above parts following the removal steps in reverse.

Blank Page

ADJUSTMENT/SETTING

4. HOW TO USE THE ADJUSTMENT SECTION

- "Adjustment/Setting" contains detailed information on the adjustment items and procedures for this machine.
- Throughout this "Adjustment/Setting," the default settings are indicated by " ".

Advance checks

Before attempting to solve the customer problem, the following advance checks must be made. Check to see if:

- The power supply voltage meets the specifications.
- The power supply is properly grounded.
- The machine shares the power supply with any other machine that draws large current intermittently (e.g., elevator and air conditioner that generate electric noise).
- The installation site is environmentally appropriate: high temperature, high humidity, direct sunlight, ventilation, etc.; levelness of the installation site.
- The original has a problem that may cause a defective image.
- The density is properly selected.
- The original glass, slit glass, or related part is dirty.
- Correct paper is being used for printing.
- The units, parts, and supplies used for printing (developer, PC drum, etc.) are properly replenished and replaced when they reach the end of their useful service life.
- Toner is not running out.

⚠ CAUTION

- **Be sure to unplug the power cord of the machine before starting the service job procedures.**
- **If it is unavoidably necessary to service the machine with its power turned ON, use utmost care not to be caught in the scanner cables or gears of the exposure unit.**
- **Special care should be used when handling the fusing unit which can be extremely hot.**
- **The developing unit has a strong magnetic field. Keep watches and measuring instruments away from it.**
- **Take care not to damage the PC drum with a tool or similar device.**
- **Do not touch IC pins with bare hands.**

5. MECHANICAL ADJUSTMENT

5.1 Mechanical adjustment of the punch section

5.1.1 Punch hole deviation correction

This adjustment must be made in the following case:

- **The punch holes are on a slanted line.**

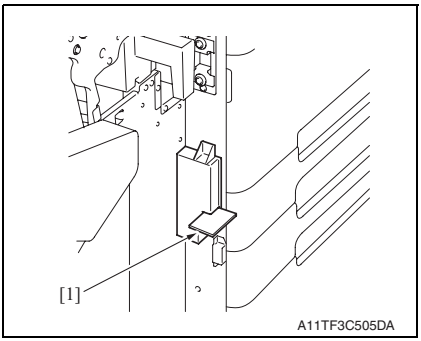

1. Insert a piece of paper [1] into the finisher's interlock to turn it ON.
2. Turn ON the Main and Sub power switches of the machine, and make sample copies for both the single-side and double-side with any tray in Punch mode.
3. Fold the output paper in half and check whether the punch holes are aligned. If the punch holes are misaligned, make the following adjustment.

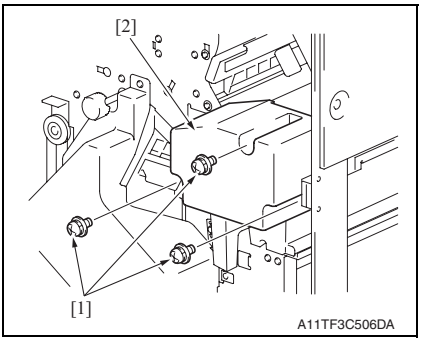

4. Remove three screws [1], and remove the punch kit cover [2].

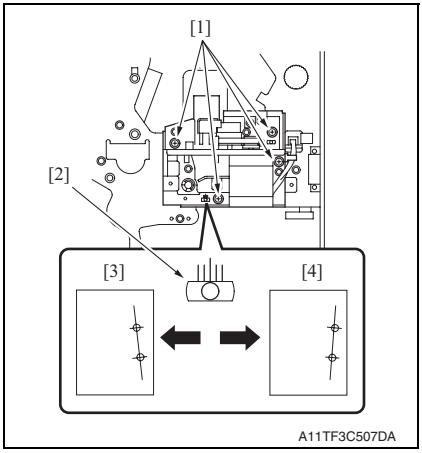

5. Loosen four screws [1] and move the punch kit to the left or right by the amount that needs to be corrected referring to the mark [2].
- Wider at the rear [3]: Move the punch kit to the left.
- Wider at the front [4]: Move the punch kit to the right.

6. Make copies in punch mode again and check that punch holes are not on the slanted line.

5.1.2 Centering adjustment of the punch kit

This adjustment must be made in the following case:

- **Centering is not correct in punching.**

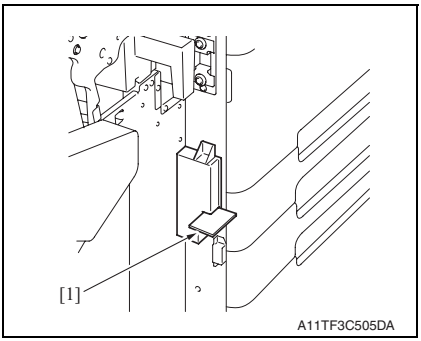

1. Insert a piece of paper [1] into the finisher's interlock to turn it ON.

2. Place approx. 10 sheets of A4 paper on the manual feed tray and make copies in punch mode.

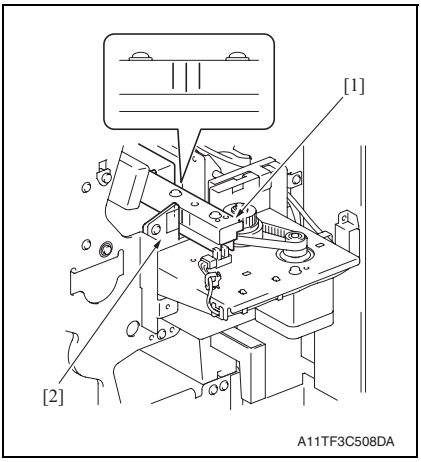

3. When the machine is punching, the connecting plate [1] stops. Check the alignment between the middle line (among the three lines on the connecting plate) and the plate [2] shown in the illustration.

4. If the punch holes are misaligned significantly, make the following adjustment.

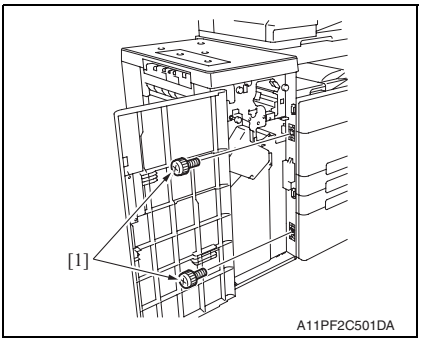

5. Remove two screws [1] and slide the finisher as shown in the illustration.

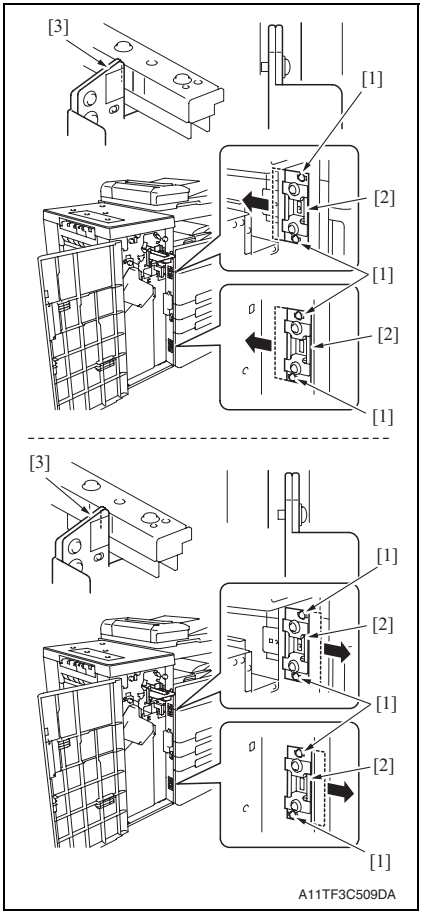

6. Loosen two screws [1] each and move the two mounting plates [2] backward or frontward by the amount that corrects misalignment.

- If the plate [3] is off to the backward: Move the mounting plate [2] to the backward.
- If the plate [3] is off to the frontward: Move the mounting plate [2] to the frontward.

7. Make copies in punch mode with paper fed from each tray and perform a check as shown in step 3.

8. If punch holes are still deviated from the appropriate position, make centering adjustment in each tray.

Blank Page

KONICA MINOLTA

SERVICE MANUAL

FIELD SERVICE

JS-602

2009.07

KONICA MINOLTA BUSINESS TECHNOLOGIES, INC. Ver. 1.0

Revision history

After publication of this service manual, the parts and mechanism may be subject to change for improvement of their performance.
Therefore, the descriptions given in this service manual may not coincide with the actual machine.

When any change has been made to the descriptions in the service manual, a revised version will be issued with a revision mark added as required.

Revision mark:

- To indicate clearly a section revised, is shown at the left margin of the revised section.
  The number inside represents the number of times the revision has been made.

- To indicate clearly a page that contains the revision, is shown near the page number of the corresponding page.
  The number inside represents the number of times the revision has been made.

NOTE

Revision marks shown in a page are restricted only to the latest ones with the old ones deleted.

- When a page revised in Ver. 2.0 has been changed in Ver. 3.0:
  The revision marks for Ver. 3.0 only are shown with those for Ver. 2.0 deleted.
- When a page revised in Ver. 2.0 has not been changed in Ver. 3.0:
  The revision marks for Ver. 2.0 are left as they are.

Date	Service manual Ver.	Revision mark	Descriptions of revision
2009/07	1.0	—	Issue of the first edition

CONTENTS

JS-602

OUTLINE

1. PRODUCT SPECIFICATIONS 1

MAINTENANCE

2. PERIODICAL MAINTENANCE PROCEDURE 3
2.1 Paper exit section 3
2.1.1 Cleaning of the transport rollers/exit rollers 3
3. OTHER MAINTENANCE ITEM 4
3.1 Items not allowed to be disassembled and adjusted 4
3.2 Disassembly/reassembly parts list 5
3.3 Disassembly/reassembly procedure 5
3.3.1 Separator 5
3.3.2 Front cover 6
3.3.3 Rear cover 6
3.3.4 3rd entrance switching solenoid (SD404) 7

Blank Page

OUTLINE

1. PRODUCT SPECIFICATIONS

A. Type

Name	Job separator
Type	Add-on finishing device externally mounted on top of finisher
Installation	Fixed to finisher
Document alignment	Center

B. Functions

Modes	Group, Sort (during copy, print, or fax mode)

C. Paper type

Type	Size	Weight	Tray capacity
Plain paper	A5S to A3 5-1/2 × 8-1/2S to 11 × 17	64 to 90 g/m^2 17 to 24 lb	100 sheets: A4, 8-1/2 × 11 (80 g/m^2, 21.25 lb) 50 sheets: except A4, 8-1/2 × 11 (80 g/m^2, 21.25 lb) (Height: up to 28 mm, 1.1 inch)

D. Machine specifications

Power requirements	DC 5 V, DC 24 V (supplied from finisher)
Dimensions	341 mm (W) × 537 mm (D) × 149 mm (H) 13.43 inch (W) × 21.14 inch (D) × 5.87 inch (H)
Weight	1.75 kg (3.86 lb)

E. Operating environment

Conforms to the operating environment of the main body.

NOTE

- **These specifications are subject to change without notice.**

Blank Page

MAINTENANCE

2. PERIODICAL MAINTENANCE PROCEDURE

2.1 Paper exit section

NOTE

- **The alcohol described in the cleaning procedure of maintenance represents the isopropyl alcohol.**

2.1.1 Cleaning of the transport rollers/exit rollers

A. Periodically cleaning parts/cycle

- Transport roller: Every 100,000 counts
- Exit roller: Every 100,000 counts

B. Procedure

1. Open the cover.

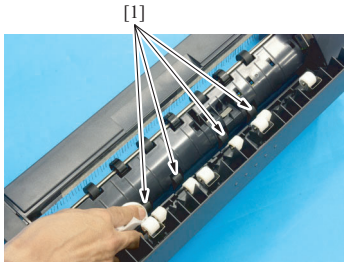

A10CF2C001DA

2. Using a cleaning pad with alcohol, wipe the transport rollers [1] clean of dirt.

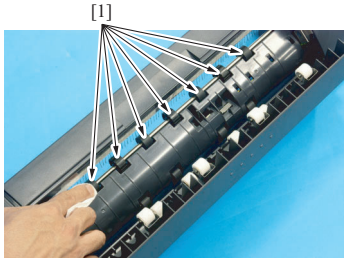

A10CF2C002DA

3. Using a cleaning pad with alcohol, wipe the exit rollers [1] clean of dirt.

3. OTHER MAINTENANCE ITEM

3.1 Items not allowed to be disassembled and adjusted

A. Paint-locked screws

NOTE

- **To prevent loose screws, a screw lock in blue or green series color is applied to the screws.**
- **The screw lock is applied to the screws that may get loose due to the vibrations and loads created by the use of machine or due to the vibrations created during transportation.**
- **If the screw lock coated screws are loosened or removed, be sure to apply a screw lock after the screws are tightened.**

B. Red-painted screws

NOTE

- **The screws which are difficult to be adjusted in the field are painted in red in order to prevent them from being removed by mistake.**
- **Do not remove or loosen any of the red-painted screws in the field. It should also be noted that, when two or more screws are used for a single part, only one representative screw may be marked with the red paint.**

C. Variable resistors on board

NOTE

- **Do not turn the variable resistors on boards for which no adjusting instructions are given in Adjustment/Setting.**

D. Removal of PWBs

⚠ CAUTION

- **When removing a circuit board or other electrical component, refer to "Handling of PWBs" and follow the corresponding removal procedures.**
- **The removal procedures given in the following omit the removal of connectors and screws securing the circuit board support or circuit board.**
- **Where it is absolutely necessary to touch the ICs and other electrical components on the board, be sure to ground your body.**

3.2 Disassembly/reassembly parts list

Section	Part name	Ref. page
Unit	Separator	P.5
Exterior parts	Front cover	P.6
	Rear cover	P.6
Other	3rd entrance switching solenoid (SD404)	P.7

3.3 Disassembly/reassembly procedure

3.3.1 Separator

1. Remove the front cover.
   See P.6
2. Remove the rear cover.
   See P.6

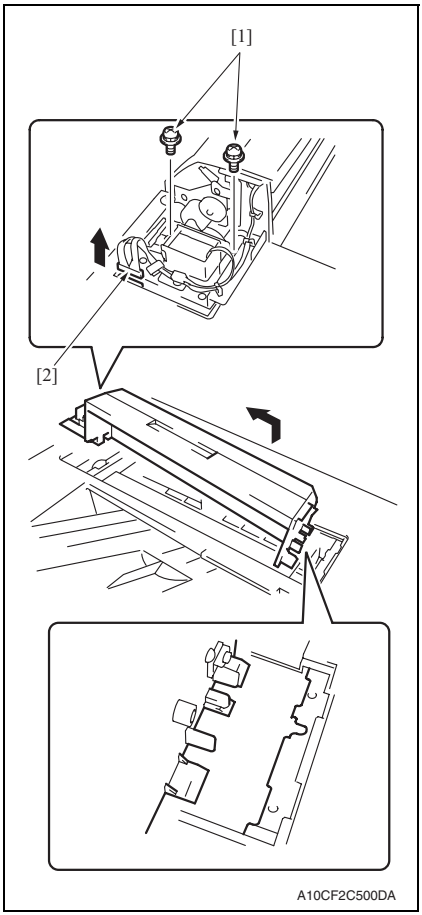

3. Remove two screws [1] and connector [2], and remove the separator [3].

3.3.2 Front cover

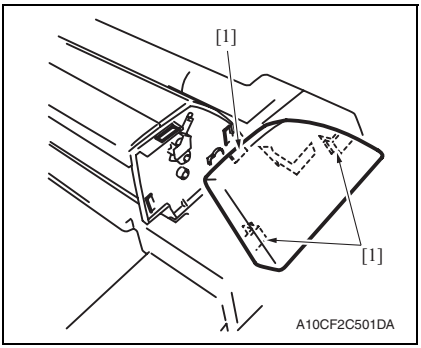

1. Unlock three tabs [1], and remove the front cover [2].

2. Reinstall the above parts following the removal steps in reverse.

3.3.3 Rear cover

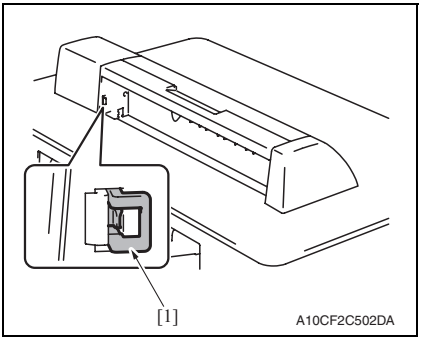

1. Unlock the tab [1], and remove the spacer [2].

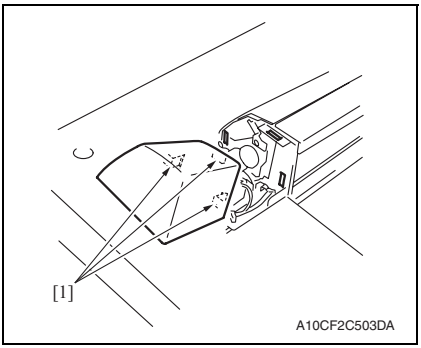

2. Unlock three tabs [1], and remove the rear cover [2].

3. Reinstall the above parts following the removal steps in reverse.

3.3.4 3rd entrance switching solenoid (SD404)

1. Remove the rear cover.
See P.6

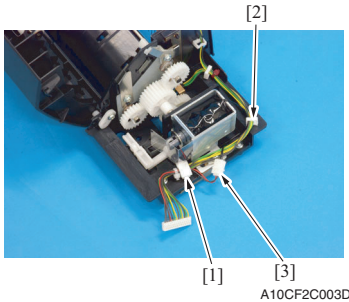

2. Remove the harness from the wire saddle [1] and edge cover [2].
3. Disconnect the connector [3].

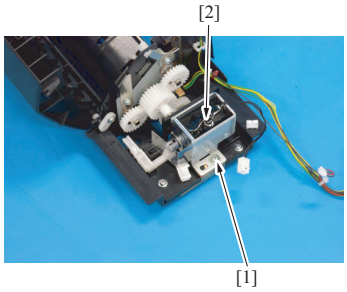

4. Remove the screw [1], and remove the 3rd entrance switching solenoid [2].

5. Reinstall the above parts following the removal steps in reverse.

Blank Page

KONICA MINOLTA

SERVICE MANUAL

FIELD SERVICE

PI-505

2009.07

KONICA MINOLTA BUSINESS TECHNOLOGIES, INC. Ver. 1.0

Revision history

After publication of this service manual, the parts and mechanism may be subject to change for improvement of their performance.
Therefore, the descriptions given in this service manual may not coincide with the actual machine.

When any change has been made to the descriptions in the service manual, a revised version will be issued with a revision mark added as required.

Revision mark:

- To indicate clearly a section revised, is shown at the left margin of the revised section.
  The number inside represents the number of times the revision has been made.

- To indicate clearly a page that contains the revision, is shown near the page number of the corresponding page.
  The number inside represents the number of times the revision has been made.

NOTE

Revision marks shown in a page are restricted only to the latest ones with the old ones deleted.

- When a page revised in Ver. 2.0 has been changed in Ver. 3.0:
  The revision marks for Ver. 3.0 only are shown with those for Ver. 2.0 deleted.
- When a page revised in Ver. 2.0 has not been changed in Ver. 3.0:
  The revision marks for Ver. 2.0 are left as they are.

2009/07	1.0	—	Issue of the first edition
Date	Service manual Ver.	Revision mark	Descriptions of revision

CONTENTS

PI-505

OUTLINE

1. PRODUCT SPECIFICATIONS 1

MAINTENANCE

2. PERIODICAL MAINTENANCE PROCEDURE 3
2.1 Paper feed section 3
2.1.1 Replacing the pick-up roller /Up and the feed roller /Up 3
2.1.2 Replacing the pick-up roller /Lw and the feed roller /Lw 5
2.1.3 Replacing the separation roller /Up and the torque limiter /Up 6
2.1.4 Replacing the separation roller /Lw and the torque limiter /Lw 7
3. OTHER MAINTENANCE ITEM 8
3.1 Items not allowed to be disassembled and adjusted 8
3.2 Disassembly/reassembly parts list 9
3.3 Cleaning parts list 9
3.4 Disassembly/reassembly procedure 9
3.4.1 Upper cover 9
3.4.2 Rear cover 10
3.4.3 Operation panel cover assy 10
3.4.4 Post inserter 11
3.4.5 PI drive board (PIDB) 12
3.4.6 PI control board (PIOB) 13
3.5 Cleaning point 13
3.5.1 Pick-up roller /Up, feed roller /Up, separationroller /Up 13
3.5.2 Pick-up roller /Lw, feed roller /Lw, separationroller /Lw 14
3.5.3 Transport roller /Up 16
3.5.4 Transport roller /Lw 16

ADJUSTMENT/SETTING

4. HOW TO USE THE ADJUSTMENT SECTION 17
5. MECHANICAL ADJUSTMENT 18
5.1 PI displacement adjustment (with PK-516 installed) 18
5.2 PI tilt adjustment (with PK-516 installed) 20

Blank Page

OUTLINE

1. PRODUCT SPECIFICATIONS

A. Type

Name	Post inserter unit
Type	Torque limiter separation type seat feeding device

B. Functions

Auto sheet feeding (online operation)	Feeds the sheet to finisher automatically under the instruction from the main body.
Manual sheet feeding (offline operation)	Feeds the sheet to finisher under the instruction from the operation panel of PI. You can select the following 5 post processing modes: • 1 staple/back mode • 2 staples (flat-stapling) mode • Punch mode (when PK-516 is installed on finisher) • Saddle stitching mode (when installed on SD-508) • Tri-folding mode (when installed on SD-508)

C. Paper type

Size	Tray /Up	A4/A4S, B5/B5S, A5 8 1/2 x 11, 8 1/2 x 11S, 5 1/2 x 8 1/2, 7 1/4 x 10 1/2S, 16K, 16KS Custom paper (Max. 311.1 x 297 mm, Min. 182 x 139 mm)
	Tray /Lw	A3, B4, A4/A4S, B5/B5S, A5 8 x 13S, 8 1/4 x 13S, 8 1/2 x 13S, 8 1/8 x 13 1/4S, SRA4S, 12 x 18, 11 x 17, 8 1/2 x 14, 8 1/2 x 11, 8 1/2 x 11S, 5 1/2 x 8 1/2, 8K, 16K, 16KS, 7 1/4 x 10 1/2, 7 1/4 x 10 1/2S Custom paper (Max. 311.1 x 457.2 mm, Min. 182 x 139 mm)
Type	Plain paper, recycle paper, color paper, special paper, coated paper, high-quality paper	
Weight	64 g/m² to 209 g/m²	
Capacity	Tray /Up	200 sheets (80 g/m²) or 30 mm or less in height
	Tray /Lw	200 sheets (80 g/m²) or 30 mm or less in height

D. Machine specifications

Power requirements	DC 24 V, DC 5 V (supplied from the main body)
Max. power consumption	30 W or less
Dimensions	511 mm (W) x 635 mm (D) x 220 mm (H) 20 inch (W) x 25 inch (D) x 8.75 inch (H)
Weight	10.5 kg (23.25 lb)

E. Operating environment

- Conforms to the operating environment of the main body.

NOTE

- **These specifications are subject to change without notice.**

Blank Page

MAINTENANCE

2. PERIODICAL MAINTENANCE PROCEDURE

2.1 Paper feed section

2.1.1 Replacing the pick-up roller /Up and the feed roller /Up

A. Periodically replaced parts/cycle

- Pick-up roller /Up: Every 200,000 counts
- Feed roller /Up: Every 100,000 counts

B. Replacing procedure

1. Remove the upper cover.
See P.9

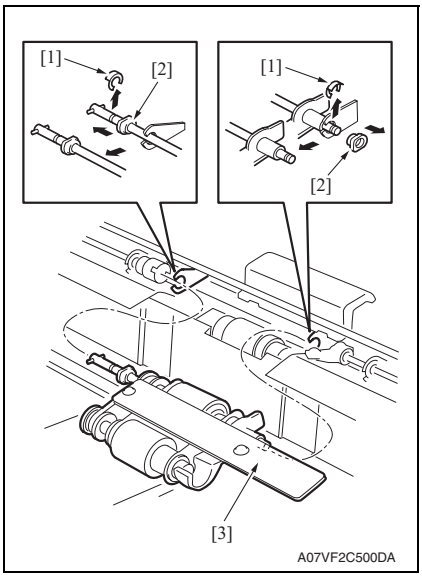

2. Remove two C-clips [1], and then slide two bearings [2] at the both sides and remove the feed roller assy /Up [3].

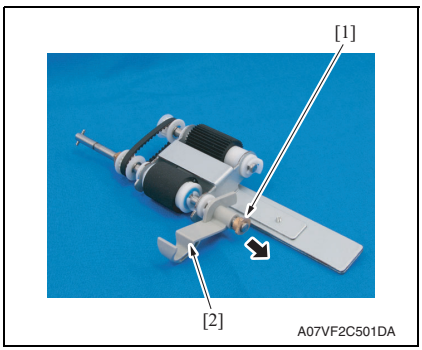

3. Remove the bearing [1] and remove the actuator [2].

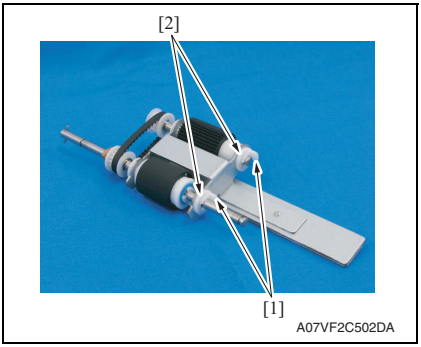

4. Remove two C-clips [1] and remove two bearings [2].

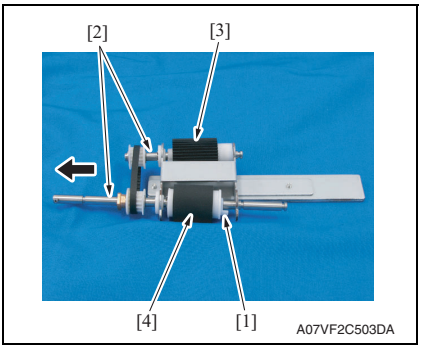

5. Remove the C-clip [1].
6. Slide two roller shafts [2] to the arrow-marked direction to remove the pick-up roller /Up [3] and the feed roller /Up [4].

NOTE

- **Reinstalling the pick-up roller and the feed roller with the blue faces of the one-way clutches of the pick-up roller and the feed roller face to the front.**

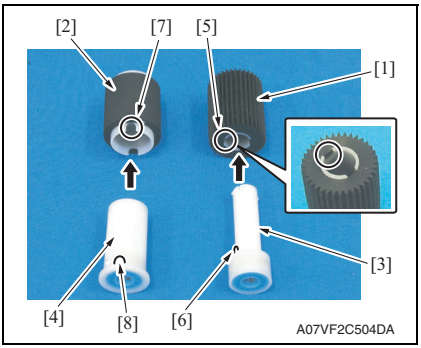

7. Remove the pick-up roller [1] and the feed roller [2] from the one-way clutches [3] and [4].

NOTE

- **When reinstalling the pick-up roller [1], be sure to insert its cutout [5] over the protrusion [6] of the one-way clutch [3].**
- **When reinstalling the feed roller [2], be sure to insert its cutout [7] over the protrusion [8] of the one-way clutch [4].**

8. To reinstall, reverse the order of removal.

2.1.2 Replacing the pick-up roller /Lw and the feed roller /Lw

A. Periodically replaced parts/cycle

- Pick-up roller /Lw: Every 200,000 counts
- Feed roller /Lw: Every 100,000 counts

B. Replacing procedure

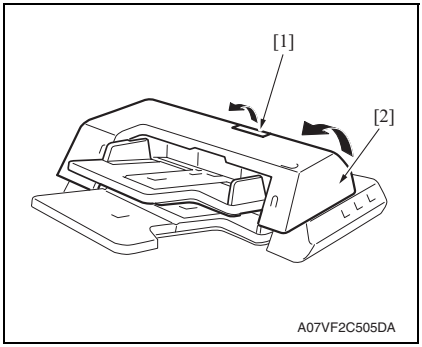

1. Pull the release lever [1] and open the upper door [2].

2. Take steps 2 to 7 in the replacement procedure of the pick-up roller /Up and feed roller /Up.
See P.3

3. To reinstall, reverse the order of removal.

2.1.3 Replacing the separation roller /Up and the torque limiter /Up

A. Periodically replaced parts/cycle

- Separation roller /Up: Every 100,000 counts
- Torque limiter /Up: Every 600,000 counts

B. Replacing procedure

1. Remove the upper cover.
See P.9

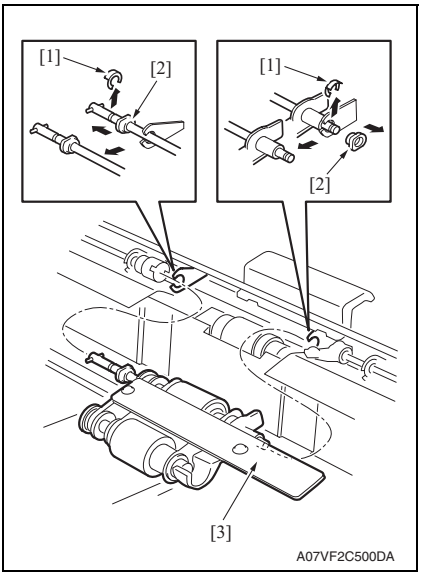

2. Remove two C-clips [1], and then slide two bearings [2] at the both sides and remove the feed roller assy /Up [3].

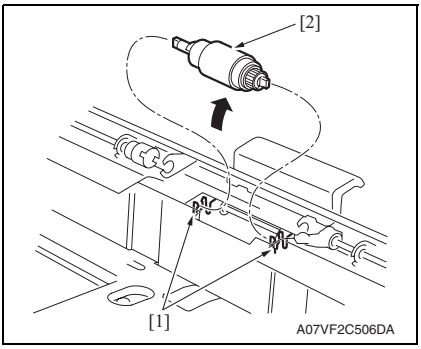

3. Release hooks [1] at the both sides, and then lift up and remove the separation roller assy /Up [2].

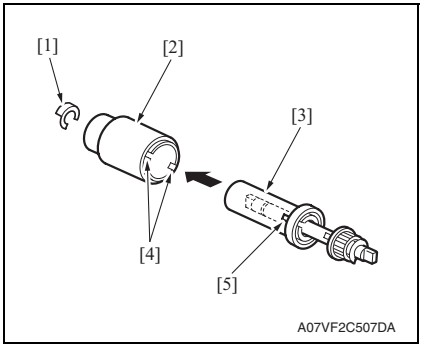

4. Remove the C-clip [1] and remove the separation roller /Up [2] and the torque limiter /Up [3].

NOTE

- **Install the separation roller with two notches [4] face to the front and be aligned with the prong [5].**

5. To reinstall, reverse the order of removal.

2.1.4 Replacing the separation roller /Lw and the torque limiter /Lw

A. Periodically replaced parts/cycle

- Separation roller /Lw: Every 100,000 counts
- Torque limiter /Lw: Every 600,000 counts

B. Replacing procedure

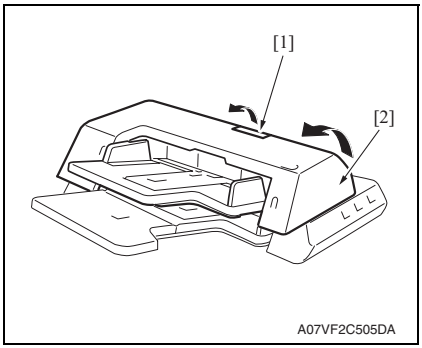

1. Pull the release lever [1] and open the upper door [2].

2. Take steps 2 to 4 in the replacement procedure of the separation roller /Up and torque limiter /Up.
See P.6

3. To reinstall, reverse the order of removal.

3. OTHER MAINTENANCE ITEM

3.1 Items not allowed to be disassembled and adjusted

A. Paint-locked screws

NOTE

- **To prevent loose screws, a screw lock in blue or green series color is applied to the screws.**
- **The screw lock is applied to the screws that may get loose due to the vibrations and loads created by the use of machine or due to the vibrations created during transportation.**
- **If the screw lock coated screws are loosened or removed, be sure to apply a screw lock after the screws are tightened.**

B. Red-painted screws

NOTE

- **The screws which are difficult to be adjusted in the field are painted in red in order to prevent them from being removed by mistake.**
- **Do not remove or loosen any of the red-painted screws in the field. It should also be noted that, when two or more screws are used for a single part, only one representative screw may be marked with the red paint.**

C. Variable resistors on board

NOTE

- **Do not turn the variable resistors on boards for which no adjusting instructions are given in Adjustment/Setting.**

D. Removal of PWBs

⚠ CAUTION

- **When removing a circuit board or other electrical component, refer to "Handling of PWBs" and follow the corresponding removal procedures.**
- **The removal procedures given in the following omit the removal of connectors and screws securing the circuit board support or circuit board.**
- **Where it is absolutely necessary to touch the ICs and other electrical components on the board, be sure to ground your body.**

3.2 Disassembly/reassembly parts list

Section	Part name	Ref. page
Exterior parts	Upper cover	P.9
	Rear cover	P.10
	Operation panel cover assy	P.10
Unit	Post inserter	P.11
Board and etc.	PI drive board (PIDB)	P.12
	PI control board (PIOB)	P.13

3.3 Cleaning parts list

Section	Part name	Ref. page
Feed section	Pick-up roller /Up	P.13
	Pick-up roller /Lw	P.14
	Feed roller /Up	P.13
	Feed roller /Lw	P.14
	Separation roller /Up	P.13
	Separation roller /Lw	P.14
Transport section	Transport roller /Up	P.16
	Transport roller /Lw	P.16

3.4 Disassembly/reassembly procedure

3.4.1 Upper cover

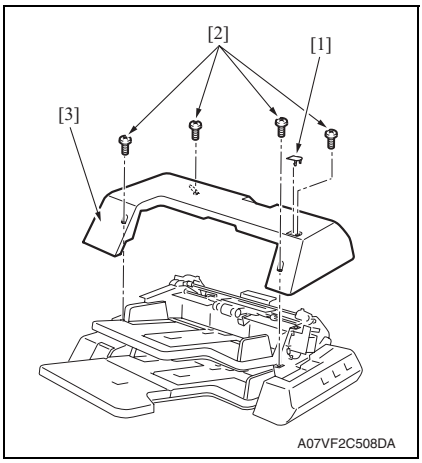

1. Remove the cap [1].
2. Remove four screws [2] and remove the upper cover [3].

3. Reinstall the above parts following the removal steps in reverse.

3.4.2 Rear cover

1. Remove the upper cover.
See P.9

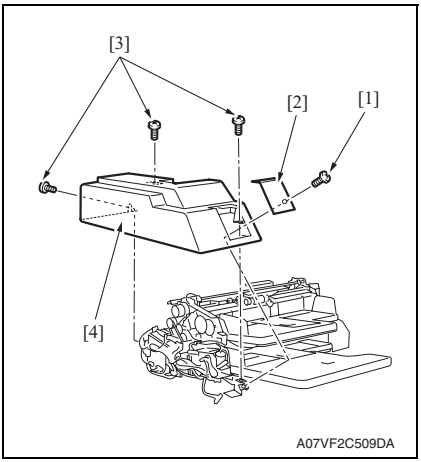

2. Remove the screw [1] and remove the connector cover [2].
3. Remove three screws [3] and remove the rear cover [4].

4. Reinstall the above parts following the removal steps in reverse.

3.4.3 Operation panel cover assy

1. Remove the upper cover.
See P.9

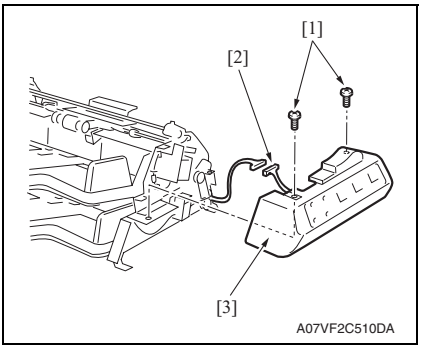

2. Remove two screws [1], disconnect the connector [2] and remove the operation panel assy [3].

3. Reinstall the above parts following the removal steps in reverse.

3.4.4 Post inserter

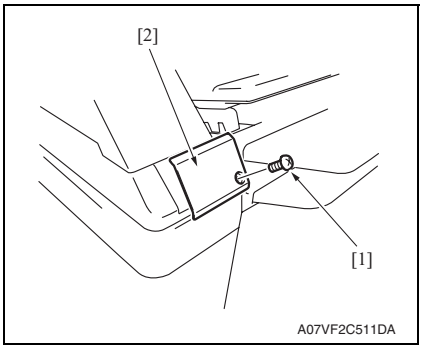

1. Remove the screw [1] and remove the connector cover [2].

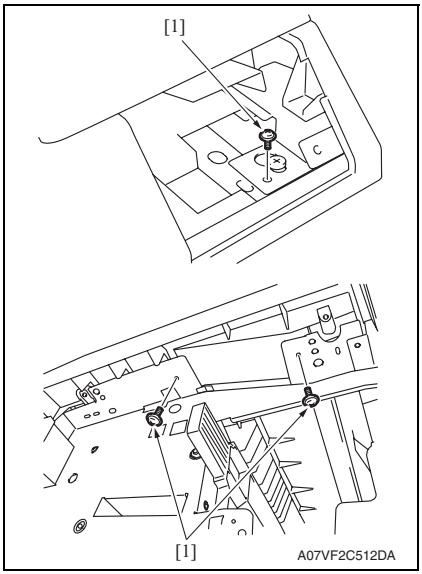

2. Open the front door of the finisher.
3. Remove three screws [1].

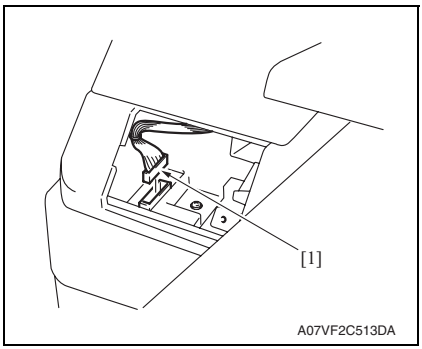

4. Disconnect the connector [1].

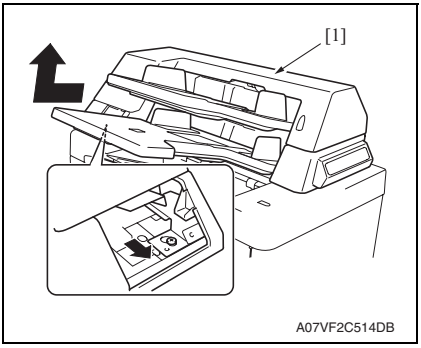

5. Slide the post inserter [1] in the direction of arrow and remove it.

6. Reinstall the above parts following the removal steps in reverse.

3.4.5 PI drive board (PIDB)

1. Remove the rear cover.
See P.10

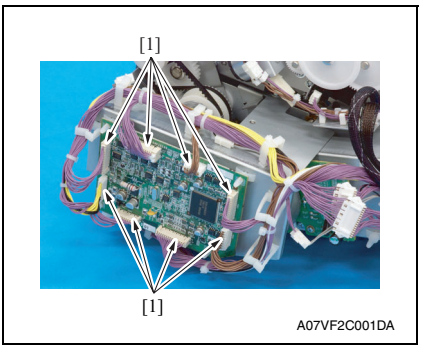

2. Disconnect eight connectors [1] from the PI drive board.

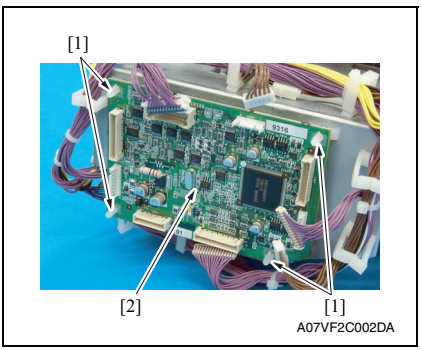

3. Remove four board supports [1] and remove the PI drive board [2].

4. Reinstall the above parts following the removal steps in reverse.

3.4.6 PI control board (PIOB)

1. Remove the operation panel cover assy.
See P.10

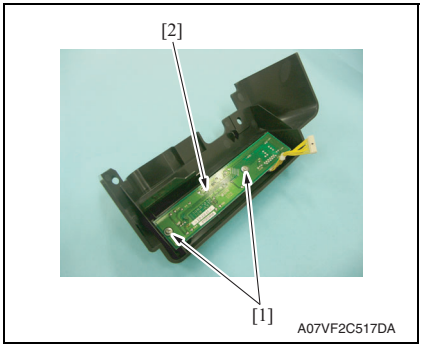

2. Remove two screws [1] and remove the PI control board [2].

3. Reinstall the above parts following the removal steps in reverse.

3.5 Cleaning point

NOTE

- **The alcohol described in the cleaning procedure of maintenance represents the isopropyl alcohol.**

3.5.1 Pick-up roller /Up, feed roller /Up, separationroller /Up

1. Remove the upper cover.
See P.9

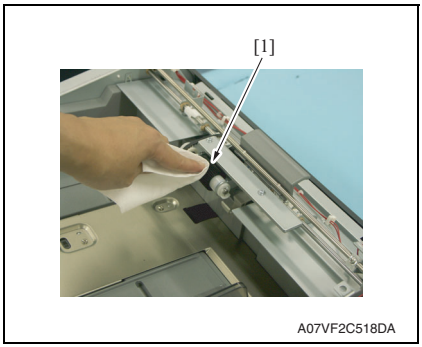

2. Using a cleaning pad dampened with alcohol, wipe the pick-up roller /Up [1] clean of dirt.

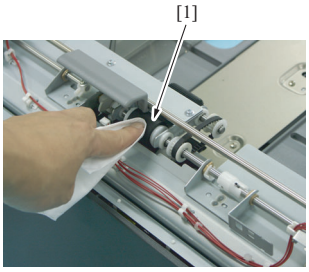

A07VF2C519DA

3. Using a cleaning pad dampened with alcohol, wipe the feed roller /Up [1] clean of dirt.

4. Remove the separation roller assy /Up. See P.6

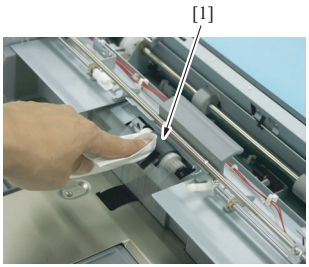

A07VF2C520DA

5. Using a cleaning pad dampened with alcohol, wipe the separation roller / Up [1] clean of dirt.

3.5.2 Pick-up roller /Lw, feed roller /Lw, separationroller /Lw

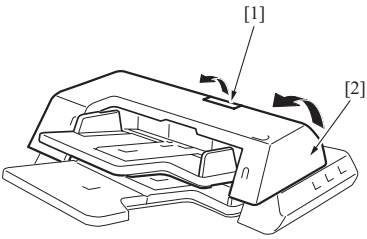

A07VF2C505DA

1. Pull the release lever [1] and open the upper door [2].

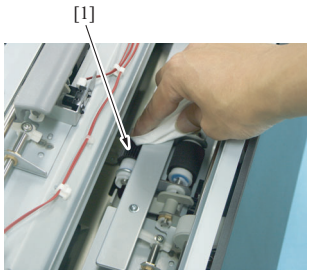

A07VF2C521DA

2. Using a cleaning pad dampened with alcohol, wipe the pick-up roller /Lw [1] clean of dirt.

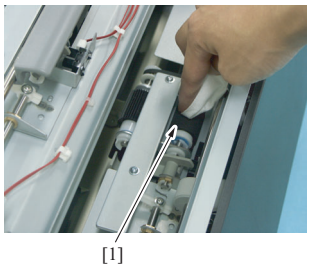

A07VF2C522DA

3. Using a cleaning pad dampened with alcohol, wipe the feed roller /Lw [1] clean of dirt.

4. Remove the separation roller assy /Lw. See P.6

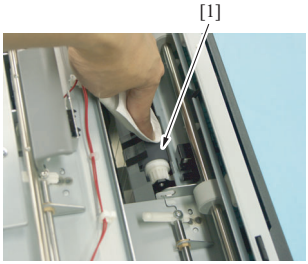

A07VF2C523DA

5. Using a cleaning pad dampened with alcohol, wipe the separation roller / Lw [1] clean of dirt.

3.5.3 Transport roller /Up

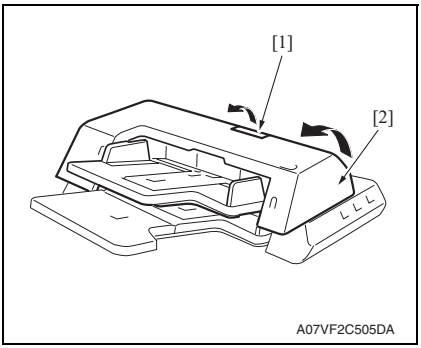

1. Pull the release lever [1] and open the upper door [2].

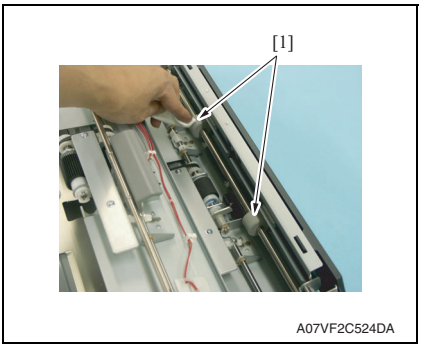

2. Using a cleaning pad dampened with alcohol, wipe the transport roller /Up [1] clean of dirt.

3.5.4 Transport roller /Lw

1. Remove the post inserter.
See P.11

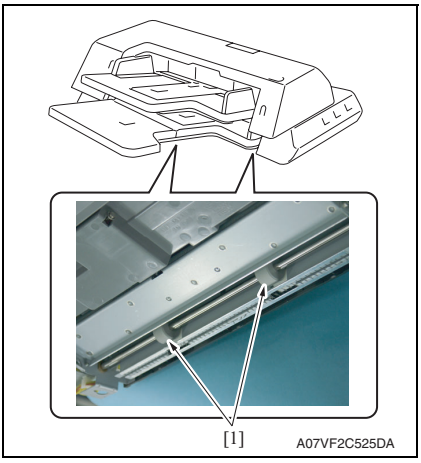

2. Using a cleaning pad dampened with alcohol, wipe the transport roller /Lw [1] clean of dirt.

ADJUSTMENT/SETTING

4. HOW TO USE THE ADJUSTMENT SECTION

- "Adjustment/Setting" contains detailed information on the adjustment items and procedures for this machine.
- Throughout this "Adjustment/Setting," the default settings are indicated by " ".

Advance checks

- Before attempting to solve the customer problem, the following advance checks must be made. Check to see if:

- The power supply voltage meets the specifications.
- The power supply is properly grounded.
- The machine shares the power supply with any other machine that draws large current intermittently (e.g., elevator and air conditioner that generate electric noise).
- The installation site is environmentally appropriate: high temperature, high humidity, direct sunlight, ventilation, etc.; levelness of the installation site.
- The original has a problem that may cause a defective image.
- The density is properly selected.
- The original glass, slit glass, or related part is dirty.
- Correct paper is being used for printing.
- The units, parts, and supplies used for printing (developer, PC drum, etc.) are properly replenished and replaced when they reach the end of their useful service life.
- Toner is not running out.

⚠ CAUTION

- **To unplug the power cord of the machine before starting the service job procedures.**
- **If it is unavoidably necessary to service the machine with its power turned ON, use utmost care not to be caught in the scanner cables or gears of the exposure unit.**
- **Special care should be used when handling the fusing unit which can be extremely hot.**
- **The developing unit has a strong magnetic field. Keep watches and measuring instruments away from it.**
- **Take care not to damage the PC drum with a tool or similar device.**
- **Do not touch IC pins with bare hands.**

5. MECHANICAL ADJUSTMENT

5.1 PI displacement adjustment (with PK-516 installed)

- Conduct this adjustment when the punch position is displaced when feeding from PI.

NOTE

- **Punch hole deviation correction must be completed before making this adjustment.**
  See P.12 of the PK-516 service manual.
- **Centering adjustment of the tray 1/2/3/4 must be completed before making this adjustment.**
  See P.649 of the main body service manual.
  See P.650 of the main body service manual.
- **In the PI displacement adjustment, adjust the tray /Up, and then adjust the tray /Lw.**

1. Set three sheets of paper in the tray of the PI, and then feed them in the punch mode as samples.
2. Fold the sheets in half at the center and check the misalignment of the punch holes.

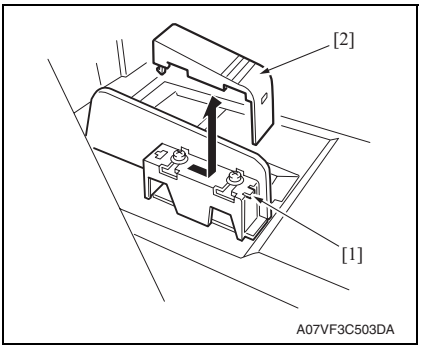

<In the upper tray case>

3. Release the hook [1], and remove the adjustment cover [2].

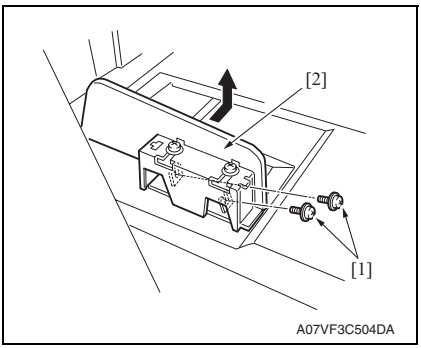

<In the lower tray case>

3. Remove the adjustment cover in the same way as the upper tray case. Remove two screws [1], slide the side guide plate /Rr [2] to the front, and remove it.

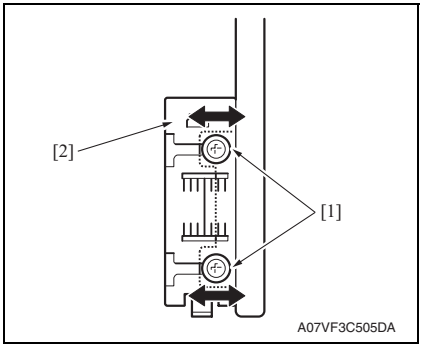

4. Loosen two adjustment screws [1] on the side guide plate /Rr [2] and slide the side guide plate /Rr twice as long as the misalignment of the punch hole position (for example, if the misalignment is 1.5 mm to the rear, slide 3 mm to the rear).
   1 index: 2 mm
5. Fully tighten the adjustment screws to secure the side guide plate /Rr.
6. For the tray /Lw, reinstall the side guide plate /Rr with two screws.
7. Repeat step 1 to 6 until the misalignment of the punch holes is corrected.
8. Reinstall the adjustment cover.
9. In the service mode, perform [Post Inserter Adjustment.].
   See P.608 of the main body service manual.

5.2 PI tilt adjustment (with PK-516 installed)

- Conduct this adjustment if the edge of the paper and the punch hole position of the paper fed from PI is not in parallel.

1. Set three sheets of paper in the tray of the PI, and then feed them in the punch mode as samples.

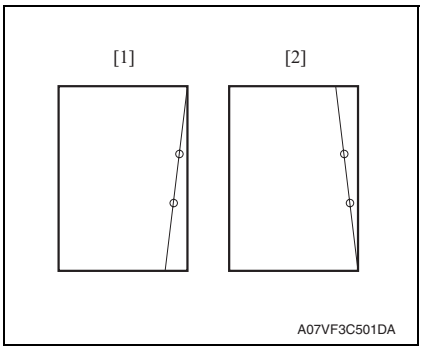

2. Fold the sheets in half and check the tilt of the punch holes.
[1]: The front is wider
[2]: The back is wider

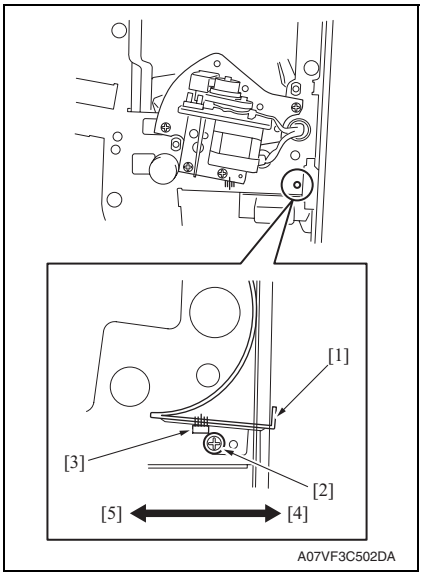

3. Open the front door of finisher, and then loosen the screw [2] of the guide plate [1].
4. Adjust the guide plate [1] in accordance with the misalignment of the punch holes by referring to the mark [3].
The back is wider: Move to [4]
The front is wider: Move to [5]
5. Tighten the screw [2].

6. Repeat step 1 to 5 until the tilt of the punch holes is corrected.

KONICA MINOLTA

SERVICE MANUAL

FIELD SERVICE

FS-527

2009.07

KONICA MINOLTA BUSINESS TECHNOLOGIES, INC. Ver. 1.0

Revision history

After publication of this service manual, the parts and mechanism may be subject to change for improvement of their performance.
Therefore, the descriptions given in this service manual may not coincide with the actual machine.

When any change has been made to the descriptions in the service manual, a revised version will be issued with a revision mark added as required.

Revision mark:

- To indicate clearly a section revised, is shown at the left margin of the revised section.
  The number inside represents the number of times the revision has been made.

- To indicate clearly a page that contains the revision, is shown near the page number of the corresponding page.
  The number inside represents the number of times the revision has been made.

NOTE

Revision marks shown in a page are restricted only to the latest ones with the old ones deleted.

- When a page revised in Ver. 2.0 has been changed in Ver. 3.0:
  The revision marks for Ver. 3.0 only are shown with those for Ver. 2.0 deleted.
- When a page revised in Ver. 2.0 has not been changed in Ver. 3.0:
  The revision marks for Ver. 2.0 are left as they are.

Date	Service manual Ver.	Revision mark	Descriptions of revision
2009/07	1.0	—	Issue of the first edition

CONTENTS

FS-527

OUTLINE

1. PRODUCT SPECIFICATIONS 1

MAINTENANCE

2. PERIODICAL MAINTENANCE PROCEDURE 5
2.1 Paper exit section 5
2.1.1 Cleaning procedure for each parts 5
2.1.2 Replacing the upper paddles 6
2.1.3 Replacing the lower paddles 7
3. OTHER MAINTENANCE ITEM 9
3.1 Items not allowed to be disassembled and adjusted 9
3.2 Disassembly/reassembly parts list 10
3.3 Disassembly/reassembly procedure 11
3.3.1 Upper cover 11
3.3.2 Rear cover 11
3.3.3 Front door 12
3.3.4 Front upper cover 12
3.3.5 Front lower cover 13
3.3.6 Finisher 14
3.3.7 Horizontal transport unit 15
3.3.8 Stapler unit 16
3.3.9 FS control board (FSCB) 17
3.3.10 Paper passage motor/1 (M1) 18
3.3.11 Duplex path switching motor (M2) 19
3.3.12 Exit motor (M5) 20
3.3.13 Paper passage motor/2 (M3) 22
3.3.14 Conveyance motor (M4) 23
3.3.15 Upper lower path switching motor (M6) 25
3.3.16 Tray1 path switching motor (M8) 25
3.3.17 Exit roller retraction motor (M9) 26
3.3.18 Accommodation roller retraction motor (M10) 27
3.3.19 Stapler movement motor (M11) 27
3.3.20 Accommodation paddle motor (M12) 28

3.3.21 Elevate motor (M15) 29
3.3.22 Tray2 shift motor (M16) 30
3.3.23 Accommodation paddle solenoid (SD1) 31

OUTLINE

1. PRODUCT SPECIFICATIONS

A. Type

Name	Multi staple finisher
Type	Freestanding
Document alignment	Center
Consumables	Staples

B. Functions

Modes	Sort, group, offset, group offset, sort staple

C. Paper type

(1) Non sort/sort/group

Type	Size	Weight	Max. capacity		
Plain paper Recycled paper	A6S, A5S/A5, B5S/B5, B6S, A4S/A4, B4, A3, A3Wide 5 1/2 x 8 1/2S/5 1/2 x 8 1/2, 8 1/2 x 11S/8 1/2 x 11, 8 1/2 x 14, 11 x 17, 12 1/4 x 18	64 to 90 g/m² 17 to 24 lb	Exit tray1	200 sheets	
			Exit tray2	A4S, 8 1/2 x 11S or less	3,000 sheets
				B4, 8 1/2 x 14 or greater	1,500 sheets
				A5S, 5 1/2 x 8 1/2S or less	500 sheets
Envelope	Tray1 (Sub tray) Max. 311.15 mm x 1200 mm 12.25 x 47.24 inch Min. 90 mm x 139.7 mm 3.54 x 5.5 inch Tray2 (Main tray) Max. 311.15 mm x 457.2 mm 12.25 x 18 inch Min. 100 mm x 139.7 mm 3.94 x 5.5 inch	—	20 sheets		
OHP transparencies		—			
Label		—			
Letterhead		—			
Thick paper 1		91 to 120 g/m² 24.25 to 31.9 lb			
Thick paper 1+		121 to 157 g/m² 32 to 41.75 lb			
Thick paper 2		158 to 209 g/m² 42 to 55.5 lb			
Thick paper 3		210 to 256 g/m² 55.75 to 68 lb			
Thick paper 4		257 to 300 g/m² 68.25 to 79.8 lb			
Long size paper *	210 mm to 297 mm x 457.2 mm to 1200 mm	127 to 160 g/m² 33.75 to 42.5 lb	—		

*: Long size paper is available only for non-sort mode.

(2) Sort offset/group offset

Type	Size	Weight	Max. capacity		
Plain paper Recycled paper	A5, B5S/B5, A4S/A4, B4, A3, A3Wide 8 1/2 x 11S/8 1/2 x 11, 8 1/2 x 14, 11 x 17, 12 1/4 x 18 Max. 311.15 mm x 457.2 mm 12.25 x 18 inch Min. 182 mm x 148.5 mm 7.17 x 5.85 inch	64 to 90 g/m² 17 to 24 lb	Exit tray2	A4S, 8 1/2 x 11S or less	3,000 sheets *
				B4, 8 1/2 x 14 or greater	1,500 sheets
				A5	500 sheets
Thick paper		91 to 271 g/m² 24.25 to 72 lb	—		

*: 2,000 sheets when SD-509 is mounted

(3) Sort staple

Type	Size	Weight	No. of sheets to be stapled		Max. capacity		Max. No. of sheets to be stapled
					A4S, 8-1/2 X 11S or less	B4, 8-1/2 X 14 or greater	
Plain paper Recycled paper	A5, B5S/B5, A4S/A4, B4, A3 8 1/2 x 11S/8 1/2 x 11, 8 1/2 x 14, 11 x 17 Max. 297 mm x 431.8 mm 11.75 x 17 inch Min. 182 mm x 148.5 mm 7.25 x 5.75 inch	64 to 90 g/m² 17 to 24 lb	Exit tray2	2 to 9 sheets	100 copies	50 copies	50 sheets
				10 to 20 sheets	50 copies	50 copies	
				21 to 30 sheets	30 copies	30 copies	
				31 to 40 sheets	25 copies	25 copies	
				41 to 50 sheets	20 copies	20 copies	
Thick paper		91 to 209 g/m² 24.25 to 55.5 lb	—				30 sheets
			—				15 sheets

D. Stapling

Staple filling mode	Dedicated staple cartridge (5000 staples)	
Stapling position	Back/Front of the corner (45 degree)	A4, A3 8 1/2 x 11, 11 x 17
	Back/Front of the corner (35 degree)	B5, B4
	Back/Front of the corner (Parallel)	A4S, B5S, A5 8 1/2 x 11S, 8 1/2 x 14
	Side: Parallel 2 point	A4S/A4, A3, B5S/B5, B4, A5 8 1/2 x 11S/8 1/2 x 11, 8 1/2 x 14, 11 x 17
Manual staple	None	

E. Machine specifications

Power requirements	DC 24 V ± 10 % (supplied from the main body)
Max. power consumption	56 W or less
Dimensions	528 (W) x 641 (D) x 1,025 (H) mm 20.79 (W) x 25.24 (D) x 40.35 (H) inch 658 (W) x 641 (D) x 1,087 (H) mm * 25.91 (W) x 25.24 (D) x 42.8 (H) inch *
Weight	42 kg (92.59 lb)

*: Size when the paper output tray is pulled out

F. Operating environment

- Conforms to the operating environment of the main body.

Blank Page

MAINTENANCE

2. PERIODICAL MAINTENANCE PROCEDURE

2.1 Paper exit section

NOTE

- **The alcohol described in the cleaning procedure of maintenance represents the isopropyl alcohol.**

2.1.1 Cleaning procedure for each parts

A. Periodically cleaning parts/cycle

- Each rollers/Each rolls: Every 300,000 counts
- Paddle: Every 300,000 counts

B. Cleaning point

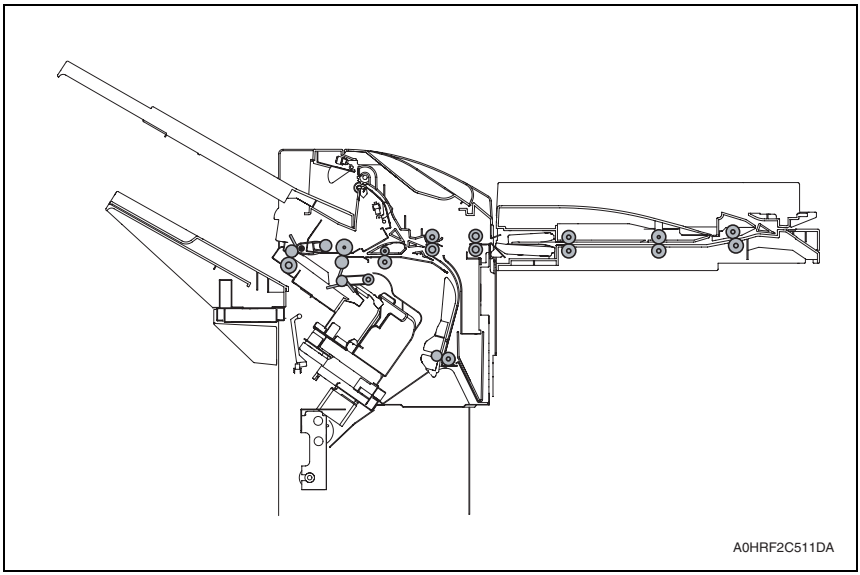

2.1.2 Replacing the upper paddles

A. Periodically cleaning parts/cycle

- Upper paddles: Every 800,000 counts

B. Procedure

1. Open the front door of the finisher.

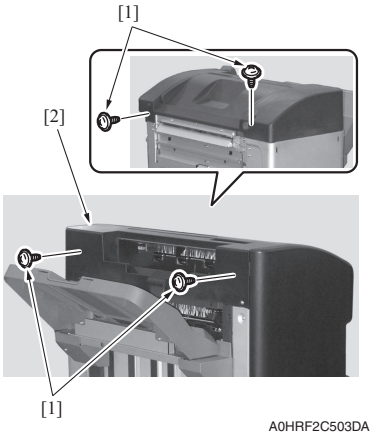

2. Remove four screws [1], and remove the upper cover [2].

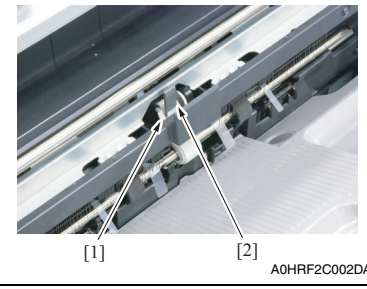

3. Remove the C-clip [1], and remove the upper paddle assy [2].

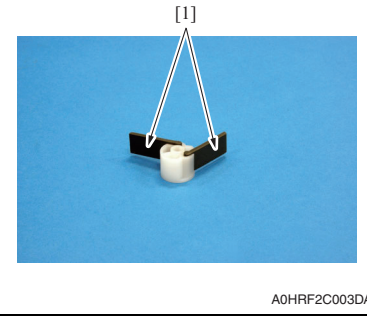

4. Remove two paddles [1].

NOTE

- **When installing the paddles, use alcohol to moisten the surface of the paddles that are inserted into the grooves.**

5. Reinstall the above parts following the removal steps in reverse.

2.1.3 Replacing the lower paddles

A. Periodically cleaning parts/cycle

- Lower paddles: Every 800,000 counts

B. Procedure

1. Remove the finisher.
See P.14
2. Open the front door of the finisher.

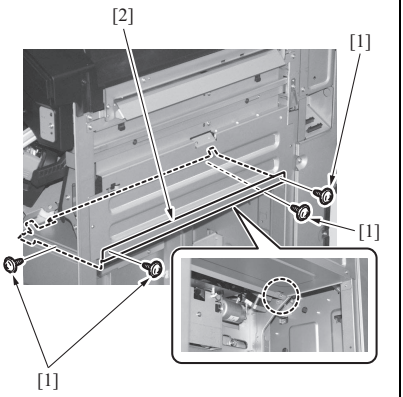

NOTE

- **In case SD-509 is not mounted, remove the four screws [1] and take out the plate [2].**

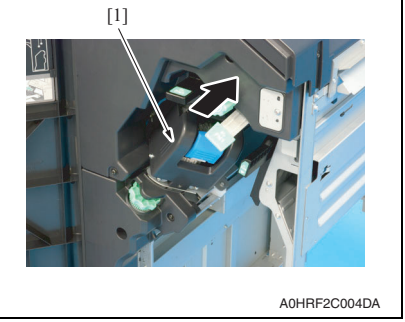

3. Slide the stapler unit [1] backward.

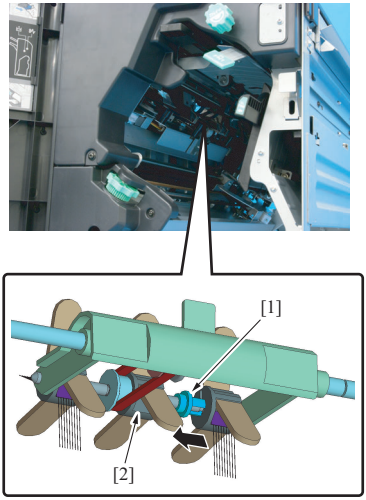

A0HRF2C505DA

4. Move the stopper [1] forward, and release the lock.
5. Remove the lower paddle assy [2].

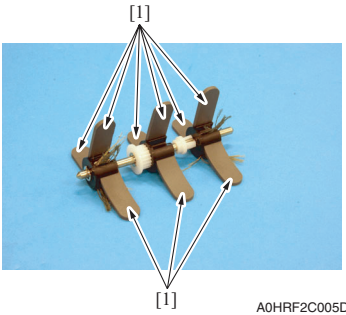

A0HRF2C005DA

6. Remove nine paddles [1].

NOTE

- **When installing the paddles, use alcohol to moisten the surface of the paddles that are inserted into the grooves.**

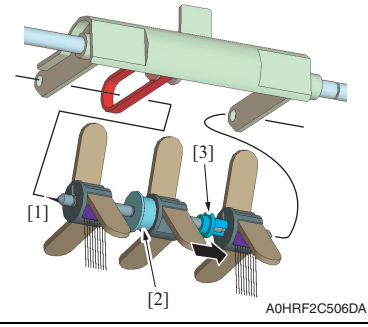

A0HRF2C506DA

7. Put the front side of the lower paddle Assy [1] through the belt.
8. Attach the lower paddle Assy to the arm and put the belt on the gear [2].
9. Move the stopper [3] to secure.

10. Reinstall the above parts following the removal steps in reverse.

3. OTHER MAINTENANCE ITEM

3.1 Items not allowed to be disassembled and adjusted

A. Paint-locked screws

NOTE

- **To prevent loose screws, a screw lock in blue or green series color is applied to the screws.**
- **The screw lock is applied to the screws that may get loose due to the vibrations and loads created by the use of machine or due to the vibrations created during transportation.**
- **If the screw lock coated screws are loosened or removed, be sure to apply a screw lock after the screws are tightened.**

B. Red-painted screws

NOTE

- **The screws which are difficult to be adjusted in the field are painted in red in order to prevent them from being removed by mistake.**
- **Do not remove or loosen any of the red-painted screws in the field. It should also be noted that, when two or more screws are used for a single part, only one representative screw may be marked with the red paint.**

C. Variable resistors on board

NOTE

- **Do not turn the variable resistors on boards for which no adjusting instructions are given in Adjustment/Setting.**

D. Removal of PWBs

⚠ CAUTION

- **When removing a circuit board or other electrical component, refer to "Handling of PWBs" and follow the corresponding removal procedures.**
- **The removal procedures given in the following omit the removal of connectors and screws securing the circuit board support or circuit board.**
- **Where it is absolutely necessary to touch the ICs and other electrical components on the board, be sure to ground your body.**

3.2 Disassembly/reassembly parts list

Section	Part name	Ref. page
Exterior parts	Upper cover	P.11
	Rear cover	P.11
	Front door	P.12
	Front upper cover	P.12
	Front lower cover	P.13
Unit	Finisher	P.14
	Horizontal transport unit	P.15
	Stapler unit	P.16
Other	FS control board (FSCB)	P.17
	Paper passage motor/1 (M1)	P.18
	Duplex path switching motor (M2)	P.19
	Paper passage motor/2 (M3)	P.22
	Conveyance motor (M4)	P.23
	Exit motor (M5)	P.20
	Upper lower path switching motor (M6)	P.25
	Tray1 path switching motor (M8)	P.25
	Exit roller retraction motor (M9)	P.26
	Accommodation roller retraction motor (M10)	P.27
	Stapler movement motor (M11)	P.27
	Accommodation paddle motor (M12)	P.28
	Elevate motor (M15)	P.29
	Tray2 shift motor (M16)	P.30
	Accommodation paddle solenoid (SD1)	P.31

3.3 Disassembly/reassembly procedure

3.3.1 Upper cover

1. Open the front door.

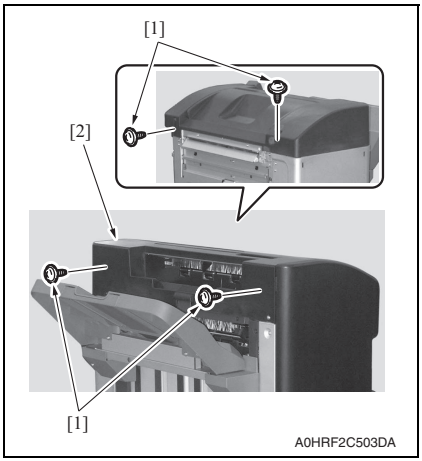

2. Remove four screws [1], and remove the upper cover [2].

3. Reinstall the above parts following the removal steps in reverse.

3.3.2 Rear cover

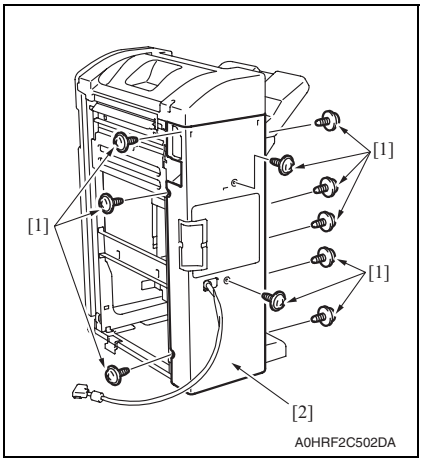

1. Remove ten screws [1], and remove the rear cover [2].

2. Reinstall the above parts following the removal steps in reverse.

3.3.3 Front door

1. Remove the screw [1] and the plate [2].

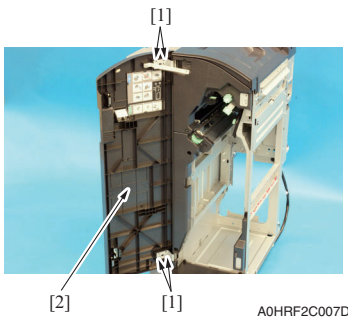

2. Remove four screws [1], and remove the front door [2].

3. Reinstall the above parts following the removal steps in reverse.

3.3.4 Front upper cover

1. Remove the front door.
See P.12

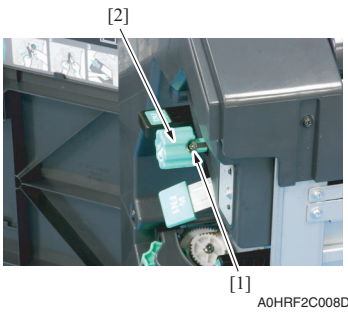

2. Loosen the screw [1], and remove the dial (F2) [2].

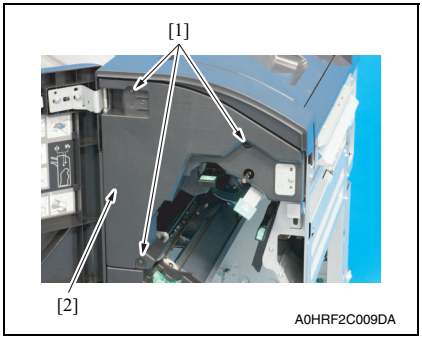

3. Remove three screws [1], and remove the front upper cover [2].

4. Reinstall the above parts following the removal steps in reverse.

3.3.5 Front lower cover

1. Remove the front door.
See P.12
2. Remove the front upper cover.
See P.12

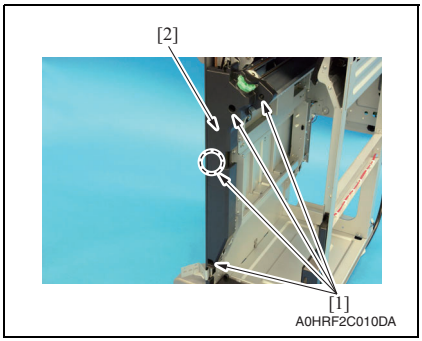

3. Remove four screws [1], and remove the front lower cover [2].

4. Reinstall the above parts following the removal steps in reverse.

3.3.6 Finisher

1. Open the front door.

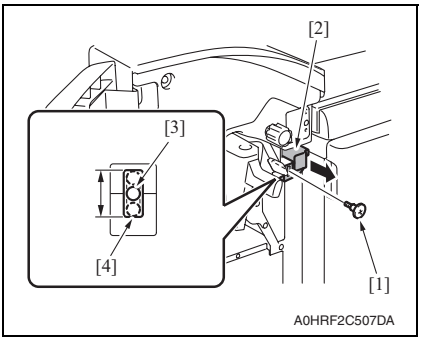

2. Remove the screw [1], and pull out the lever [2].

NOTE

- **At the time of the finisher installation, make sure that the screw hole [3] locates within the scope of the mounting hole of the lever [4].**

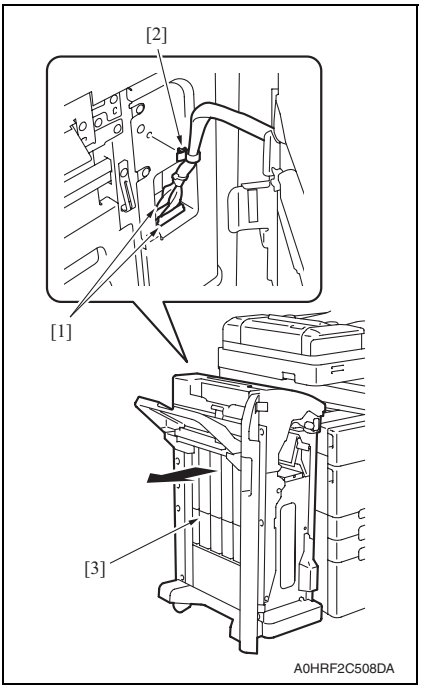

3. Disconnect two connectors [1].
4. Remove the cord clamp [2].
5. Remove the finisher [3] from the main body.

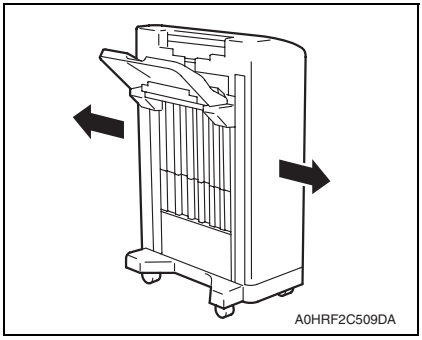

⚠ CAUTION

- **When transporting the finisher, make sure to push it to the direction as shown in the illustration. (to prevent turnover during transportation).**

6. Reinstall the above parts following the removal steps in reverse.

3.3.7 Horizontal transport unit

1. Remove the finisher from the main body.
See P.14

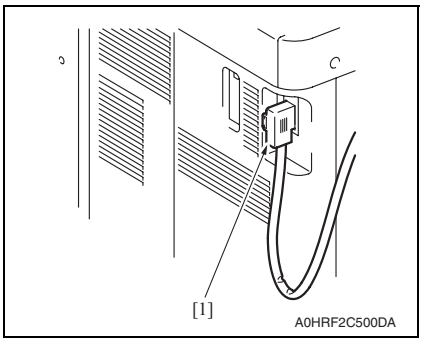

2. Remove the relay connector [1].

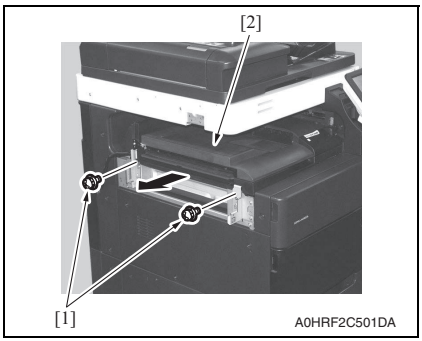

3. Remove two screws [1], and remove the horizontal transport unit [2].

4. Reinstall the above parts following the removal steps in reverse.

3.3.8 Stapler unit

1. Open the front door.

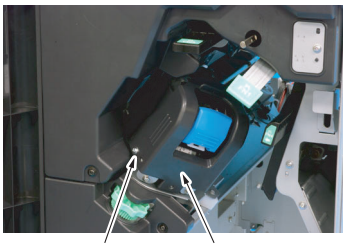

A0HRF2C011DA

2. Remove the screw [1], and remove the stapler unit cover [2].

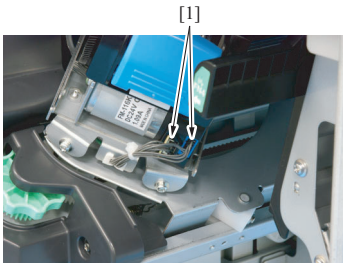

A0HRF2C012DA

3. Disconnect two connectors [1].

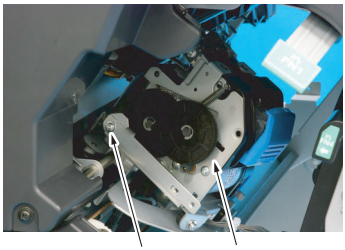

A0HRF2C013DA

4. Remove the screw [1], and remove the stapler unit [2].

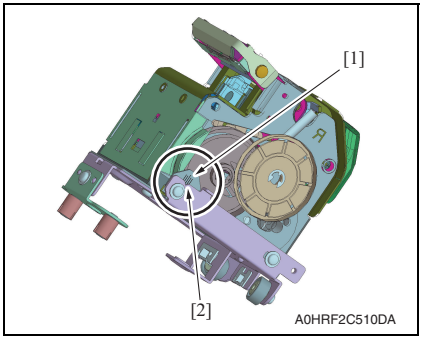

NOTE

- **When installing the staple unit, make sure to adjust the mark-off line [1] with the notch [2].**

5. Reinstall the above parts following the removal steps in reverse.

3.3.9 FS control board (FSCB)

1. Remove the finisher from the main body.
See P.14

2. Remove the rear cover.
See P.11

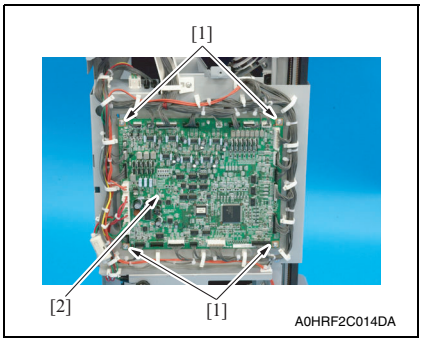

3. Remove all connectors from the FS control board.

4. Remove four screws [1], and remove the FS control board [2].

5. Reinstall the above parts following the removal steps in reverse.

3.3.10 Paper passage motor/1 (M1)

1. Remove the finisher from the main body.
See P.14
2. Remove the horizontal transport unit.
See P.15

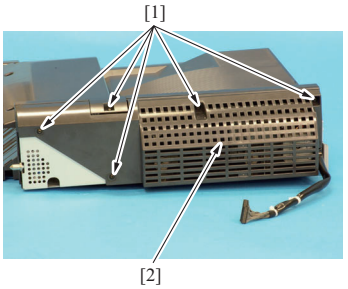

3. Remove five screws [1], and remove the rear cover [2] of the horizontal transport unit.

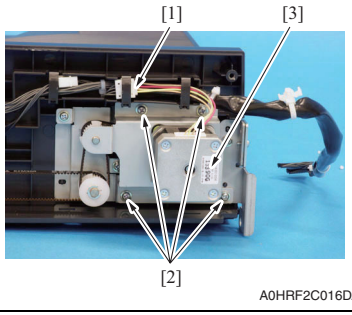

4. Disconnect the connector [1].
5. Remove four screws [2], and remove the paper passage motor assy [3].

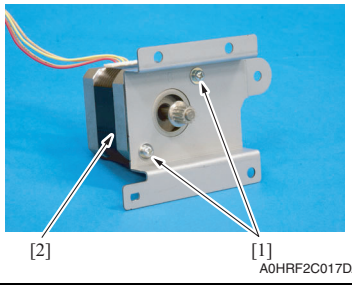

6. Remove two screws [1], and remove the paper passage motor/1 [2].

7. Reinstall the above parts following the removal steps in reverse.

3.3.11 Duplex path switching motor (M2)

1. Remove the finisher from the main body.
See P.14

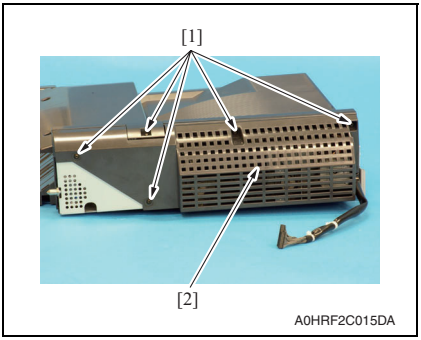

2. Remove five screws [1], and remove the rear cover [2] of the horizontal transport unit.

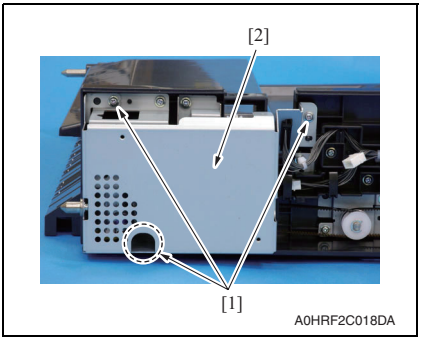

3. Remove three screws [1], and remove the plate [2].

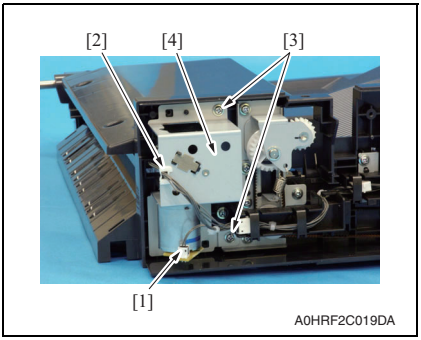

4. Disconnect the connector [1].
5. Remove the harness from the edge cover [2].
6. Remove two screws [3], and remove the duplex path switching motor assy [4].

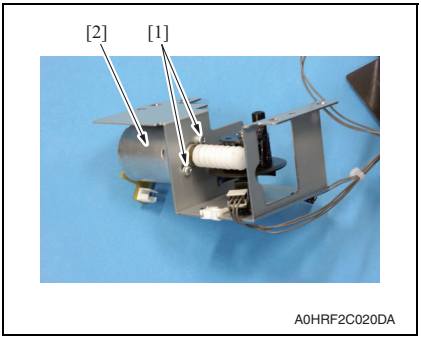

7. Remove two screws [1], and remove the duplex path switching motor [2].

8. Reinstall the above parts following the removal steps in reverse.

3.3.12 Exit motor (M5)

1. Remove the finisher from the main body.
See P.14
2. Remove the upper cover.
See P.11
3. Remove the rear cover.
See P.11
4. Remove the accommodation paddle motor.
See P.28

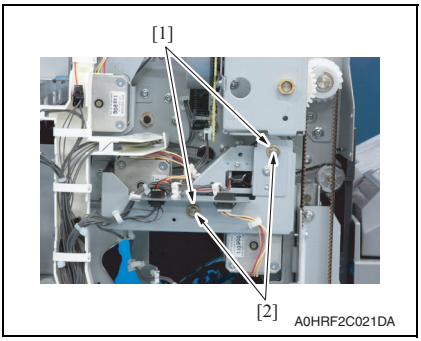

5. Remove two E-rings [1] and two bushings [2].

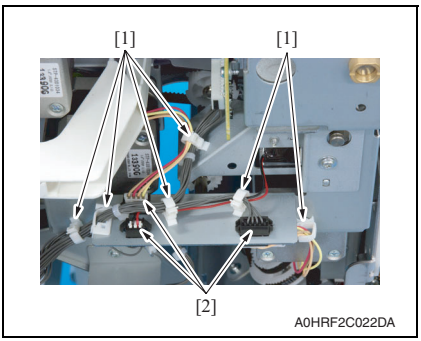

6. Remove the harness from six wire saddles [1].
7. Disconnect three connectors [2].

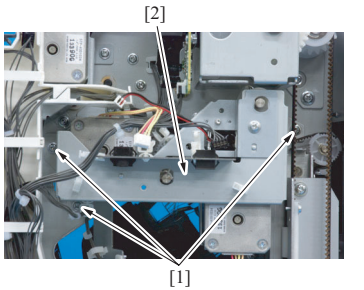

A0HRF2C023DA

8. Remove three screws [1], and remove the plate [2].

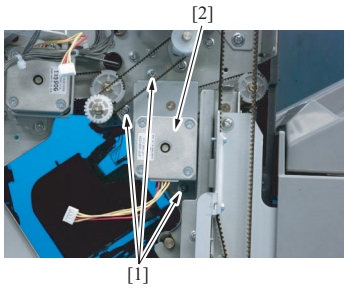

A0HRF2C024DA

9. Remove three screws [1], and remove the exit motor assy [2].

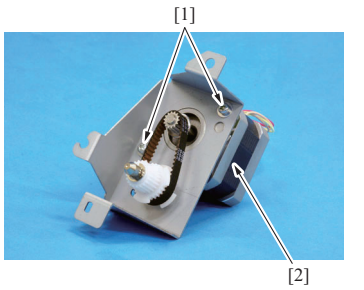

A0HRF2C025DA

10. Remove two screws [1], and remove the exit motor [2].

11. Reinstall the above parts following the removal steps in reverse.

3.3.13 Paper passage motor/2 (M3)

1. Remove the finisher from the main body.
See P.14
2. Remove the upper cover.
See P.11
3. Remove the rear cover.
See P.11

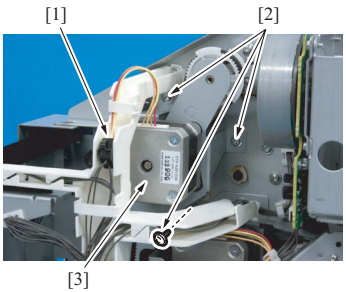

A0HRF2C026DA

4. Disconnect the connector [1].
5. Remove three screws [2], and remove the paper passage motor/2 assy [3].

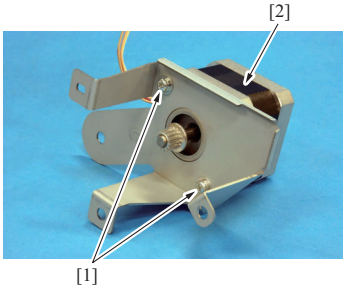

A0HRF2C027DA

6. Remove two screws [1], and remove the paper passage motor/2 [2].

7. Reinstall the above parts following the removal steps in reverse.

3.3.14 Conveyance motor (M4)

1. Remove the finisher from the main body.
See P.14
2. Remove the upper cover.
See P.11
3. Remove the rear cover.
See P.11
4. Remove the accommodation paddle motor.
See P.28

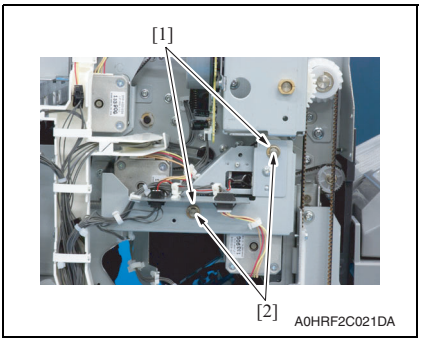

5. Remove two E-rings [1] and two bushings [2].

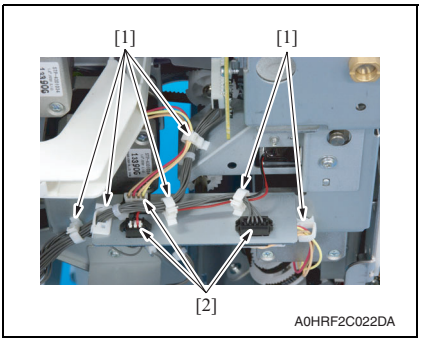

6. Remove the harness from six wire saddles [1].
7. Disconnect three connectors [2].

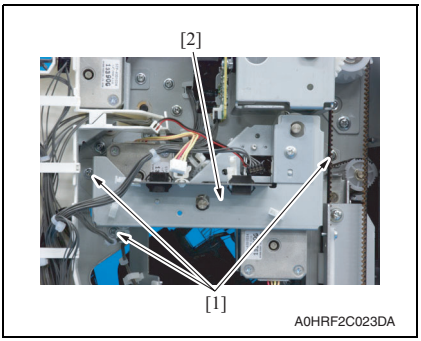

8. Remove three screws [1], and remove the plate [2].

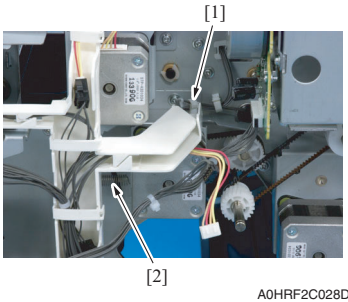

A0HRF2C028DA

9. Remove the harness from the wire saddles [1].
10. Remove two springs [2].

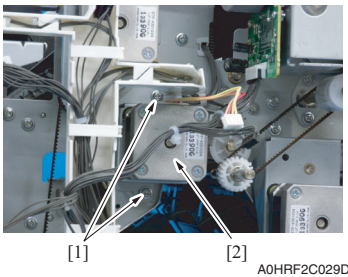

A0HRF2C029DA

11. Remove two screws [1], and remove the conveyance motor assy [2].

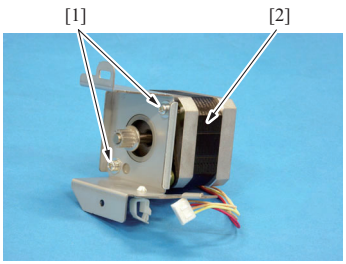

A0HRF2C030DA

12. Remove two screws [1], and remove the conveyance motor [2].

13. Reinstall the above parts following the removal steps in reverse.

3.3.15 Upper lower path switching motor (M6)

1. Remove the upper cover.
See P.11
2. Remove the front upper cover.
See P.12

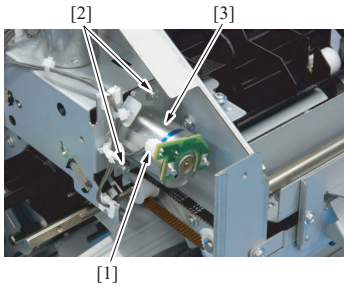

3. Disconnect the connector [1].
4. Remove two screws [2], and remove the upper lower path switching motor [3].

5. Reinstall the above parts following the removal steps in reverse.

3.3.16 Tray1 path switching motor (M8)

1. Remove the upper cover.
See P.11
2. Remove the front upper cover.
See P.12

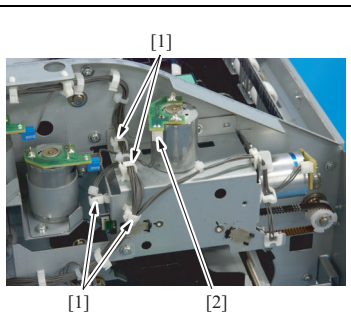

3. Remove the harness from four wire saddles [1].
4. Disconnect the connector [2].

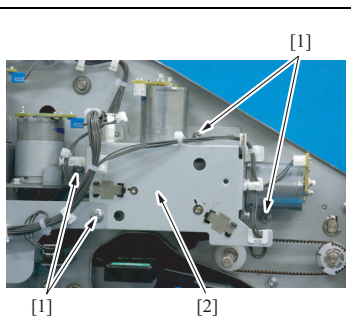

5. Remove four screws [1], and remove the tray1 path switching motor assy [2].

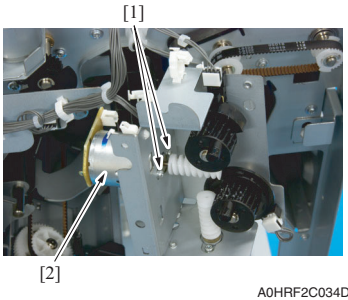

6. Remove two screws [1], and remove the tray1 path switching motor [2].

7. Reinstall the above parts following the removal steps in reverse.

3.3.17 Exit roller retraction motor (M9)

1. Remove the upper cover.
See P.11
2. Remove the front upper cover.
See P.12

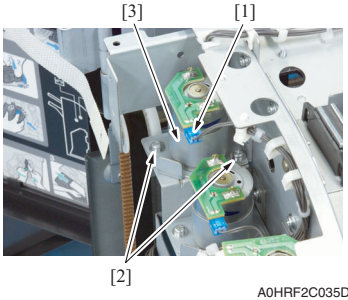

3. Disconnect the connector [1].
4. Remove two screws [1], and remove the exit roller retraction motor [2].

5. Reinstall the above parts following the removal steps in reverse.

3.3.18 Accommodation roller retraction motor (M10)

1. Remove the upper cover.
See P.11
2. Remove the front upper cover.
See P.12

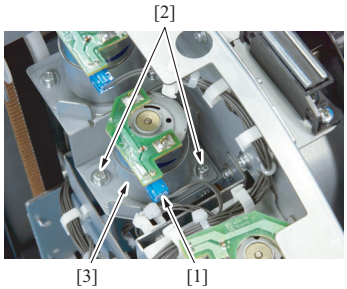

3. Disconnect the connector [1].
4. Remove two screws [2], and remove the accommodation roller retraction motor [3].
5. Reinstall the above parts following the removal steps in reverse.

3.3.19 Stapler movement motor (M11)

1. Remove the finisher from the main body.
See P.14
2. Remove the upper cover.
See P.11
3. Remove the rear cover.
See P.11

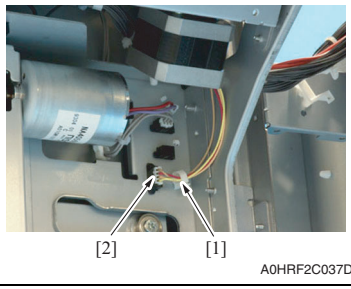

4. Remove the harness from four wire saddles [1].
5. Disconnect the connector [2].

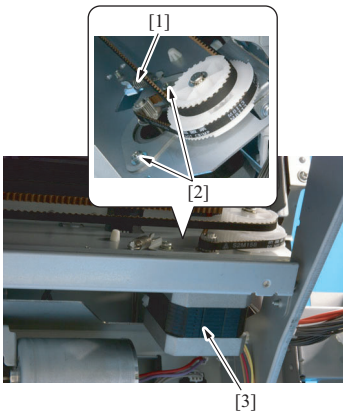

6. Remove the spring [1].
7. Remove two screws [2], and remove the stapler movement motor [3].

8. Reinstall the above parts following the removal steps in reverse.

3.3.20 Accommodation paddle motor (M12)

1. Remove the finisher from the main body.
See P.14
2. Remove the upper cover.
See P.11
3. Remove the rear cover.
See P.11

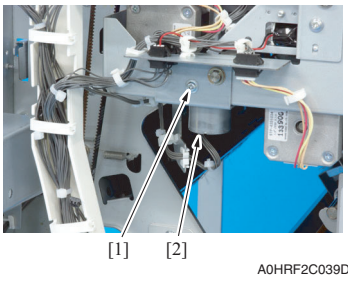

4. Remove the screw [1].
5. Disconnect the connector [2].

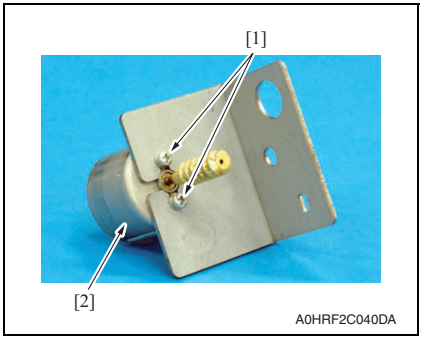

6. Remove two screws [1], and remove the accommodation paddle motor [2].

7. Reinstall the above parts following the removal steps in reverse.

3.3.21 Elevate motor (M15)

1. Remove the finisher from the main body.
See P.14
2. Remove the upper cover.
See P.11
3. Remove the rear cover.
See P.11

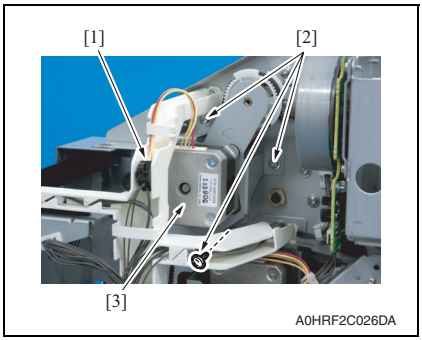

4. Disconnect the connector [1].
5. Remove three screws [2], and remove the elevate motor assy [3].

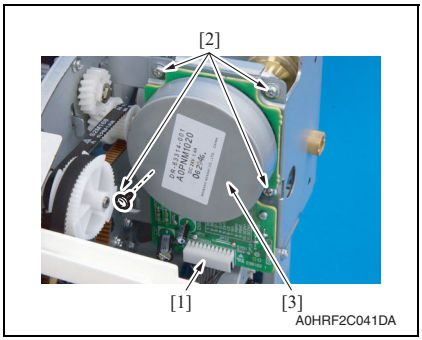

6. Disconnect the connector [1].
7. Remove four screws [2], and remove the elevate motor [3].

8. Reinstall the above parts following the removal steps in reverse.

3.3.22 Tray2 shift motor (M16)

1. Remove the finisher from the main body.
See P.14

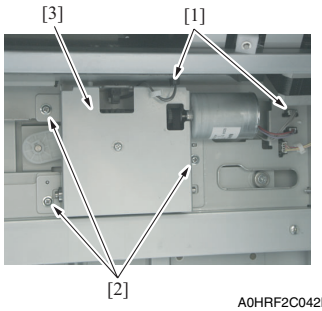

A0HRF2C042DA

2. Disconnect two connectors [1].
3. Remove three screws [2], and remove the tray2 shift motor assy [3].

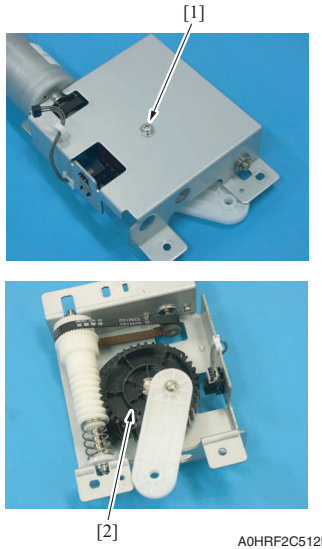

A0HRF2C512DA

4. Remove the screw [1], and remove the gear assy [2].

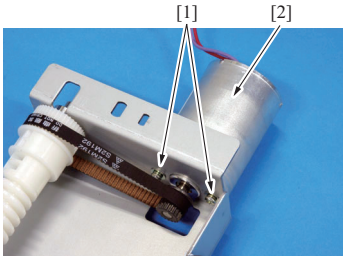

A0HRF2C043DA

5. Remove two screws [1], and remove the tray2 shift motor [2].
6. Reinstall the above parts following the removal steps in reverse.

3.3.23 Accommodation paddle solenoid (SD1)

1. Remove the finisher from the main body.
See P.14
2. Remove the upper cover.
See P.11
3. Remove the rear cover.
See P.11

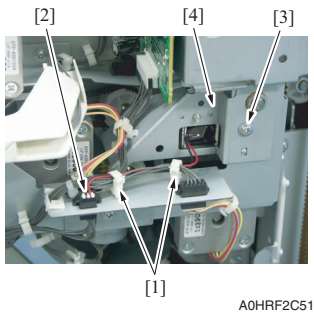

A0HRF2C513DA

4. Remove the harness from two wire saddles [1].
5. Disconnect the connector [2].
6. Remove three screws [3], and remove the plate [4].

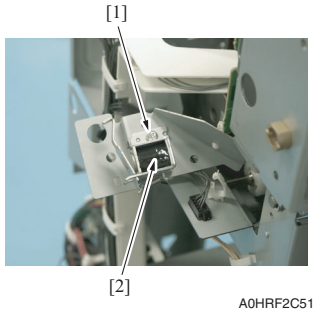

A0HRF2C514DA

7. Remove the screw [1], and remove the accommodation paddle solenoid [2].

8. Reinstall the above parts following the removal steps in reverse.

Blank Page

KONICA MINOLTA

SERVICE MANUAL

FIELD SERVICE

PK-517

2009.07

KONICA MINOLTA BUSINESS TECHNOLOGIES, INC. Ver. 1.0

Revision history

After publication of this service manual, the parts and mechanism may be subject to change for improvement of their performance.
Therefore, the descriptions given in this service manual may not coincide with the actual machine.

When any change has been made to the descriptions in the service manual, a revised version will be issued with a revision mark added as required.

Revision mark:

- To indicate clearly a section revised, is shown at the left margin of the revised section.
  The number inside represents the number of times the revision has been made.

- To indicate clearly a page that contains the revision, is shown near the page number of the corresponding page.
  The number inside represents the number of times the revision has been made.

NOTE

Revision marks shown in a page are restricted only to the latest ones with the old ones deleted.

- When a page revised in Ver. 2.0 has been changed in Ver. 3.0:
  The revision marks for Ver. 3.0 only are shown with those for Ver. 2.0 deleted.
- When a page revised in Ver. 2.0 has not been changed in Ver. 3.0:
  The revision marks for Ver. 2.0 are left as they are.

Date	Service manual Ver.	Revision mark	Descriptions of revision
2009/07	1.0	—	Issue of the first edition

CONTENTS

PK-517

OUTLINE

1. PRODUCT SPECIFICATIONS 1

MAINTENANCE

2. PERIODICAL MAINTENANCE PROCEDURE 3
3. OTHER MAINTENANCE ITEM 4
3.1 Items not allowed to be disassembled and adjusted 4
3.2 Disassembly/reassembly parts list 5
3.3 Disassembly/reassembly procedure 5
3.3.1 Punch kit 5

ADJUSTMENT/SETTING

4. HOW TO USE THE ADJUSTMENT SECTION 7
5. MECHANICAL ADJUSTMENT 8
5.1 Mechanical adjustment of the punch section 8
5.1.1 Punch hole deviation correction 8

Blank Page

OUTLINE

1. PRODUCT SPECIFICATIONS

A. Type

Name	Punch kit
Type	FS-integrated type punching operation device

B. Functions

Punching method	Stops and punches every paper
No. of holes	2-3 holes / 4 holes / Sweden 4 holes
Hole diameter/pitch	2 holes / ϕ 8.0 mm / 70 mm pitch - 3 holes / ϕ 8.0 mm / 108 mm pitch 4 holes / ϕ 6.5 mm / 80 mm pitch Sweden 4 holes / ϕ 6.5 mm / 70 mm, 21 mm pitch
Supported mode	Punch mode
Applicable post processing mode	Sort, group, staple

C. Paper type

Size	2 hole punch setting: 11 x 17, 8-$^1/_2$ x 14, 8-$^1/_2$ x 11/8-$^1/_2$ x 11S 3 hole punch setting: 11 x 17, 8-$^1/_2$ x 11 4 hole punch setting: A3, B4, A4, B5 Sweden 4 hole punch setting: A3, B4, A4/A4S, B5
Supported paper	Plain paper, bond paper, thick paper 1/1+/2/3 (Main unit specifications prioritized)
Weight	64 to 256 g/m^2
Punch prohibited paper	Label paper, tab paper, transparency film, 2nd base paper, holed paper, and the other paper that may interfere with the operation of the punch kit or the punch blade

D. Machine specifications

Dimensions	58 mm (W) x 470 mm (D) x 135 mm (H) 2.28 inch (W) x 18.50 inch (D) x 5.31 inch (H)
Weight	1.8 kg (3.97 lb)

E. Operating environment

- Conforms to the operating environment of the main body.

NOTE

- **These specifications are subject to change without notice.**

Blank Page

MAINTENANCE

2. PERIODICAL MAINTENANCE PROCEDURE

- Periodically replaced parts are not employed.

3. OTHER MAINTENANCE ITEM

3.1 Items not allowed to be disassembled and adjusted

A. Paint-locked screws

NOTE

- **To prevent loose screws, a screw lock in blue or green series color is applied to the screws.**
- **The screw lock is applied to the screws that may get loose due to the vibrations and loads created by the use of machine or due to the vibrations created during transportation.**
- **If the screw lock coated screws are loosened or removed, be sure to apply a screw lock after the screws are tightened.**

B. Red-painted screws

NOTE

- **The screws which are difficult to be adjusted in the field are painted in red in order to prevent them from being removed by mistake.**
- **Do not remove or loosen any of the red-painted screws in the field. It should also be noted that, when two or more screws are used for a single part, only one representative screw may be marked with the red paint.**

C. Variable resistors on board

NOTE

- **Do not turn the variable resistors on boards for which no adjusting instructions are given in Adjustment/Setting.**

D. Removal of PWBs

⚠ CAUTION

- **When removing a circuit board or other electrical component, refer to "Handling of PWBs" and follow the corresponding removal procedures.**
- **The removal procedures given in the following omit the removal of connectors and screws securing the circuit board support or circuit board.**
- **Where it is absolutely necessary to touch the ICs and other electrical components on the board, be sure to ground your body.**

3.2 Disassembly/reassembly parts list

Section	Part name	Ref. page
Unit	Punch kit	P.5

3.3 Disassembly/reassembly procedure

3.3.1 Punch kit

1. Remove the finisher from the main body.

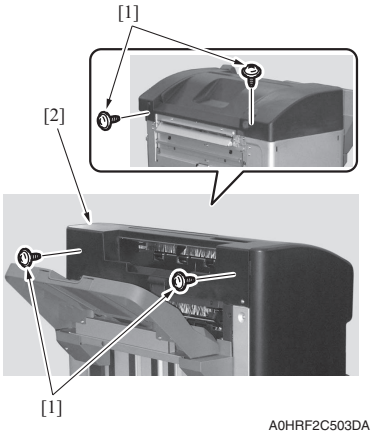

2. Remove four screws [1], and remove the finisher upper cover [2].

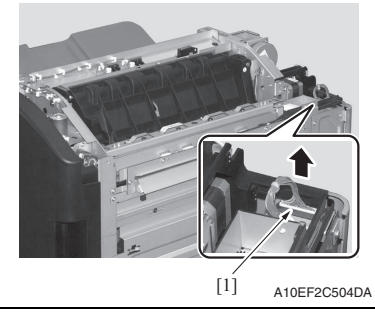

3. Disconnect the connector [1].

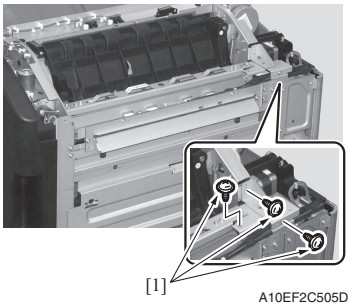

4. Remove three screws [1].

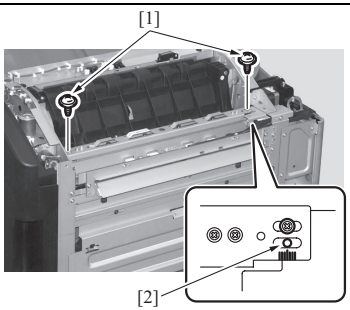

5. Remove two screws [1].

NOTE

- **At the time of installation, secure it by adjusting the plate dowel [2] to the center of the stamp mark.**

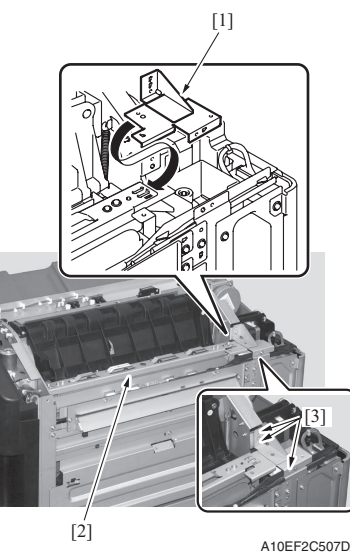

6. Remove the plate [1], and remove the punch kit [2].

NOTE

- **At the time of installation, align the position of the three dowel holes of the plate [3].**

7. Reinstall the above parts following the removal steps in reverse.

ADJUSTMENT/SETTING

4. HOW TO USE THE ADJUSTMENT SECTION

- "Adjustment/Setting" contains detailed information on the adjustment items and procedures for this machine.
- Throughout this "Adjustment/Setting," the default settings are indicated by " ".

Advance checks

Before attempting to solve the customer problem, the following advance checks must be made. Check to see if:

- The power supply voltage meets the specifications.
- The power supply is properly grounded.
- The machine shares the power supply with any other machine that draws large current intermittently (e.g., elevator and air conditioner that generate electric noise).
- The installation site is environmentally appropriate: high temperature, high humidity, direct sunlight, ventilation, etc.; levelness of the installation site.
- The original has a problem that may cause a defective image.
- The density is properly selected.
- The original glass, slit glass, or related part is dirty.
- Correct paper is being used for printing.
- The units, parts, and supplies used for printing (developer, PC drum, etc.) are properly replenished and replaced when they reach the end of their useful service life.
- Toner is not running out.

⚠ CAUTION

- **Be sure to unplug the power cord of the machine before starting the service job procedures.**
- **If it is unavoidably necessary to service the machine with its power turned ON, use utmost care not to be caught in the scanner cables or gears of the exposure unit.**
- **Special care should be used when handling the fusing unit which can be extremely hot.**
- **The developing unit has a strong magnetic field. Keep watches and measuring instruments away from it.**
- **Take care not to damage the PC drum with a tool or similar device.**
- **Do not touch IC pins with bare hands.**

5. MECHANICAL ADJUSTMENT

5.1 Mechanical adjustment of the punch section

5.1.1 Punch hole deviation correction

- **This adjustment must be made in the following case:**
  The punch holes are on a slanted line.

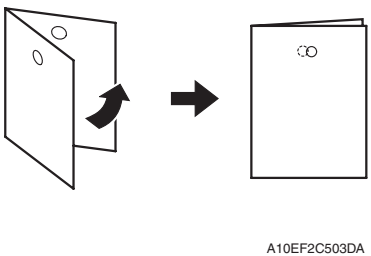

A10EF2C503DA

1. Set the mode to Punch mode for printing.
2. Hold the output paper half and check the displacement of the punch hole.
   Standard value: 0 ± 2.0 mm

3. In case the figure exceeds the above mentioned standard value, follow the procedures shown below.

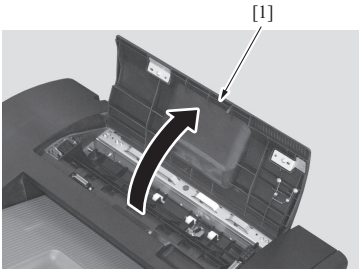

A10EF2C502DA

4. Open the upper cover [1].

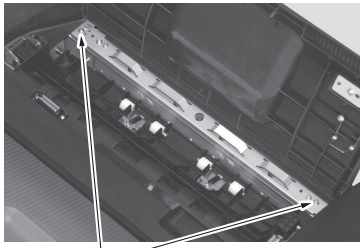

A10EF2C500DA

- Loosen two screws [1].

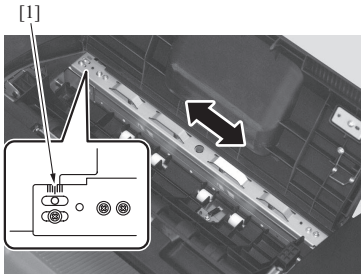

A10EF2C501DA

- Move the punch unit forward or backward for adjustment referring the mark-off line [1].

Blank Page

KONICA MINOLTA

SERVICE MANUAL

FIELD SERVICE

SD-509

2009.07

KONICA MINOLTA BUSINESS TECHNOLOGIES, INC. Ver. 1.0

Revision history

After publication of this service manual, the parts and mechanism may be subject to change for improvement of their performance.
Therefore, the descriptions given in this service manual may not coincide with the actual machine.

When any change has been made to the descriptions in the service manual, a revised version will be issued with a revision mark added as required.

Revision mark:

- To indicate clearly a section revised, is shown at the left margin of the revised section.
  The number inside represents the number of times the revision has been made.

- To indicate clearly a page that contains the revision, is shown near the page number of the corresponding page.
  The number inside represents the number of times the revision has been made.

NOTE

Revision marks shown in a page are restricted only to the latest ones with the old ones deleted.

- When a page revised in Ver. 2.0 has been changed in Ver. 3.0:
  The revision marks for Ver. 3.0 only are shown with those for Ver. 2.0 deleted.
- When a page revised in Ver. 2.0 has not been changed in Ver. 3.0:
  The revision marks for Ver. 2.0 are left as they are.

Date	Service manual Ver.	Revision mark	Descriptions of revision
2009/07	1.0	—	Issue of the first edition

CONTENTS

SD-509

OUTLINE

1. PRODUCT SPECIFICATIONS 1

MAINTENANCE

2. PERIODICAL MAINTENANCE PROCEDURE 3
3. OTHER MAINTENANCE ITEM 4
3.1 Items not allowed to be disassembled and adjusted 4
3.2 Disassembly/reassembly parts list 5
3.3 Disassembly/reassembly procedure 5
3.3.1 Front cover 5
3.3.2 Right cover 6
3.3.3 Staple unit cover 6
3.3.4 Saddle unit 7
3.3.5 Paper exit tray 10
3.3.6 Staple unit 11
3.3.7 SD drive board (SDDB) 12
3.3.8 Leading edge stopper motor (M20) 13
3.3.9 Upper paddle motor (M21) 14
3.3.10 Lower paddle motor (M22) 15
3.3.11 Center staple alignment motor/R (M23) 16
3.3.12 Center staple alignment motor/F (M24) 17
3.3.13 Center fold roller motor (M25) 18
3.3.14 Center fold plate motor (M26) 18
3.3.15 Leading edge grip solenoid (SD3) 19

ADJUSTMENT/SETTING

4. HOW TO USE THE ADJUSTMENT SECTION 21
5. MECHANICAL ADJUSTMENT 22
5.1 Mechanical adjustment of the paper exit section 22
5.1.1 Half-fold skew adjustment 22

Blank Page

OUTLINE

1. PRODUCT SPECIFICATIONS

A. Type

Name	Saddle sticher SD-509
Type	Built into the finisher
Installation	Screwed to the finisher
Document alignment	Center
Stapling function	Center parallel two points

B. Paper

(1) Saddle stitching

Type	Plain paper, Thick paper 1, Thick paper 2
Size	A3, B4, A4S, A3 Wide, 11 x 17, 8-$^1/_2$ x 14, 8-$^1/_2$ x 11S Min: 210 mm x 279.4 mm, 8.27 inch X 11 inch Max: 311.15 mm x 457.2 mm, 12.25 inch X 18 inch
Max. saddle stitching capacity	15 sheets (64 g/m^2 to 90 g/m^2 , 17 to 24 lb)
	14 sheets (64 g/m^2 to 90 g/m^2 , 17 to 24 lb) + 1 sheet (64 g/m^2 to 209 g/m^2 , 17 to 55.5 lb)

(2) Folding

Type	Plain paper
Size	A3, B4, A4S, A3 Wide, 11 x 17, 8-$^1/_2$ x 14, 8-$^1/_2$ x 11S Min: 210 mm x 279.4 mm, 8.27 inch X 11 inch Max: 311.15 mm x 457.2 mm, 12.25 inch X 18 inch
Max. number of sheets folded together	3 sheets (60 g/m^2 to 90 g/m^2 , 16 to 24 lb)

C. Machine specifications

Dimensions	239 mm (W) x 579 mm (D) x 534 mm (H) 9.41 inch (W) x 22.80 inch (D) x 21.02 inch (H)
Weight	24 kg (52.91 lb)

D. Operating environment

- Conforms to the operating environment of the main body.

E. Consumables

- Staples 5000 (SK-602: Staple kit)

NOTE

- **These specifications are subject to change without notice.**

Blank Page

MAINTENANCE

2. PERIODICAL MAINTENANCE PROCEDURE

- Periodically replaced parts are not employed.

3. OTHER MAINTENANCE ITEM

3.1 Items not allowed to be disassembled and adjusted

A. Paint-locked screws

NOTE

- **To prevent loose screws, a screw lock in blue or green series color is applied to the screws.**
- **The screw lock is applied to the screws that may get loose due to the vibrations and loads created by the use of machine or due to the vibrations created during transportation.**
- **If the screw lock coated screws are loosened or removed, be sure to apply a screw lock after the screws are tightened.**

B. Red-painted screws

NOTE

- **The screws which are difficult to be adjusted in the field are painted in red in order to prevent them from being removed by mistake.**
- **Do not remove or loosen any of the red-painted screws in the field. It should also be noted that, when two or more screws are used for a single part, only one representative screw may be marked with the red paint.**

C. Variable resistors on board

NOTE

- **Do not turn the variable resistors on boards for which no adjusting instructions are given in Adjustment/Setting.**

D. Removal of PWBs

⚠ CAUTION

- **When removing a circuit board or other electrical component, refer to "Handling of PWBs" and follow the corresponding removal procedures.**
- **The removal procedures given in the following omit the removal of connectors and screws securing the circuit board support or circuit board.**
- **Where it is absolutely necessary to touch the ICs and other electrical components on the board, be sure to ground your body.**

3.2 Disassembly/reassembly parts list

Section	Part name	Ref. page
Exterior parts	Front cover	P.5
	Right cover	P.6
	Staple unit cover	P.6
Units	Saddle unit	P.7
	Paper exit tray	P.10
	Staple unit	P.11
Board and etc.	SD drive board (SDDB)	P.12
	Leading edge stopper motor (M20)	P.13
	Upper paddle motor (M21)	P.14
	Lower paddle motor (M22)	P.15
	Center staple alignment motor/R (M23)	P.16
	Center staple alignment motor/F (M24)	P.17
	Center fold roller motor (M25)	P.18
	Center fold plate motor (M26)	P.18
	Leading edge grip solenoid (SD3)	P.19

3.3 Disassembly/reassembly procedure

3.3.1 Front cover

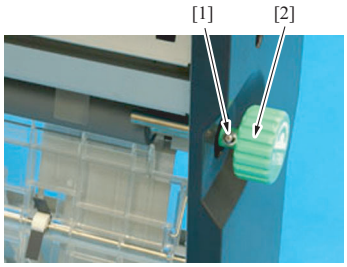

A10DF2C001DA

1. Remove the screw [1], and remove the jam clearing dial [2].

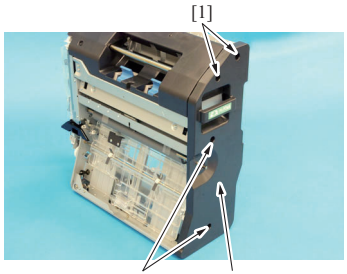

A10DF2C002DA

2. Remove four screws [1], and remove the front cover [2].
3. Reinstall the above parts following the removal steps in reverse.

3.3.2 Right cover

1. Remove the saddle unit.
See P.7

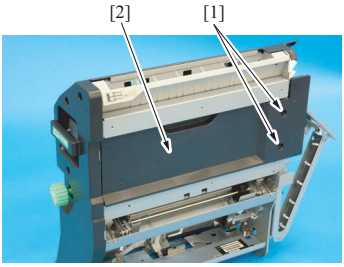

A10DF2C003DA

2. Remove two screws [1], and remove the right cover [2].

3. Reinstall the above parts following the removal steps in reverse.

3.3.3 Staple unit cover

1. Remove the saddle unit.
See P.7
2. Remove the front cover.
See P.5

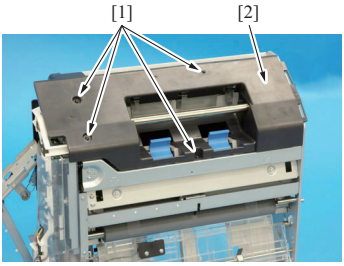

A10DF2C004DA

3. Remove four screws [1], and remove the staple unit cover [2].

4. Reinstall the above parts following the removal steps in reverse.

3.3.4 Saddle unit

⚠ CAUTION

- **Be careful not to catch your finger in the edge of the rail when mounting the saddle unit on the right rail for the saddle unit installation.**
- **Be careful not to jam your finger in the connecting section of the pantograph.**

1. Remove the finisher.
See P.14 of the FS-527 service manual.

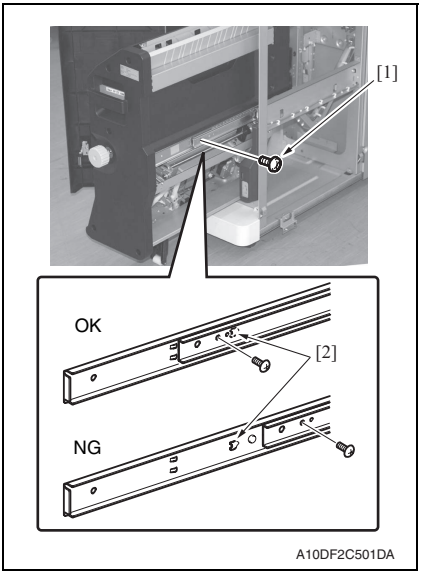

2. Open the front door of the finisher.
3. Pull out the saddle unit.
4. Remove the screw [1].

NOTE

- **For installation of the saddle unit, install the screw after confirming that the protruding portion of the rail [2] locates behind the screw hole.**

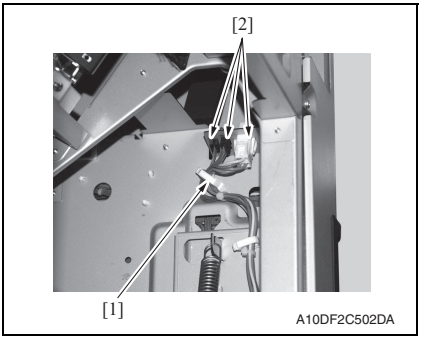

5. Remove the harness from the wire saddle [1].
6. Disconnect three connectors [2].

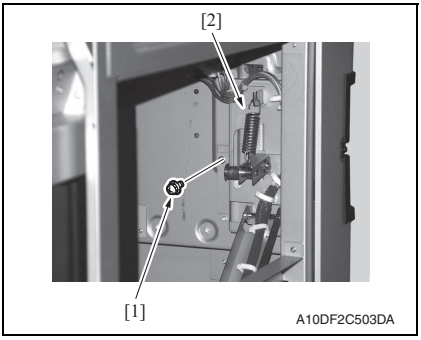

7. Remove the screw [1], and remove the pantograph [2].

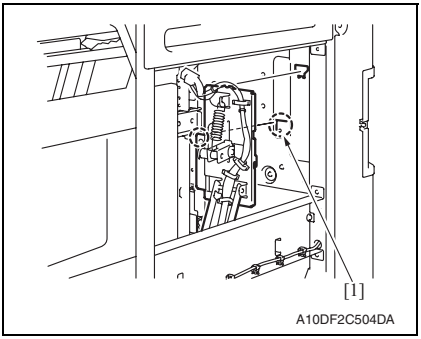

NOTE

- **For installation of the pantograph, insert two hooks on the pantograph of the saddle unit into the back holes inside the finisher referring the punch mark [1].**

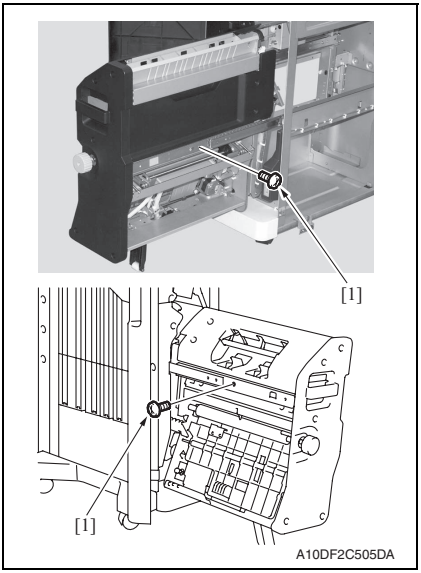

8. Remove two screws [1].

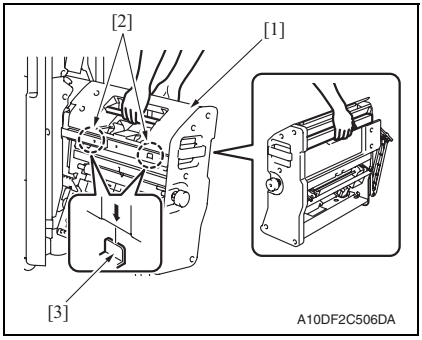

9. Grip the portion as shown in the illustration [1] to raise the saddle unit and take it out.

NOTE

- **For installation of the saddle unit, insert two hooks on the left rail [3] into the two holes of the saddle unit [2].**

10. Reinstall the above parts following the removal steps in reverse.

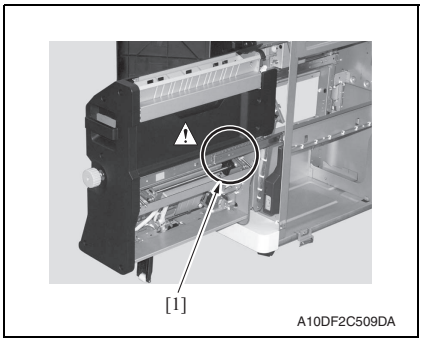

⚠ CAUTION

- **Be careful not to catch your finger in the edge of the rail [1] when mounting the saddle unit on the right rail for the saddle unit installation.**

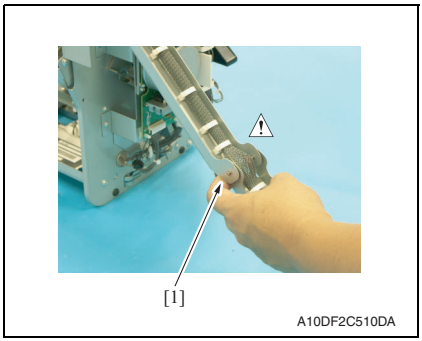

⚠ CAUTION

- **Be careful not to jam your finger in the connecting section of the pantograph [1].**

3.3.5 Paper exit tray

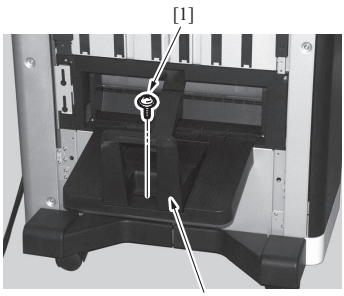

1. Remove the screw [1], and unlock the stopper [2].

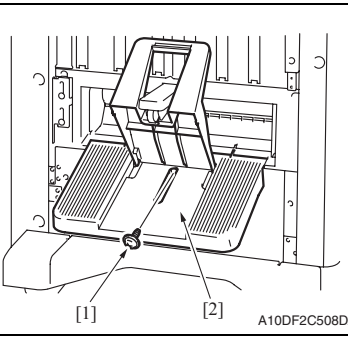

2. Remove the screw [1], and remove the paper exit tray [2].

3. Reinstall the above parts following the removal steps in reverse.

3.3.6 Staple unit

1. Remove the front cover.
See P.5
2. Remove the staple unit cover.
See P.6

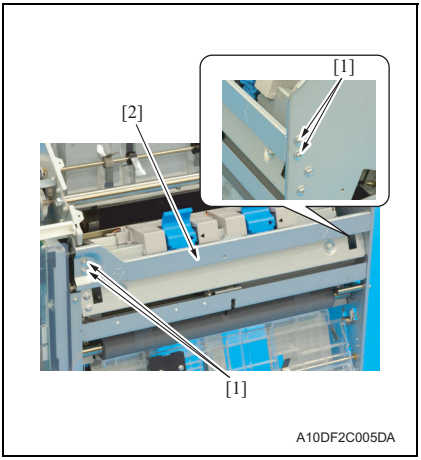

3. Remove four screws [1], and remove the plate [2].

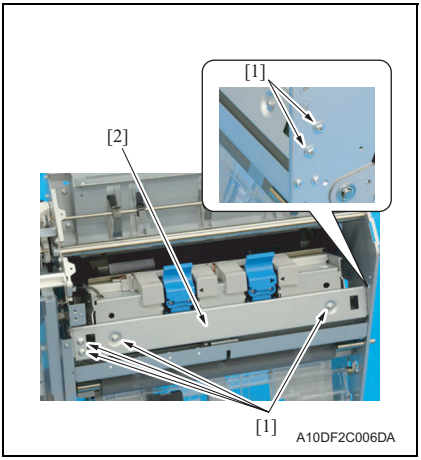

4. Remove six screws [1], and remove the plate [2].

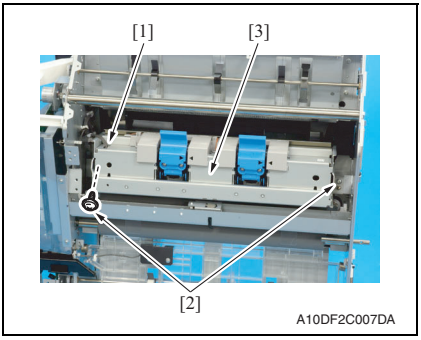

5. Disconnect the connector [1].
6. Remove two screws [1], and remove the staple unit [3].

7. Reinstall the above parts following the removal steps in reverse.

3.3.7 SD drive board (SDDB)

1. Remove the saddle unit.
See P.7
2. Remove the front cover.
See P.5
3. Remove the staple unit cover.
See P.6

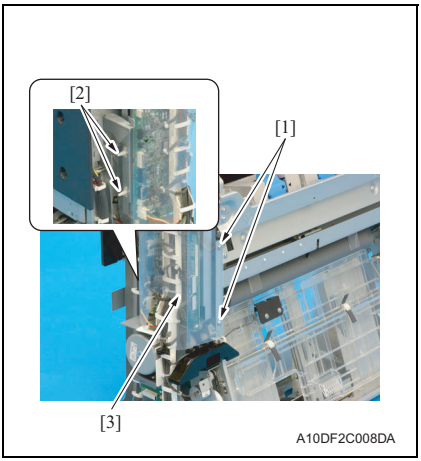

4. Remove two screws [1].
5. Remove the board support film [3] from two spacer [2].

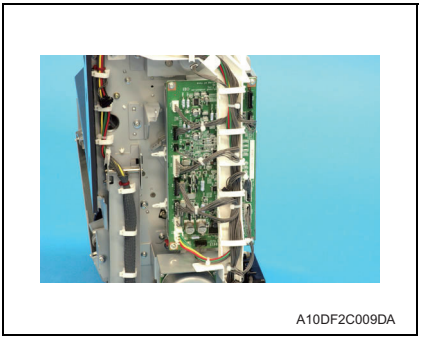

A10DF2C009DA

6. Disconnect all the twelve connectors from the SD drive board.

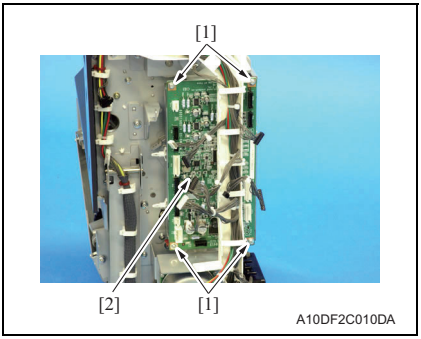

A10DF2C010DA

7. Remove four screws [1], and remove the SD drive board [2].

8. Reinstall the above parts following the removal steps in reverse.

3.3.8 Leading edge stopper motor (M20)

1. Remove the saddle unit.
See P.7

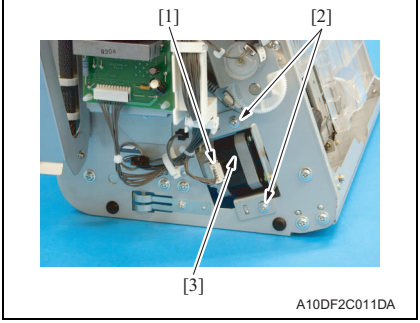

A10DF2C011DA

2. Disconnect the connector [1].
3. Remove two screws [2], and remove the leading edge stopper motor assy [3].

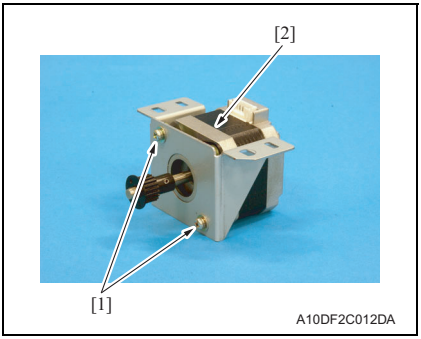

4. Remove two screws [1], and remove the leading edge stopper motor [2].

5. Reinstall the above parts following the removal steps in reverse.

3.3.9 Upper paddle motor (M21)

1. Remove the saddle unit.
See P.7

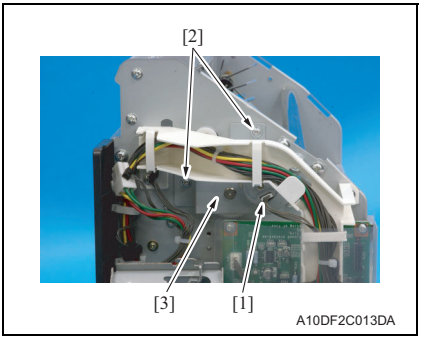

2. Disconnect the connector [1].
3. Remove two screws [2], and remove the upper paddle motor assy [3].

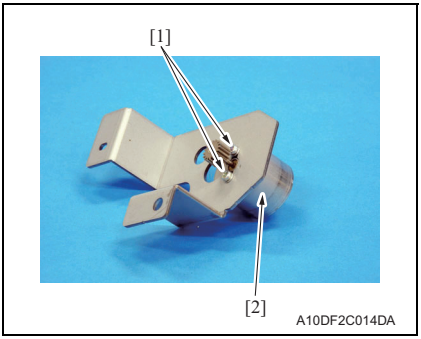

4. Remove two screws [1], and remove the upper paddle motor [2].

5. Reinstall the above parts following the removal steps in reverse.

3.3.10 Lower paddle motor (M22)

1. Remove the saddle unit.
See P.7

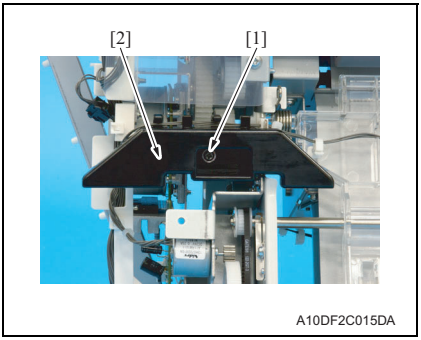

2. Remove the screw [1], and remove the paper exit tray guide [2].

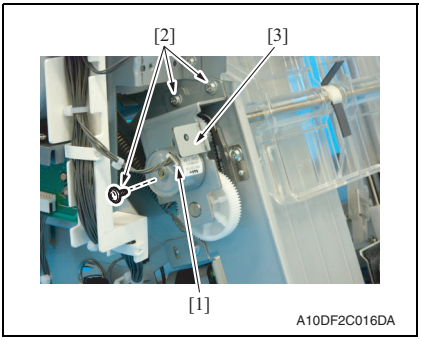

3. Disconnect the connector [1].
4. Remove three screws [2], and remove the lower paddle motor assy [3].

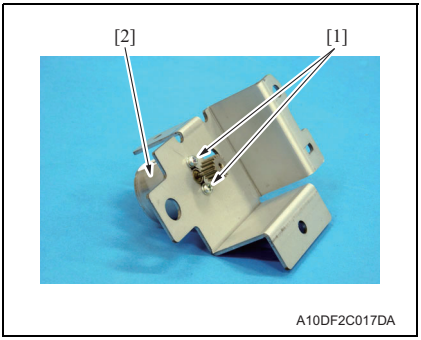

5. Remove two screws [1], and remove the lower paddle motor [2].

6. Reinstall the above parts following the removal steps in reverse.

3.3.11 Center staple alignment motor/R (M23)

1. Remove the saddle unit.
See P.7
2. Remove the right cover.
See P.6

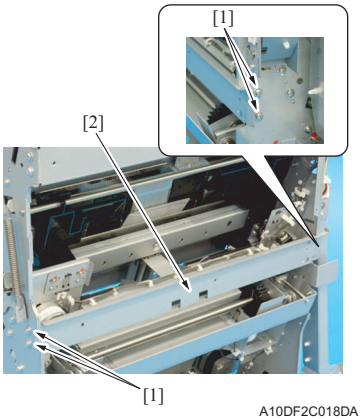

3. Remove four screws [1], and remove the plate [2].

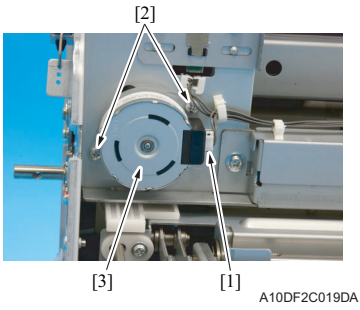

4. Disconnect the connector [1].
5. Remove two screws [2], and remove the center staple alignment motor/R [3].

6. Reinstall the above parts following the removal steps in reverse.

3.3.12 Center staple alignment motor/F (M24)

1. Remove the saddle unit.
See P.7
2. Remove the right cover.
See P.6

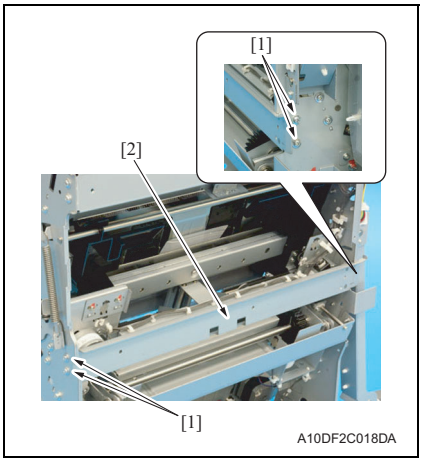

3. Remove four screws [1], and remove the plate [2].

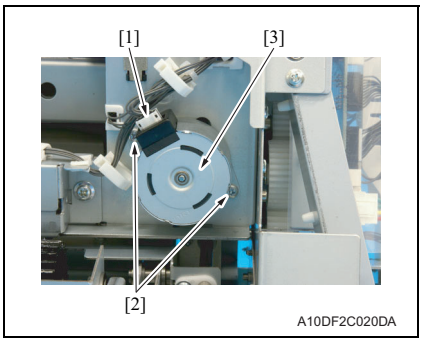

4. Disconnect the connector [1].
5. Remove two screws [2], and remove the center staple alignment motor/F [3].

6. Reinstall the above parts following the removal steps in reverse.

3.3.13 Center fold roller motor (M25)

1. Remove the saddle unit.
See P.7

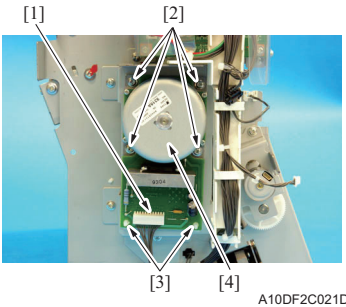

A10DF2C021DA

2. Disconnect the connector [1].
3. Remove four screws [2] and two card spacers [3], and remove the center fold roller motor [4].

4. Reinstall the above parts following the removal steps in reverse.

3.3.14 Center fold plate motor (M26)

1. Remove the saddle unit.
See P.7
2. Remove the leading edge stopper motor.
See P.13

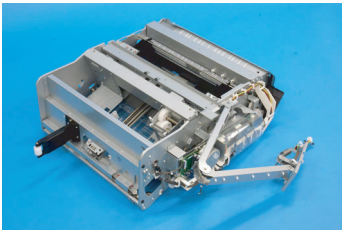
A10DF2C022DA

3. Lay down the saddle unit as shown in the illustration.

A10DF2C023DA

4. Disconnect the connector [1].

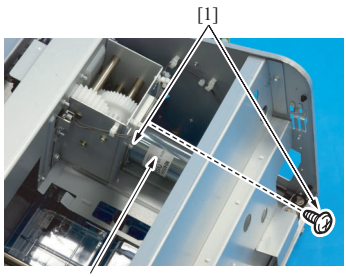

5. Remove two screws [1], and remove the center fold plate motor [2].

6. Reinstall the above parts following the removal steps in reverse.

3.3.15 Leading edge grip solenoid (SD3)

1. Remove the saddle unit.
See P.7

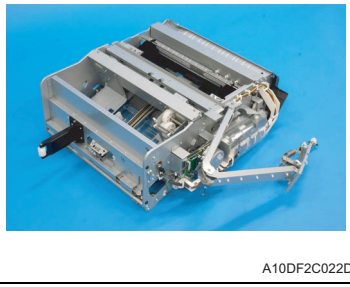

2. Lay down the saddle unit as shown in the illustration.

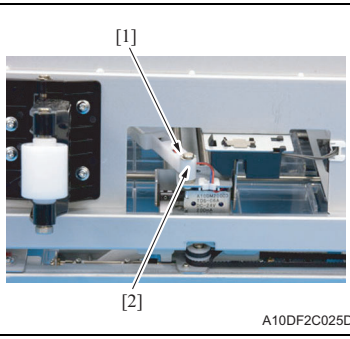

3. Remove the E-ring [1], and remove the drive lever [2].

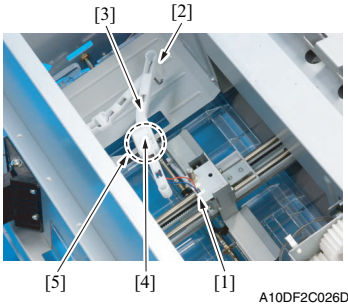

4. Remove the harness from the cord clamp [1].
5. Remove the C-clip [2], and remove the drive lever [3].
6. Remove the tape [4], and disconnect the connector [5].

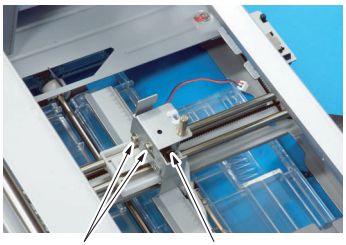

7. Remove two screws [1], and remove the leading edge grip solenoid [2].

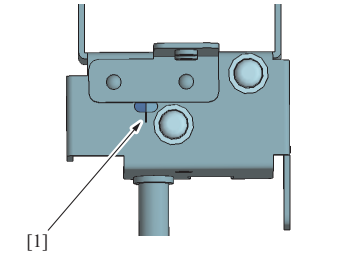

8. Reinstall the above parts following the removal steps in reverse.

NOTE

- **Secure the plate edge section of the leading edge grip solenoid by fitting the mark-off line [1].**

ADJUSTMENT/SETTING

4. HOW TO USE THE ADJUSTMENT SECTION

- "Adjustment/Setting" contains detailed information on the adjustment items and procedures for this machine.
- Throughout this "Adjustment/Setting," the default settings are indicated by " ".

Advance checks

Before attempting to solve the customer problem, the following advance checks must be made. Check to see if:

- The power supply voltage meets the specifications.
- The power supply is properly grounded.
- The machine shares the power supply with any other machine that draws large current intermittently (e.g., elevator and air conditioner that generate electric noise).
- The installation site is environmentally appropriate: high temperature, high humidity, direct sunlight, ventilation, etc.; levelness of the installation site.
- The original has a problem that may cause a defective image.
- The density is properly selected.
- The original glass, slit glass, or related part is dirty.
- Correct paper is being used for printing.
- The units, parts, and supplies used for printing (developer, PC drum, etc.) are properly replenished and replaced when they reach the end of their useful service life.
- Toner is not running out.

⚠ CAUTION

- **Be sure to unplug the power cord of the machine before starting the service job procedures.**
- **If it is unavoidably necessary to service the machine with its power turned ON, use utmost care not to be caught in the scanner cables or gears of the exposure unit.**
- **Special care should be used when handling the fusing unit which can be extremely hot.**
- **The developing unit has a strong magnetic field. Keep watches and measuring instruments away from it.**
- **Take care not to damage the PC drum with a tool or similar device.**
- **Do not touch IC pins with bare hands.**

5. MECHANICAL ADJUSTMENT

5.1 Mechanical adjustment of the paper exit section

5.1.1 Half-fold skew adjustment

This adjustment must be made in the following case:
- **Fold line goes off the tolerance in the half-fold mode.**

A. Procedure

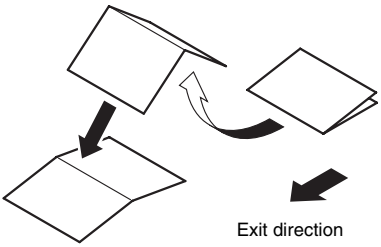

1. Make a copy in the half-fold mode.
2. Unfold the paper that exits the machine and lay the paper with the ridge facing up.

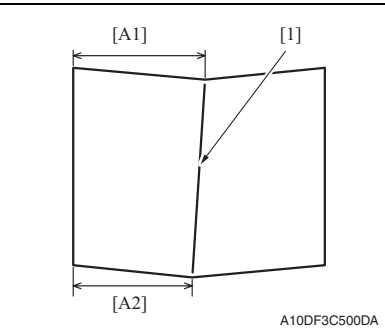

3. Confirm the skew of the fold line [1] of the output copy sample (Widths of A1 and A2)
   Standard value : A1-A2=0±1.0 mm
4. In case the figure exceeds the above mentioned standard value, follow the adjustment procedures below.

5. Open the front door of the finisher.
6. Pull the saddle unit.

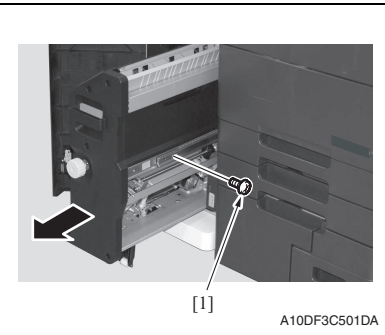

7. Remove the screw [1], and pull the saddle unit out completely.

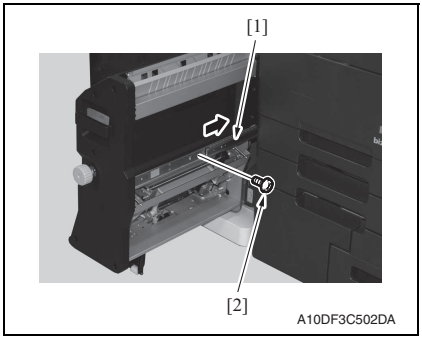

8. Slide down the movable part [1] of the right rail and remove the screw [2].

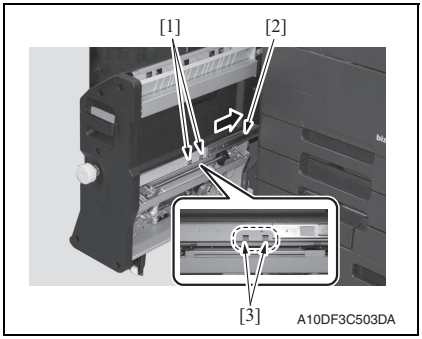

9. Push down the right rail [2] until the two notches [1] are visible as shown in the illustration below.

10. Loosen two screws [3].

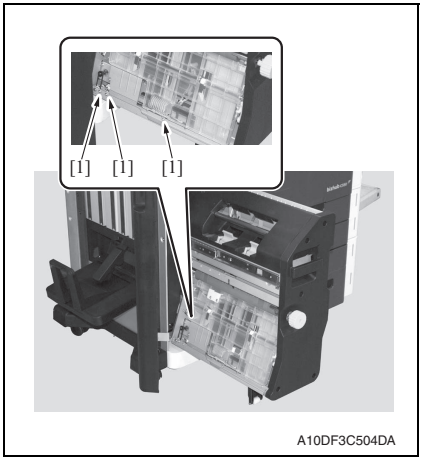

11. Loosen three screws [1].

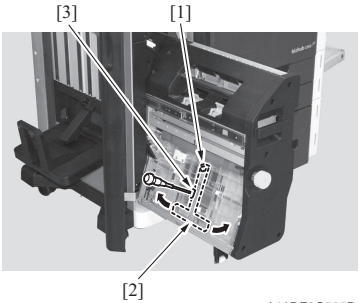

A10DF3C505DA

12. Incline the stopper [2] forward or backward according to the skew of the crease using the shoulder screw [1] as the supporting point.

NOTE

- **Push the driver or equivalent into the cover hole [3] to incline the stopper [2].**

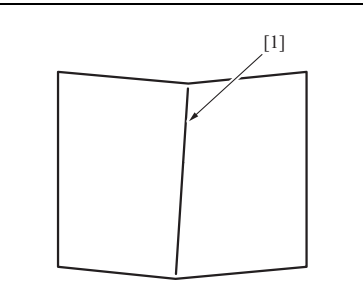

A10DF3C506DA

- In case the cease [1] skews as shown in the illustration:
  Incline the stopper backward.

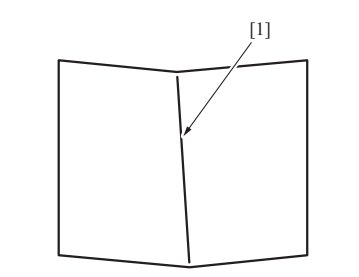

A10DF3C507DA

- In case the cease [1] skews as shown in the illustration:
  Incline the stopper forward.

13. Make the copy sample again to confirm the cease skew.

14. Reinstall the above parts following the removal steps in reverse.

KONICA MINOLTA

SERVICE MANUAL

FIELD SERVICE

JS-603

2009.07

KONICA MINOLTA BUSINESS TECHNOLOGIES, INC. Ver. 1.0

Revision history

After publication of this service manual, the parts and mechanism may be subject to change for improvement of their performance.
Therefore, the descriptions given in this service manual may not coincide with the actual machine.

When any change has been made to the descriptions in the service manual, a revised version will be issued with a revision mark added as required.

Revision mark:

- To indicate clearly a section revised, is shown at the left margin of the revised section.
  The number inside represents the number of times the revision has been made.

- To indicate clearly a page that contains the revision, is shown near the page number of the corresponding page.
  The number inside represents the number of times the revision has been made.

NOTE

Revision marks shown in a page are restricted only to the latest ones with the old ones deleted.

- When a page revised in Ver. 2.0 has been changed in Ver. 3.0:
  The revision marks for Ver. 3.0 only are shown with those for Ver. 2.0 deleted.
- When a page revised in Ver. 2.0 has not been changed in Ver. 3.0:
  The revision marks for Ver. 2.0 are left as they are.

Date	Service manual Ver.	Revision mark	Descriptions of revision
2009/07	1.0	—	Issue of the first edition

CONTENTS

JS-603

OUTLINE

1. PRODUCT SPECIFICATIONS 1

MAINTENANCE

2. PERIODICAL MAINTENANCE PROCEDURE 3
3. OTHER MAINTENANCE ITEM 4
3.1 Items not allowed to be disassembled and adjusted 4
3.2 Disassembly/reassembly parts list 5
3.3 Disassembly/reassembly procedure 5
3.3.1 Separator 5
3.3.2 Tray3 exit roller retraction motor (M17) 6

Blank Page

OUTLINE

1. PRODUCT SPECIFICATIONS

A. Type

Type	Fixed to the finisher
Document alignment	Center

B. Functions

Modes	Sort, group

C. Paper

Size	Type		Capacity
A5S, B5S/B5, A4S/A4, B4, A3, A3 Wide 5-1/2 X 8-1/2S, 8-1/2 X 11S/8-1/2 X 11, 8-1/2 X 14, 11 X 17, 12-1/4 X 18 Max.: 311.15 mm X 457.2 mm 12.25 inch X 18 inch Min.: 139.7 mm X 182 mm 5.5 inch X 7.17 inch	Plain paper (64 to 90 g/m²) (17 to 24 lb)		100 sheets
	Special paper	Thick paper 1 (91 to 120 g/m²) (24.25 to 32 lb)	10 sheets
		Thick paper 1+ (121 to 157 g/m²) (24.25 to 41.75 lb)	
		Thick paper 2 (158 to 209 g/m²) (42 to 55.5 lb)	
		Thick paper 3 (210 to 256 g/m²) (55.75 to 68 lb)	
		Thick paper 4 (257 to 300 g/m²) (68.25 to 80 lb)	
		OHP film	
		Label	
		Envelope	

D. Machine specifications

Power requirements	DC 24 V ± 10 % (supplied from the main body)
	DC5 V ± 5 %
Dimensions	165 mm (W) X 389 mm (D) X 63 mm (H) 6.5 inch (W) X 15.31 inch (D) X 2.48 inch (H)
Weight	1.0 kg (2.2 lb)

E. Operating environment

- Conforms to the operating environment of the main body.

NOTE

- **These specifications are subject to change without notice.**

Blank Page

MAINTENANCE

2. PERIODICAL MAINTENANCE PROCEDURE

- Periodically replaced parts are not employed.

3. OTHER MAINTENANCE ITEM

3.1 Items not allowed to be disassembled and adjusted

A. Paint-locked screws

NOTE

- **To prevent loose screws, a screw lock in blue or green series color is applied to the screws.**
- **The screw lock is applied to the screws that may get loose due to the vibrations and loads created by the use of machine or due to the vibrations created during transportation.**
- **If the screw lock coated screws are loosened or removed, be sure to apply a screw lock after the screws are tightened.**

B. Red-painted screws

NOTE

- **The screws which are difficult to be adjusted in the field are painted in red in order to prevent them from being removed by mistake.**
- **Do not remove or loosen any of the red-painted screws in the field. It should also be noted that, when two or more screws are used for a single part, only one representative screw may be marked with the red paint.**

C. Variable resistors on board

NOTE

- **Do not turn the variable resistors on boards for which no adjusting instructions are given in Adjustment/Setting.**

D. Removal of PWBs

⚠ CAUTION

- **When removing a circuit board or other electrical component, refer to "Handling of PWBs" and follow the corresponding removal procedures.**
- **The removal procedures given in the following omit the removal of connectors and screws securing the circuit board support or circuit board.**
- **Where it is absolutely necessary to touch the ICs and other electrical components on the board, be sure to ground your body.**

3.2 Disassembly/reassembly parts list

Section	Part name	Ref. page
Unit	Separator	P.5
Others	Tray3 exit roller retraction motor (M17)	P.6

3.3 Disassembly/reassembly procedure

3.3.1 Separator

1. Remove the horizontal transport unit.
See P.15 of the FS-527 service manual.

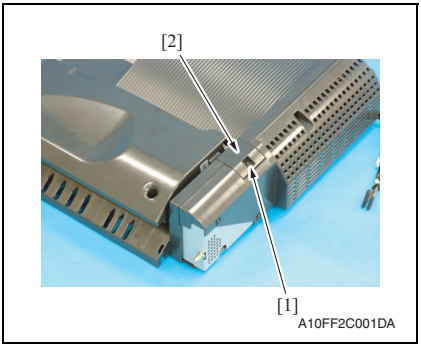

2. Remove two screws [1], and remove the cover [2].

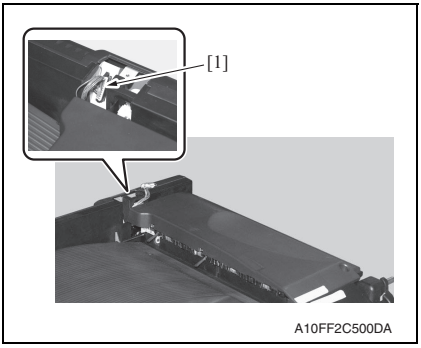

3. Disconnect the connector [1].

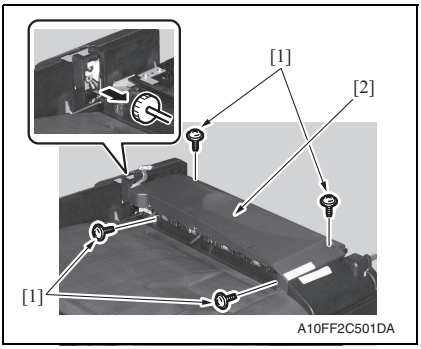

4. Remove four screws [1], and remove the separator [2].
5. Reinstall the above parts following the removal steps in reverse.

3.3.2 Tray3 exit roller retraction motor (M17)

1. Remove the separator.
See P.5

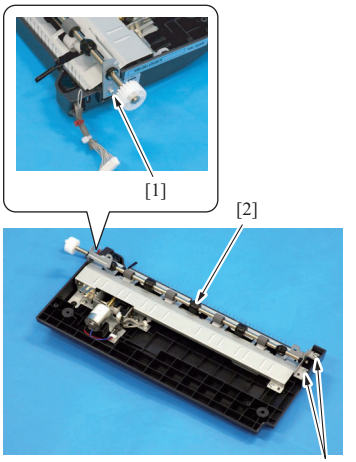

2. Remove three screws [1], and remove the exit roller assy [2].

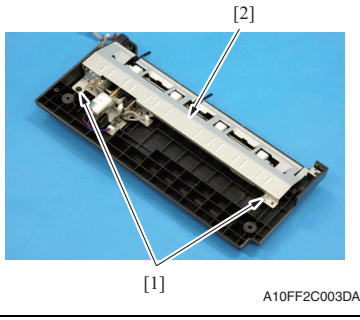

3. Remove two screws [1], and remove the plate [2].

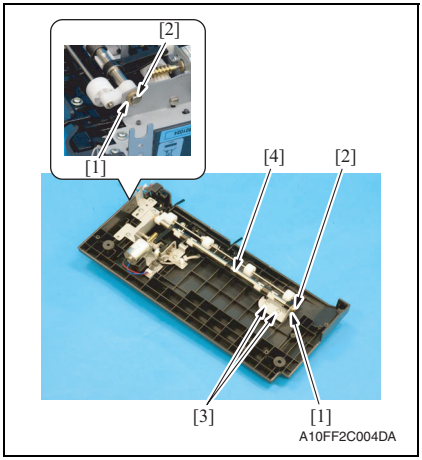

4. Remove two E-rings [1] and two bushings [2].
5. Remove two screws [3], and remove the exit rolls assy [4].

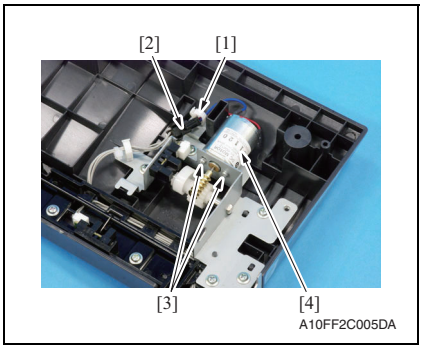

6. Remove the harness from the wire saddle [1].
7. Disconnect the connector [2].
8. Remove two screws [3], and remove the tray3 exit roller retraction motor [4].

9. Reinstall the above parts following the removal steps in reverse.

Blank Page

KONICA MINOLTA

© 2009 KONICA MINOLTA BUSINESS TECHNOLOGIES, INC.

Use of this manual should be strictly supervised to avoid disclosure of confidential information.

Printed in Japan
DDA0P0-M-FE2